UNIMOTION

CTL

LINEAR UNIT WITH A LINEAR MOTOR

GERMAN DESIGN AWARD WINNER 2022



About Us

UNIMOTION is a leading company in the industrial automation field, at a global level. Combining innovative engineering solutions – Unimotion helps companies of all sizes across a wide range of industrial segments. Unimotion develops Industry 4.0-enabled products and systems with leading quality, performance and value. Engineering, Production, Construction, Warehouse, Research & Development department; all this can be found under one roof. Thanks to years of experience and a consistent focus on automation technology, we are continually improving our products and implementing innovations that provide customers with many technical advantages. Our core values are precision, innovation, passion, and integrity. At Unimotion, our main goal is the satisfaction of every single customer with a commitment to deliver the impossible.

Unimotion sales team, technicians and experts are at your disposal to provide customized expertise and support. We look forward to meeting you and work on your special project.

Follow UNIMOTION on different social platforms and subscribe to our latest news

Table of Contents

Linear unit – CTL 4

Characteristics 5
Structural design 6
How to order 7
Technical data 8
Dimensions 14
Accessories 19

Electrical data 20

CTL connectors 21
Linear motors 21
Measuring systems 22
IIoT module 22
Hall sensor 22

Accessories 23

Clamping fixtures 24
Connection elements 25
Connection plates 26
Magnetic field sensor 27
Energy chain 28

Service life 29

Linear guiding 30

Linear unit – CTL

Characteristics 5
Structural design 6
How to order 7
Technical data 8
Dimensions 14
Accessories 19

CHARACTERISTICS

CTL is a linear unit with an integrated high-performance UNIMOTION linear motor. High accuracy is achieved using a precision low noise linear guiding system while the linear motor enables extremely high dynamic movements.

Using innovative UNIMOTION linear motor drive enables the unit to achieve speeds up to 5 m/s and offer the highest acceleration among all of our linear units.

Due to the linear motor drive, the CTL linear units are backlash-free.

The CTL linear units offer a range of different built-in incremental and absolute measurement systems.

The combination of the linear motor drive and the measurement systems offer a repeatability precision of up to 0,001 mm.

CTL linear units are designed to be as compact as possible with no compromise to high performance. This makes them perfect for a wide range of different applications.

As an option, a standard energy chain can be added to the unit. The standard energy chain is specifically suited to operate in highly dynamic and low noise applications thanks to a special link design.

A corrosion-resistant protection strip shields the inside of the unit from environmental influences such as dirt or particles. The innovative tensioning solution offers perfect alignment of the protection cover even on long strokes and high accelerations

The anodized aluminium profile body has side slots for the clamping fixtures and the magnetic field sensors.

A central lubrication port located on both sides of the carriage enables simple relubrication and provides easy maintenance.

The aluminium profiles are manufactured according to the EN 12020-2 standard

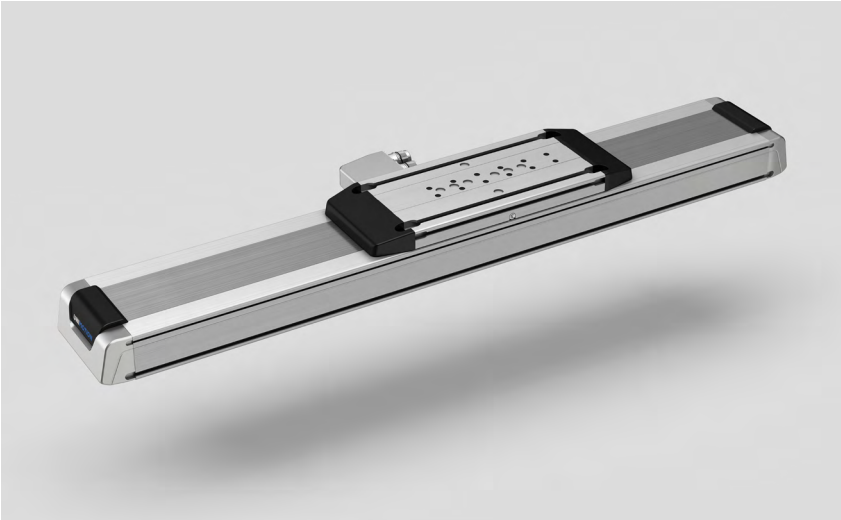



STRUCTURAL DESIGN

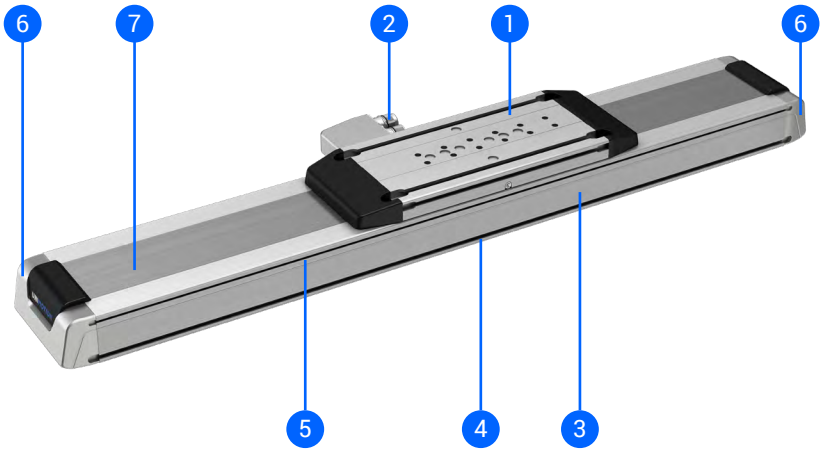

1 – Carriage
2 – Motor and encoder connectors (IIoT connector optional)
3 – Aluminium base profile
4 – Slot for mounting
5 – Slot for the magnetic field sensors
6 – End block with the protection strip tensioning system
7 – Corrosion-resistant protection strip
8 – Standard energy chain
9 – Energy chain holder
10 – Energy chain support profile

With a preassebled standard energy chain

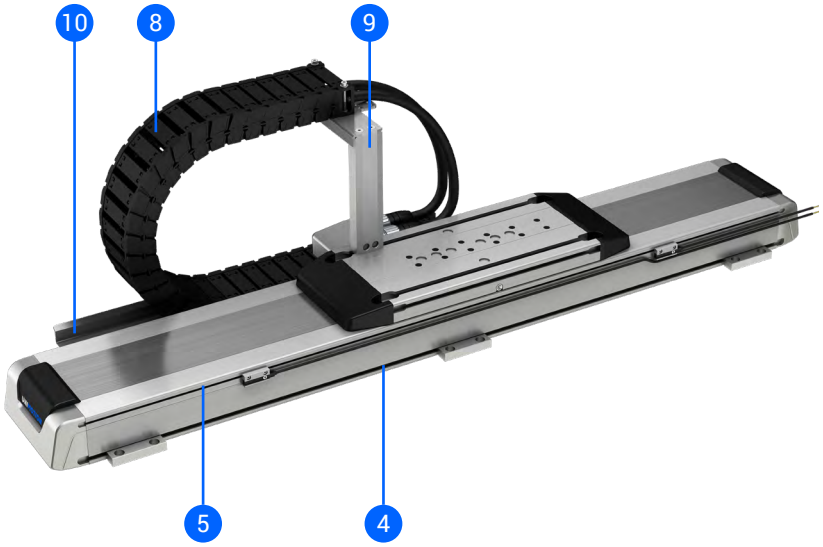

In order to improve the products in this catalogue the specifications are subject to change without notice.

HOW TO ORDER

CTL - 145 - 3000 - S1LC - 10 - BCCA - 1 - B

Series:
CTL

Size:
– 145
– 200
– 250

Absolute stroke [mm]:
(Absolute stroke = Effective stroke + 2 × Safety stroke)

Carriage version:
– S: Short
– L: Long

Protection cover:
– 0: Without
– 1: Corrosion-resistant protection strip

Speed class:
– L: Low speed
– H: High speed

CTL 145 is available only with a low speed class.

Magnet plates:
– C: Classic
– H: High performance (Available soon)

Connector orientation:
– 1: Backward
– 2: Forward

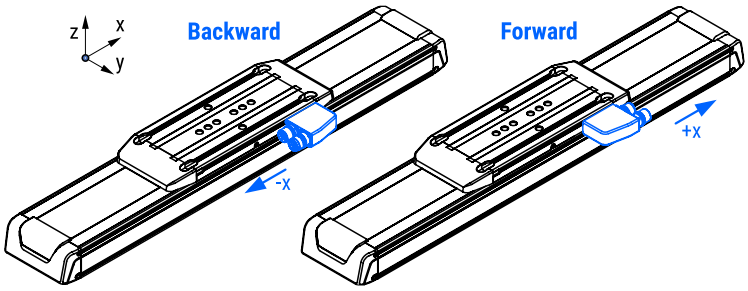

The linear unit is symmetrical, therefore the placement of the connectors on the other side of the carriage can be achieved by rotating the unit along its Z axis.

IIoT connection:
– 0: Without
– 1: With (Available soon)

Measuring system:
– A: Magnetic incremental
– B: Magnetic absolute

For possible encoder coding combinations plese check the table on the right.

Connector orientiation also determines the energy chain mounting direction.
For more information please refer to the dimensional drawing in the section section “Dimensions”.
For technical information please refer to the section “Accessories → Energy chain”.

Energy chain:
– 0: Without
– A: 28 × 70
– B: 28 × 100

Available for absolute stroke of up to 4800 mm. For technical information please refer to the section “Accessories → Energy chain → Technical data”

When IIoT connection is selected, Hall sensor is selected automatically. If an absolute measuring system is selected the Hall sensor is not available.

Hall sensor:
– 0: Without
– 1: With

Manufacturer of measuring system:
– A

Resolution:
– A: 0,01
– B: 0,005
– C: 0,000977
– D: Depending on the drive

Communication:
– A: Digital RS422 / TTL 5V
– B: Analog 1 Vpp
– C: Digital BiSS-C

Type	Communication	Resolution [mm]	Max speed	Order code[2]
Magnetic incremental	Digital RS422/ TTL 5V	0,005	4,67	AAB
	Digital RS422/ TTL 5V	0,01	9,33	AAA
	Analog 1 Vpp	[1]	80	ABD
Magnetic absolute	Digital BiSS-c	0,000977	7	BCC

[1] Resolution is drive dependant
[2] Order code fields: Measuring system, Communication, Resolution

TECHNICAL DATA

General technical data

CTL	Carriage version	Dynamic load capacity[1]	Dynamic moments[1]			Max. permissible loads					Max. repeatability[2]	Min. stroke[3]	Max. stroke[4]	Dimensions	
						Forces		Moments						Width[5]	Height[6]
		C [N]	$M_{dyn\,x}$ [Nm]	$M_{dyn\,y}$ [Nm]	$M_{dyn\,z}$ [Nm]	F_{py} [N]	F_{pz} [N]	M_{px} [Nm]	M_{py} [Nm]	M_{pz} [Nm]	[mm]	[mm]	[mm]	[mm]	[mm]
145	S	45810	2220	3770	3770	9070	8125	450	630	750	up to ±0,001	40	5970	145	85
	L	61080	2960	5970	5970	12090	13070	510	1915	1185		40	5880		
200	S	75050	5140	6730	6730	15410	13105	955	1015	1385		55	5935	200	107
	L	100060	6850	10630	10630	20545	17970	1205	2760	2015		55	5850		
250	S	109160	9600	10600	10600	22390	26605	2570	2590	2175		60	5900	250	119
	L	145550	12800	16930	16930	29855	38845	3635	5665	3475		60	5800		

[1] Dynamic load capacity and dynamic moments of the linear guiding system. These values are the basis for calculating the service life.
There should be noted that some pretension of the linear guides due to the attraction force of the linear motor is always present in the guiding system.
For more information regarding this pretension, please refer to the section "Service life".
[2] Depends on the measuring system.
[3] For shorter strokes, please contact us.
[4] For longer strokes, please contact us.
[5] Max. width of the linear unit without the connectors on the carriage.
[6] Height of the linear unit from the bottom of the profile to the top of the carriage.

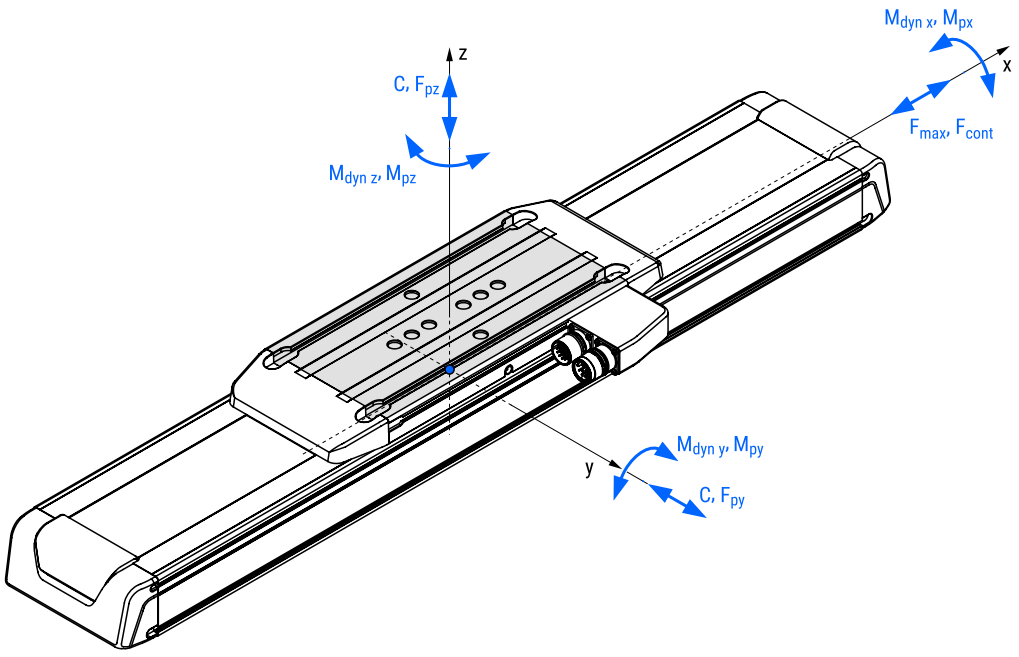

In order to improve the products in this catalogue the specifications are subject to change without notice.

Drive data

CTL	Carriage version	Speed class	Linear motor[1]	Maximum axial load[4, 5]	Continuous axial load[4]	Frictional force of the carriage without load	Max. travel speed[3]	Max. acceleration[2]
				F_{max} [N]	F_{cont} [N]	F_0 [N]	v_{max} [m/s]	[m/s²]
145	S	Low speed	LMCA 30 M L	550	250	45	5,0	90
	L	Low speed	LMCA 30 L L	825	375	55	5,0	
200	S	Low speed	LMCA 60 M L	1105	500	65	5,0	
		High speed	LMCA 60 M H					
	L	Low speed	LMCA 60 L L	1650	750	85	5,0	
		High speed	LMCA 60 L H					
250	S	Low speed	LMCA 90 M L	1655	750	85	4,1	
		High speed	LMCA 90 M H				5,0	
	L	Low speed	LMCA 90 L L	2475	1125	105	4,1	
		High speed	LMCA 90 L H				5,0	

[1] In combination with the standard magnetic plate. For more information regarding the linear motors, please refer to the Unimotion documentation related to the linear motors.
[2] Maximum acceleration of the linear unit with the protection cover is limited to 50 m/s².
The lower value (the one specified in the table or the limit value stated here) must be considered.
[3] Maximum travel speed depends of the supply voltage of the linear motor.
[4] Maximum and continuous axial loads depend on the travel speed, see the following diagram.
[5] For a time peiod of 1 second at 20 °C.

Operating conditions

Ambient temperature	+5 °C ~ +40 °C
Protection class	IP40[1]
Duty cycle	100 %

[1] If the protection strip is used, otherwise IP20 should be considered.

Recommended values of loads:

All the data of the dynamic load capacities (of the linear guiding system) stated in the tables above are theoretical without considering any safety factor. The safety factor depends on the application and its requested safety and service life.

We recommend a minimum dynamic safety factor of 5,0 or more. Please refer to page 30, where the calculation of the safety factor of the linear guiding system and how the applied load affects the service life are presented.

Pretension of the linear guiding system due to the attraction force of the linear motor is also presented.

Mass of the linear unit

CTL	Carriage version	Moved mass[1]	Mass of the linear unit[2]							
			With the protection cover				Without the protection cover			
		$m_{m, CTL}$ [kg]	m_{CTL} [kg]				m_{CTL} [kg]			
145	S	5,50	12,20	+	0,0129	× Abs. stroke	12,03	+	0,0125	× Abs. stroke
	L	7,35	15,30	+	0,0129	× Abs. stroke	15,09	+	0,0125	× Abs. stroke
200	S	9,70	21,95	+	0,0234	× Abs. stroke	21,70	+	0,0230	× Abs. stroke
	L	12,80	27,20	+	0,0234	× Abs. stroke	26,94	+	0,0230	× Abs. stroke
250	S	14,45	31,70	+	0,0323	× Abs. stroke	31,42	+	0,0318	× Abs. stroke
	L	19,25	39,95	+	0,0323	× Abs. stroke	39,58	+	0,0318	× Abs. stroke

[1] The moved mass is already considered in the equation for calculating the mass of the linear unit m_{CTL}. The moved mass includes the mass of the carriage together with the forcer and linear guides. For the option of the linear unit with a standard energy chain, the moved mass $m_{m, CTL}$ should be increased by $m_{m,ec}$, see the table below.
[2] Valid for the linear unit without the standard energy chain. For the option of the linear unit with a standard energy chain, the mass m_{CTL} should be increased by m_{ec}, see the table below.

Abs. stroke	Absolute stroke	[mm]

Additional mass of the linear unit when the standard energy chain is selected.

CTL	Energy chain size[1]	Mass of the energy chain set[2]				Max. moved mass[3]			
	$h_{ec} \times w_{ec}$ [mm]	m_{ec} [kg]				$m_{m, ec}$ [kg]			
145	28 × 70	1,40	+	0,00172	× Abs. stroke	1,05	+	0,00060	× Abs. stroke
	28 × 100	1,59	+	0,00198	× Abs. stroke	1,17	+	0,00069	× Abs. stroke
200	28 × 70	1,39	+	0,00183	× Abs. stroke	1,01	+	0,00060	× Abs. stroke
	28 × 100	1,58	+	0,00210	× Abs. stroke	1,13	+	0,00069	× Abs. stroke
250	28 × 70	1,39	+	0,00191	× Abs. stroke	1,00	+	0,00060	× Abs. stroke
	28 × 100	1,58	+	0,00218	× Abs. stroke	1,12	+	0,00069	× Abs. stroke

[1] Internal height and width of the standard energy chain.
[2] The mass m_{ec} refers to the mass that is added to the mass of the linear unit m_{CTL} if the standard energy chain option is selected.
[3] Max. moved mass $m_{m, ec}$ includes the complete mass of the energy chain and its holder. This mass should be added to the moved mass of the linear unit $m_{m, CTL}$ if the standard energy chain is selected.

Abs. stroke	Absolute stroke	[mm]

For more information regarding the energy chains, please refer to the section “Accessories → Energy chain”.

Planar moment of inertia

CTL	CTL profile	
	I_y [cm⁴]	I_z [cm⁴]
145	74,7	620,6
200	184,8	2087,3
250	339,6	4485,2

Deflection of the linear unit as a function of vertical force and unsupported profile length

In the following diagrams, the deflection of the linear unit as a function of the vertical force and unsupported profile length is presented. For the case, the linear unit is mounted to the bottom of the profile, see the diagrams on the left. For the case, the linear unit is mounted on its side, see the right column of the diagrams.

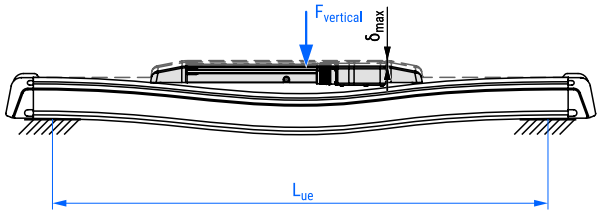

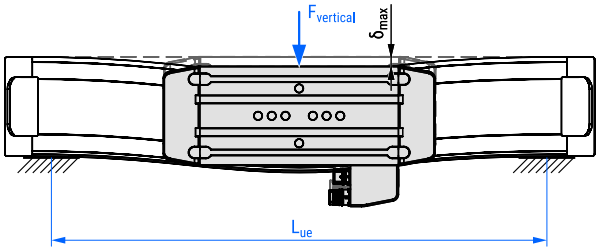

In order to improve the products in this catalogue the specifications are subject to change without notice.

CTL 145

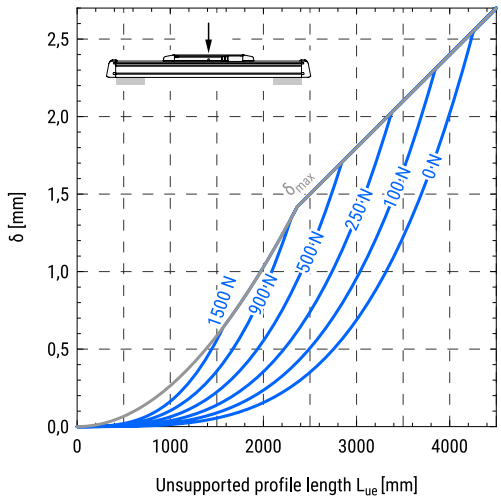

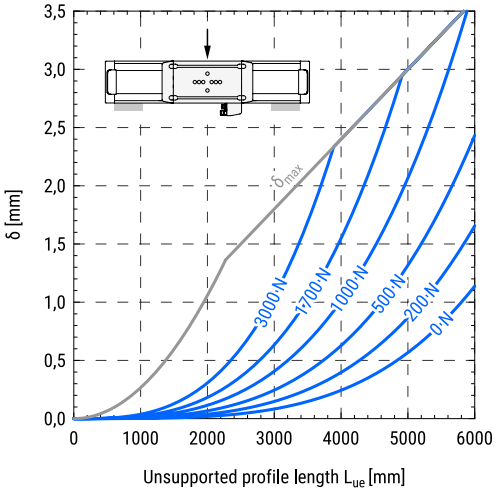

CTL 200

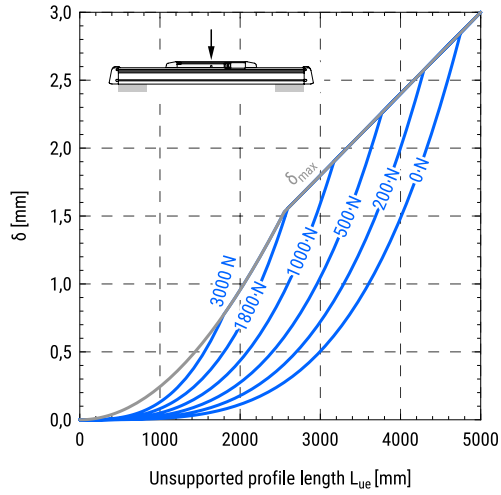

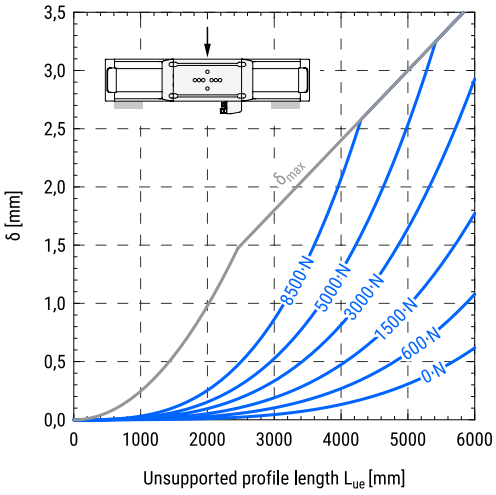

CTL 250

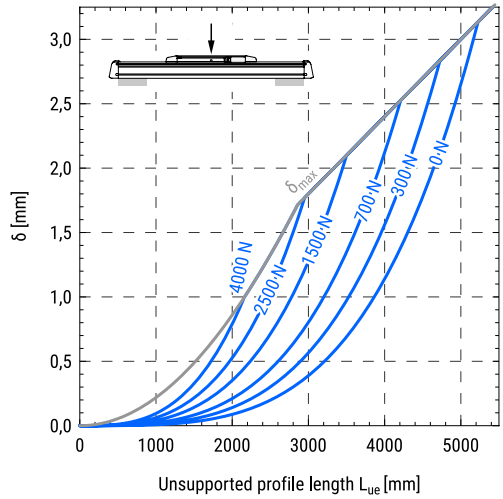

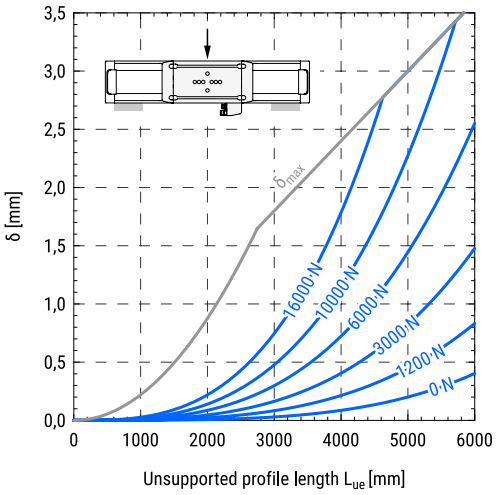

Maximum axial load as a function of travel speed of the carriage

In the folowing diagrams, the maximum axial loads aplied to the carriage as a function of travel speed for different voltages are presented.

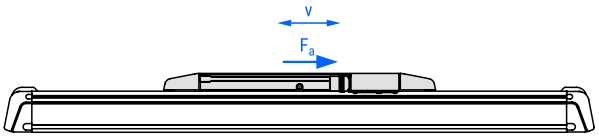

CTL 145 S Low speed

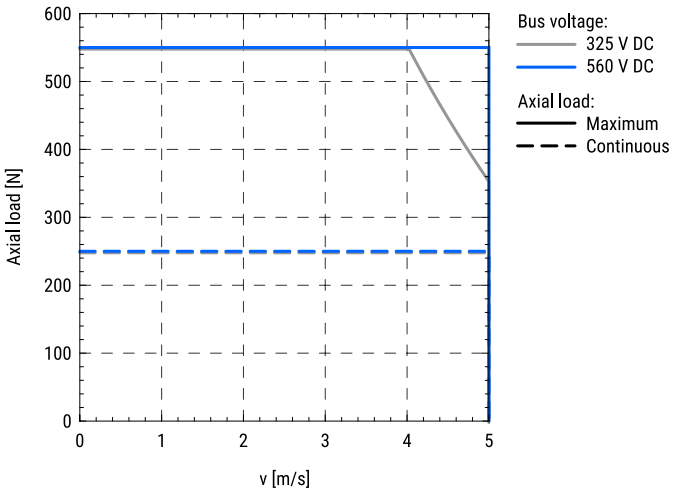

CTL 145 L Low speed

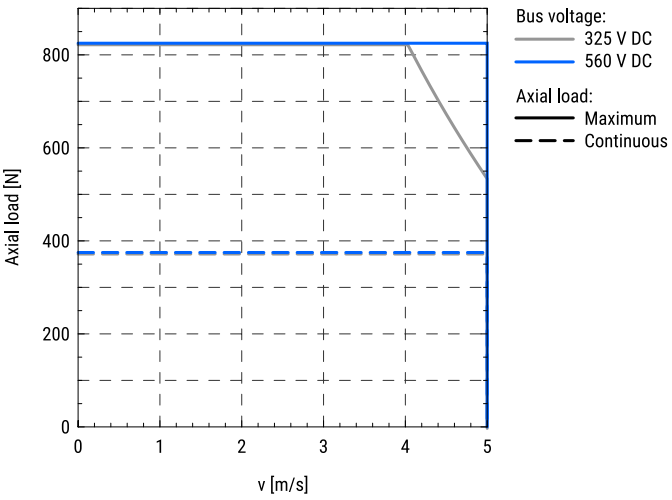

CTL 200 S Low speed

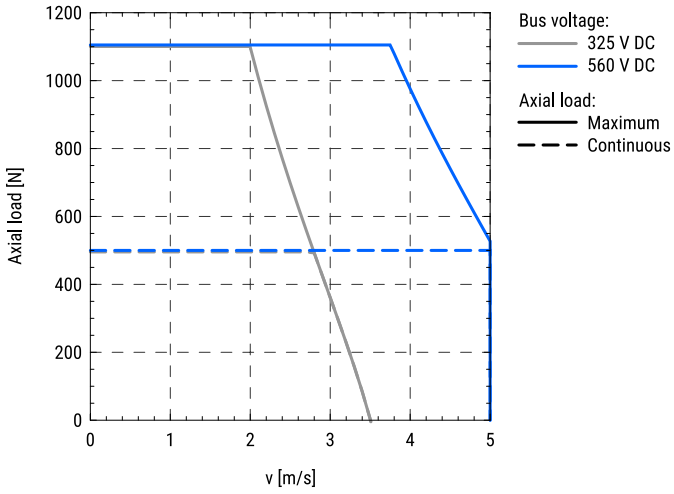

CTL 200 S High speed

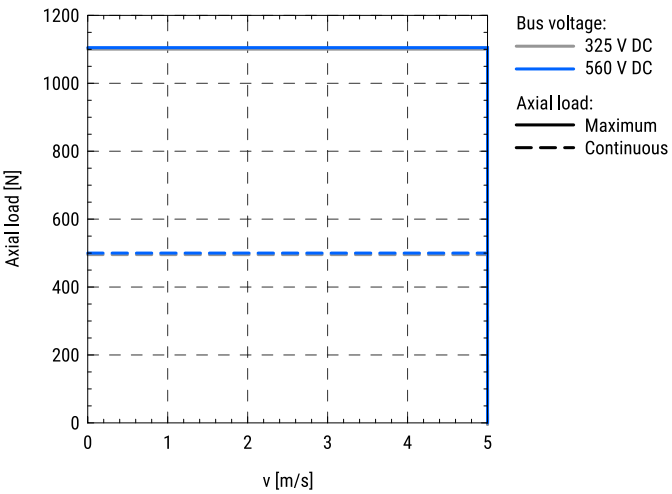

In order to improve the products in this catalogue the specifications are subject to change without notice.

CTL 200 L Low speed

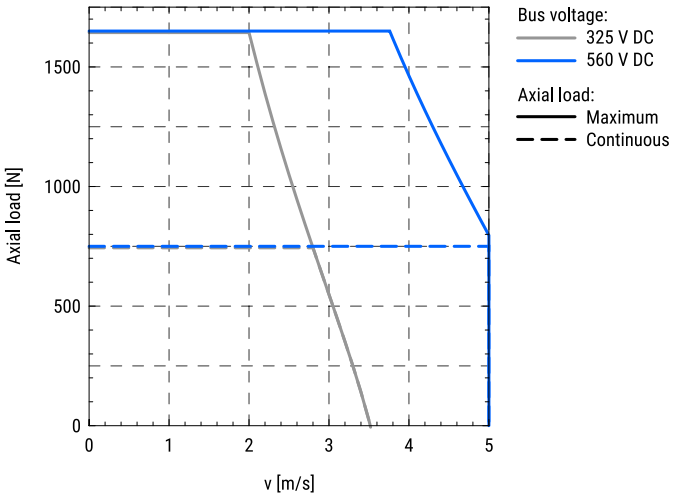

CTL 200 L High speed

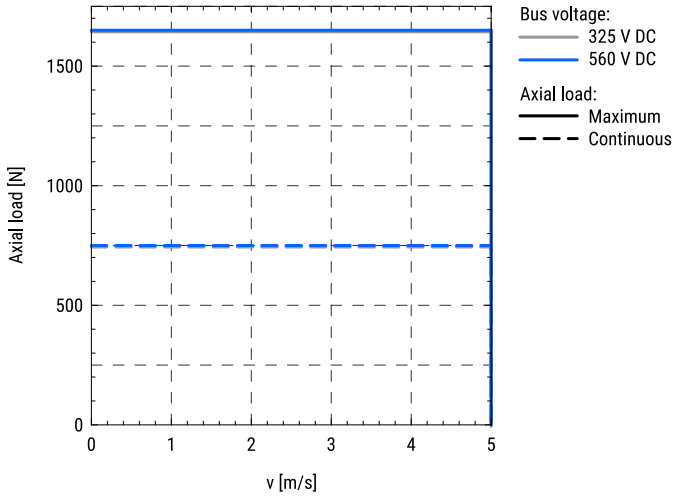

CTL 250 S Low speed

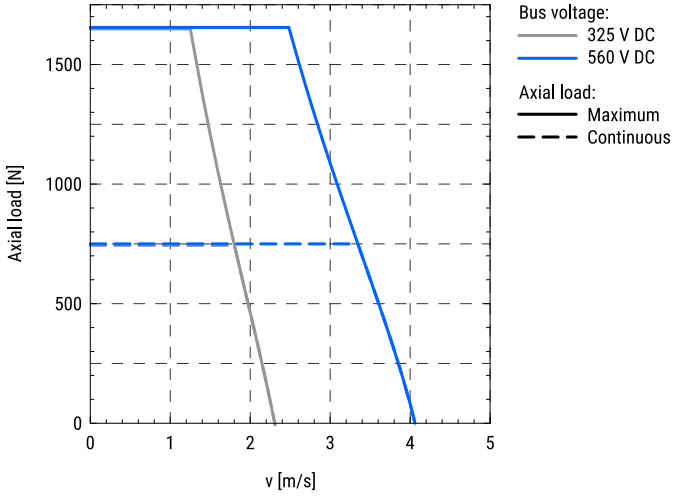

CTL 250 S High speed

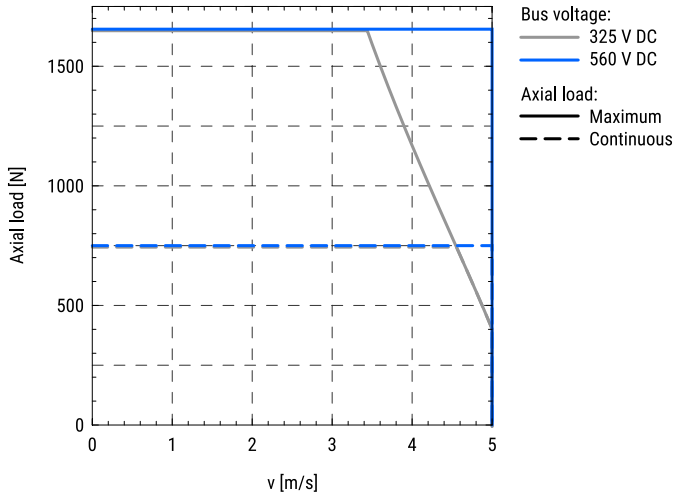

CTL 250 L Low speed

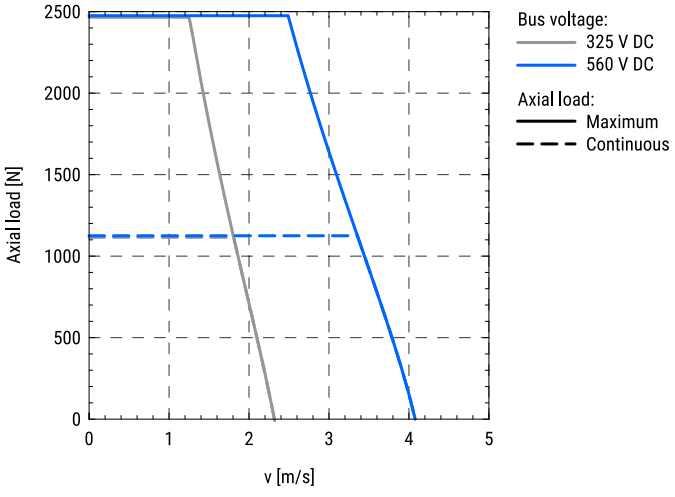

CTL 250 L High speed

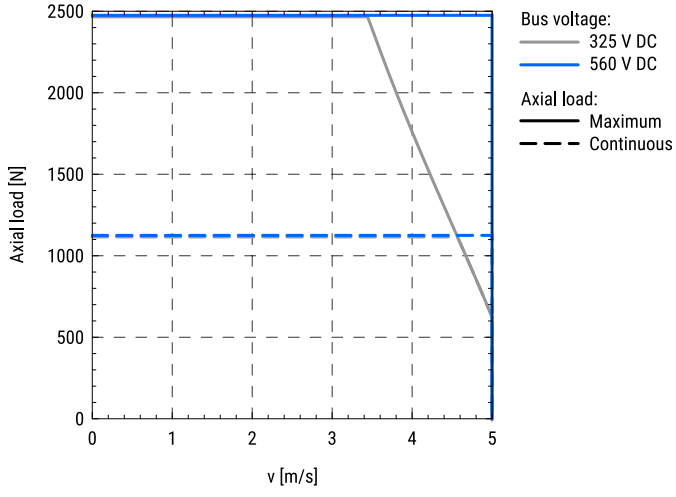

DIMENSIONS

All dimensions are in mm. Drawing scales may not be equal.

CTL

* Only present if the IIoT option is selected.

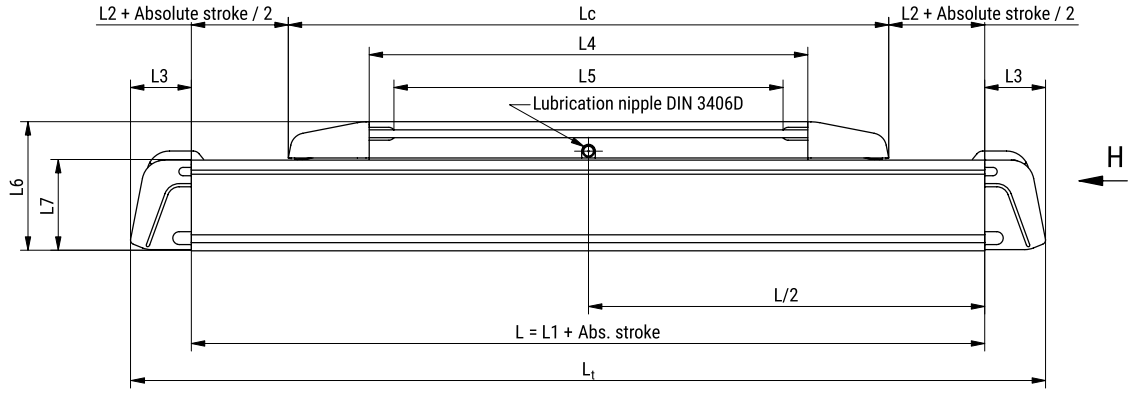

Carriage of the CTL 145 and CTL 200

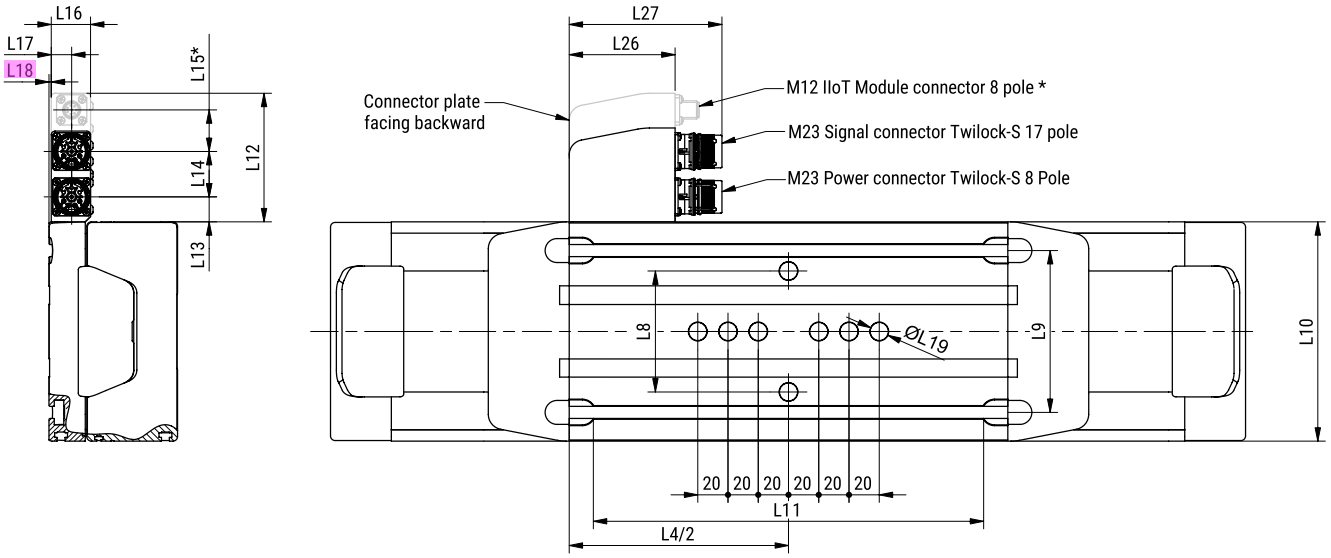

Carriage of the CTL 250

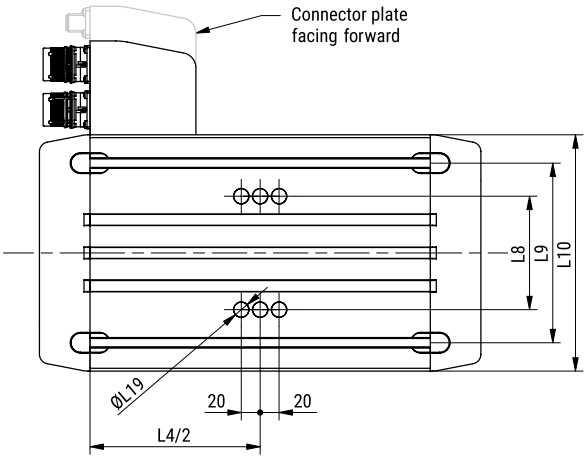

In order to improve the products in this catalogue the specifications are subject to change without notice.

CTL	Carriage version	Lc	L1	L2	L3	L4	L5	L6	L7	L8	L9	L10	L11
145	S	397	426	14,5	40,3	290	257,3	85	60	80	107	145	258
	L	487	516	14,5	40,3	380	347,3	85	60	80	107	145	348
200	S	432	461	14,5	43,7	325	288,3	107	78	80	150	200	286,5
	L	517	546	14,5	43,7	410	373,3	107	78	80	150	200	371,5
250	S	467	496	14,5	46,1	360	341,6	119	90	120	190	250	320,9
	L	567	596	14,5	46,1	460	423,2	119	90	120	190	250	420,9

CTL	Carriage version	L12[1]	L13	L14	L15[1]	L16	L17	L18	ØL19 (H7)	L20	L21	L22	L23	L24	L25	L26	L27
145	S	60 (85)	16,5	30	– (27,5)	26	13,5	1,50	12	77	52	_[2]	8	_[2]	_[2]	70	101
	L																
200	S	60 (85)	16,5	30	– (27,5)	26	13,5	5	16	99	68	56	18	150	_[2]	70	101
	L																
250	S	60 (85)	16,5	30	– (27,5)	26	13,5	5	16	111	80	63	18	130	210	70	101
	L																

[1] If the IIoT is selected refer to the vaule in the brackets
[2] The feature is not present on the unit

UNIMOTION

CALCULATE AND CONFIGURE YOUR OWN SOLUTION

The LINEAR UNITS CALCULATION TOOL is an online application that enables quick and easy selection of a suitable product, with the possibility of achieving the optimal ratio between the given capacity and the price, including 3D CAD models.

For more information please contact us or visit our website.

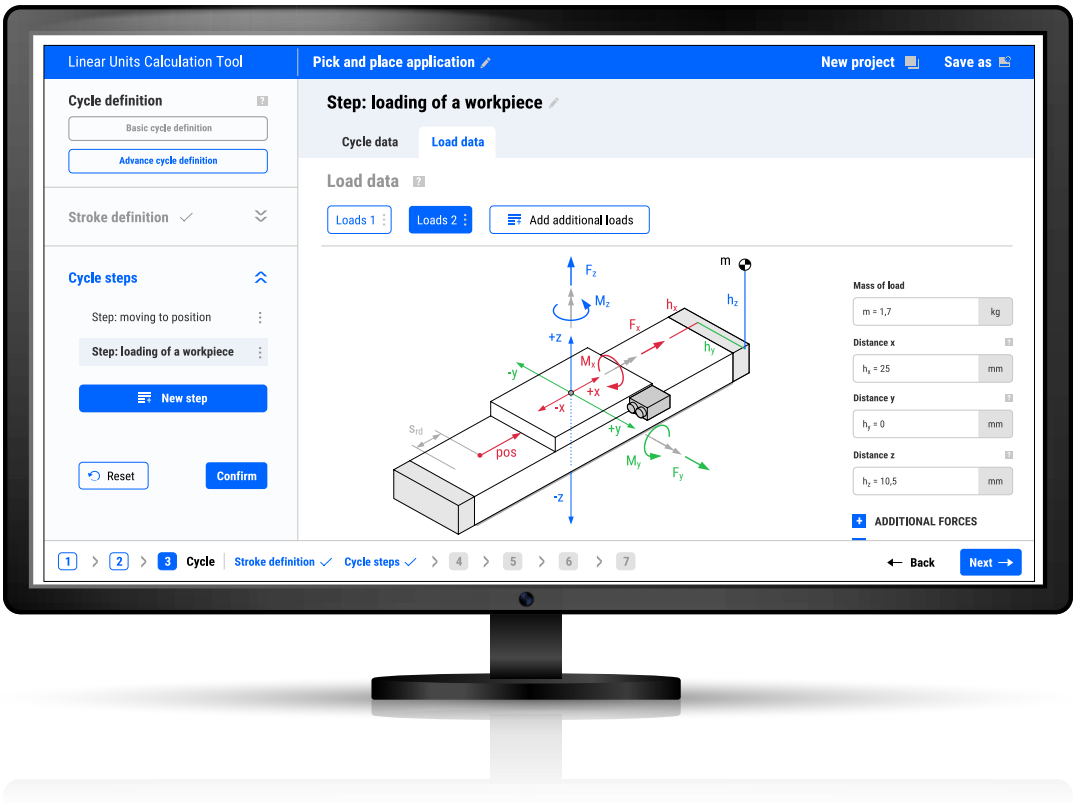

CTL slots

A

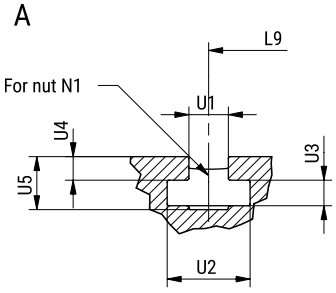

B

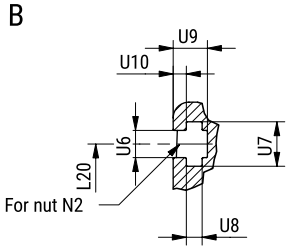

H

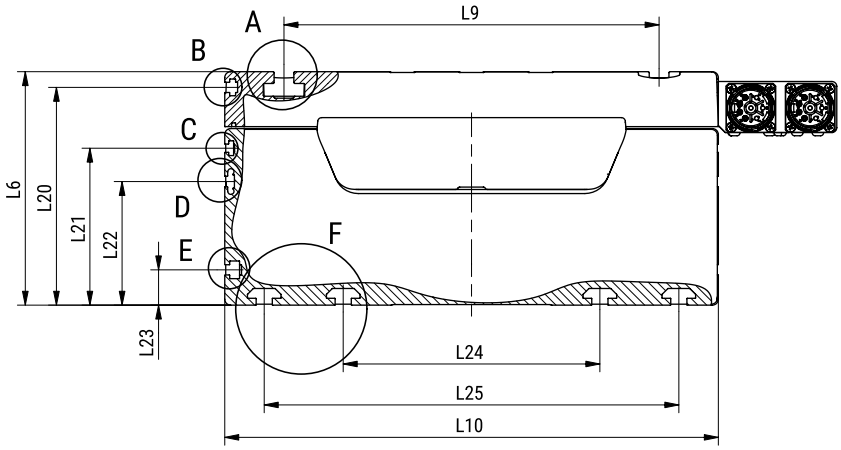

C

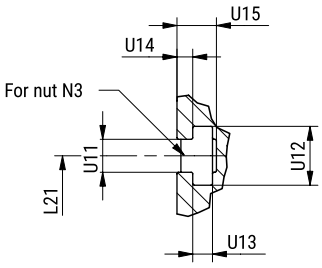

D; CTL200

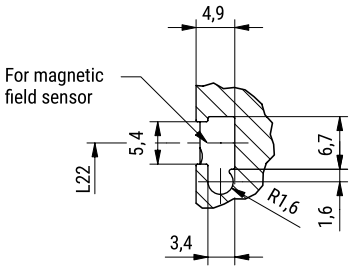

D; CTL 250

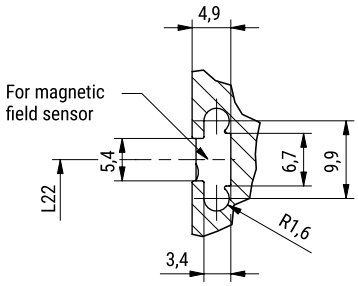

E

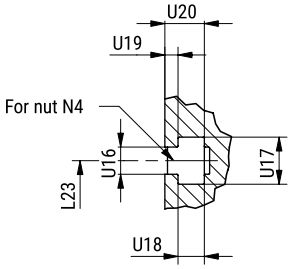

F

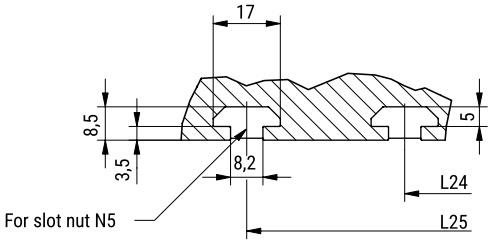

CTL	U1	U2	U3	U4	U5	U6	U7	U8	U9	U10	U11	U12	U13	U14	U15	U16	U17	U18	U19	U20
145	8	16,5	6,3	3,5	10,3	5,2	8,5	3	6	2,5	2,7	5,5	2	3,5	1	5,2	8,5	3	6	2,5
200	10	21	6,5	6	13,5	5,2	8,5	3	6,5	2,5	4,2	7,5	2,5	5	2	5,2	9	5	8,5	2,5
250	10	21	6,5	6	13,5	5,2	8,5	3	6,5	2,5	4,2	7,5	2,5	5	2	5,2	9	5	8,5	2,5

CTL	N1	N2	N3	N4	N5
145	T8	DIN562 M5	DIN562 M2,5	DIN562 M5	–
200	T10	DIN562 M5	DIN562 M4	DIN557 M5	T8
250	T10	DIN562 M5	DIN562 M4	DIN557 M5	T8

For more information about slot nuts please refer to the section “Accessories → Connection elements → Slot nuts”.

In order to improve the products in this catalogue the specifications are subject to change without notice.

CTL with a standard energy chain

Connector orientation: Backward

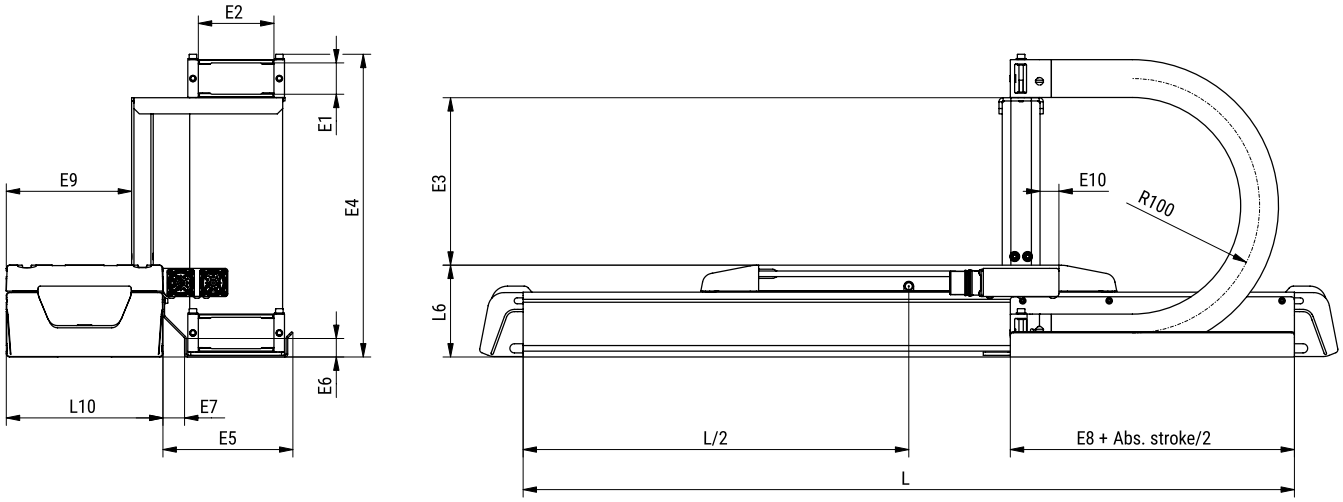

Connector orientation: Forward

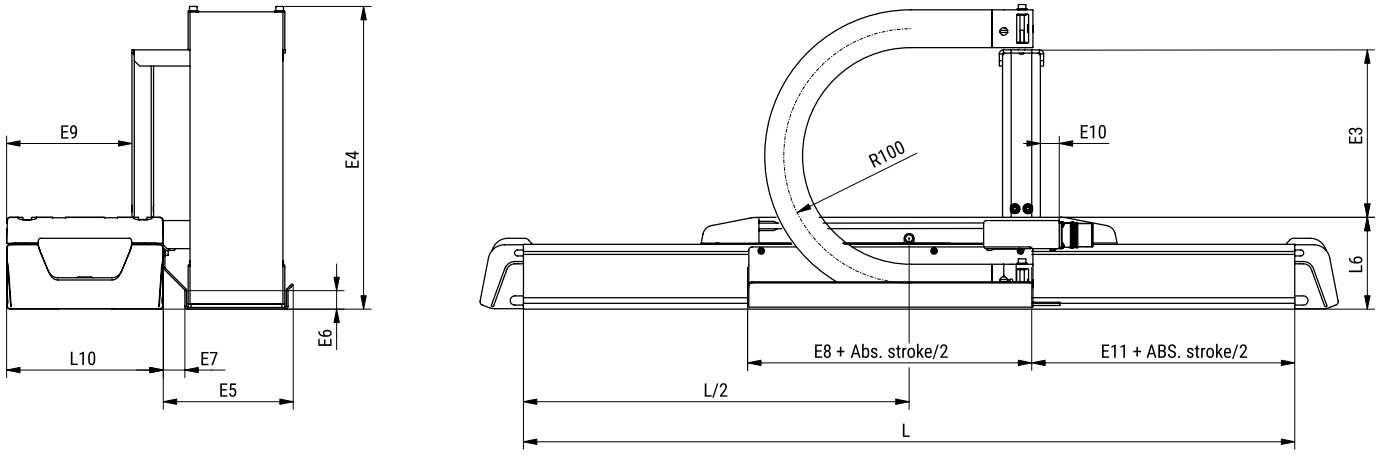

CTL	Enegy chain size	E1	E2	E3	E4	E5	E6	E7	E8	E9	E10	E11
145	28×70	28	70	119,5	251,5	124,3	17	20	113	116	17,5	93,5
	28×100	28	100	119,5	251,5	154,3	17	20	113	116	17,5	93,5
200	28×70	28	70	97,5	251,5	124,3	17	20	113	165	17,5	93,5
	28×100	28	100	97,5	251,5	154,3	17	20	113	165	17,5	93,5
250	28×70	28	70	85,5	251,5	124,3	17	20	113	210	17,5	93,5
	28×100	28	100	85,5	251,5	154,3	17	20	113	210	17,5	93,5

For more information about the standard energy chain please refer to the section “Accessories → Energy chain”

Absolute stroke and length of the CTL definition

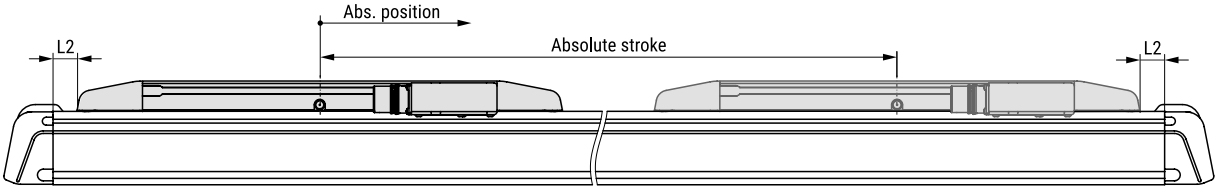

Absolute stroke definition
Absolute stroke = Effective stroke + 2 × Safety stroke

The CTL does not include any safety stroke.
The absolute stroke is the distance between the two positions of the carriage that are as far apart as it is physicaly possible.

Length definition
$L_t = L + 2 \times L3$

Lengths L and L_t are defined as it is presented on the dimensional drawings above.

Abs. stroke	Absolute stroke	[mm]
Abs. position	Absolute position	[mm]
L	Length	[mm]
L_t	Total length	[mm]

In order to improve the products in this catalogue the specifications are subject to change without notice.

ACCESSORIES

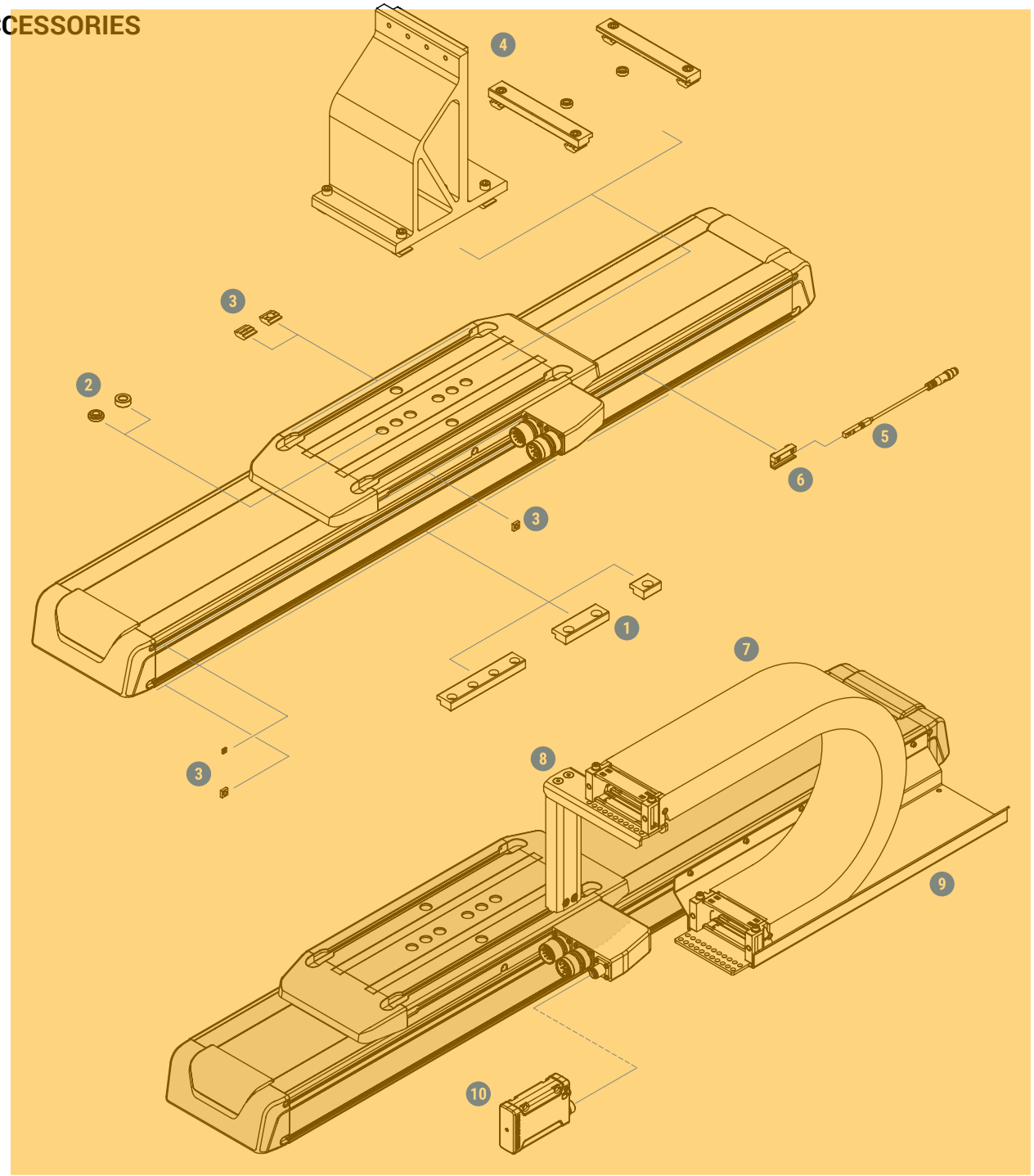

#	Accessories	Compatible with CTL size			Page	
		145	200	250		
1	Clamping fixture	•	•	•	24	Mounting attachment accessories
2	Centering ring	•	•	•	25	
3	Slot nut	•	•	•	25	
4	Connection plate	•	•	•	26	
5	Magnetic field sensor	•	•	•	27	Limit switches
6	Sensor holder	•	—	—	27	
7	Energy chain	•	•	•	28	Energy chain set
8	Energy chain holder	•	•	•	28	
9	Energy chain profile	•	•	•	28	
10	IIoT module (Available soon)	•	•	•	22	IIoT

Electrical data

CTL connectors 21
Linear motors 21
Measuring systems 22
IIoT module 22
Hall Sensor 22

CTL CONNECTORS

Pin allocation

Motor connector

Connector type: M23 8-pole

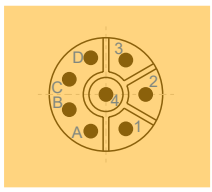

Pin	Function
1	U
2	PE
3	W
4	V
A	/
B	/
C	/
D	/

Encoder connector

Connector type: M23 17-pole

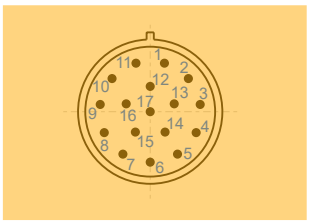

Pin	Pin allocation	
	1	2
1	B+	/
2	B–	/
3	A+	/
4	A–	/
5	ZERO+	DAT+
6	ZERO–	DAT–
7	0V (GND)	0V (GND)
8	TH+	TH+
9	TH–	TH–
10	+5V	+5V
11	/	/
12	/	/
13	/	/
14	/	/
15	HALL U	/
16	HALL V	CLK+
17	HALL W	CLK–

For information on which pin allocation is relevant for the selected measuring system please refer to the section “Electrical data → Measuring systems”

IIoT connector

Connector type: M12 8-pole
(Available soon)

LINEAR MOTORS

For information on what kind of linear motor is installed in a particular CTL linear unit please refer to the section “CTL → Technical data → Drive data”
For detailed information about the linear motors, please refer to the Unimotion documentation related to the linear motors.

MEASURING SYSTEMS

The measuring system in the CTL linear unit is available in four different versions.

To find out more about which options are available and what are their specifications please refer to the table below.

Technical data

Manufacturer	Scale	Readhead	Type	Communication	Resolution [mm]	Max speed [m/s]	Order code[2]	Pin allocation
RLS (an associate of Renishaw)	MS10A	LM10IC005BC10F00	Magnetic incremental	Digital RS422/TTL 5V	0,005	4,67	AAB	1
		LM10IC010BC10F00		Digital RS422/TTL 5V	0,01	8	AAA	
		LM10AV000AC10F00		Analog 1 Vpp	[1]	8	ABD	
	AS10A	LA11DAA11BKA10DF00	Magnetic absolute	Digital BiSS-c	0,000977	7	BCC	2

[1] Resolution is drive dependant
[2] Order code fields: Measuring system, Communication, Resolution

The designated pin allocation for each measuring system option is shown in the section: “Electrical data → Pin allocation”

Detailed information

Please refer to the manufacturer’s documentation related to the measuring systems.

IIoT MODULE

UNIMOTION IIoT (industrial internet of things) sensor module is a state-of-the-art technology for industrial predictive maintenance and advanced analytics.

It is a solution that gathers data from the linear motor, hall, and additional sensors and wirelessly stores it into the online cloud, where it can be accessed and processed. Gathered data can provide crucial information for predictive maintenance, machine operations, etc.

The main benefits of using an IIoT module are reduced risk related to maintenance, unexpected downtime prevention, lower maintenance costs, run cycle analysis, process optimization, etc.

Overall the use of an IIoT module together with our CTL linear unit can significantly extend its lifetime.

Available soon



HALL SENSOR

Universal Hall Sensor option with an integrated Analog and Digital function.

For more information about the hall sensor please reffer to the Unimotion Linear motors catalogue.

In order to improve the products in this catalogue the specifications are subject to change without notice.

Accessories

Clamping fixtures 24
Connection elements 25
Connection plates 26
Magnetic field sensor 27
Energy chain 28

CLAMPING FIXTURES

CTL linear units can be mounted to the desired surface with clamps, which are placed in the slots on the side of the profile.

Material: Anodized aluminium

Drawings scales may not be equal.

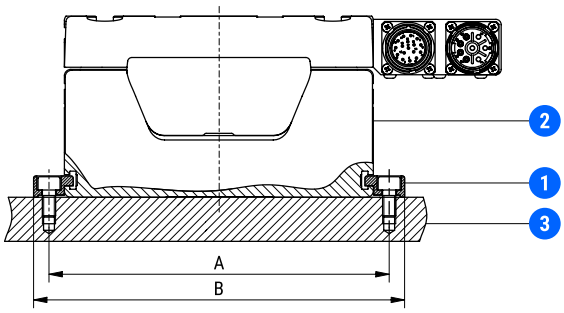

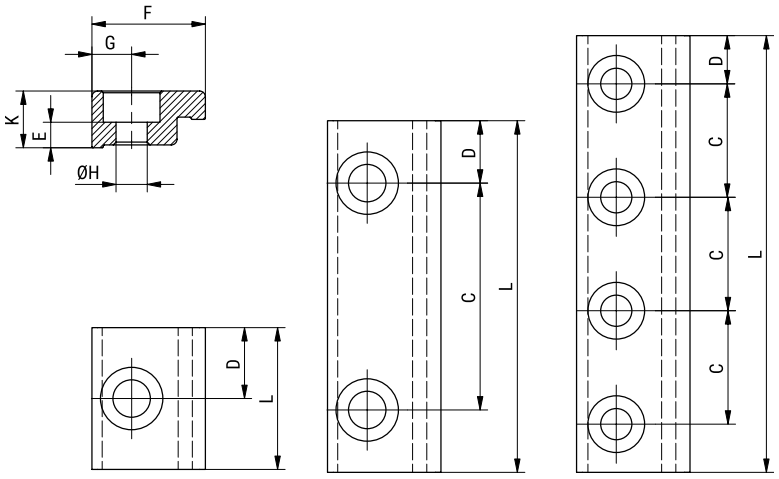

1 – Clamping fixture
2 – Profile of the CTL
3 – Base

Dimensions and ordering codes

CTL	Clamping fixture			Mounting distance [mm]		Dimensions [mm]								m [g]	Code
	For screw	Type	L [mm]	A (±0,1)	B	C	D	E	F	G	ØH	K	Countersink for		
145	M6	T1	25	161	175	–	12,5	3,4	20	7	6,6	10	DIN 912	10	48642
	M6	T2	62	161	175	40	11	3,4	20	7	6,6	10	DIN 912	30	48643
	M5	T3	77	161	175	20	8,5	4,5	20	7	5,5	10	DIN 912	30	48640
	M5	T3	107	161	175	30	8,5	4,5	20	7	5,5	10	DIN 912	45	46995
	M6	T3	142	161	175	40	11	3,4	20	7	6,6	10	DIN 912	56	55260
200 (250)	M6	T1	25	213 (263)	228 (278)	–	12,5	11,5	20	7,5	6,5	20	DIN 912	17	108498
	M6	T2	60	213 (263)	228 (278)	40	10	11,5	20	7,5	6,5	20	DIN 912	54	37129
	M5	T3	77	213 (263)	228 (278)	20	8,5	14,5	20	7,5	5,5	20	DIN 912	55	49583
	M6	T3	100	213 (263)	228 (278)	27	9,5	11,5	20	7,5	6,5	20	DIN 912	69	46951

Bracketed values refer to the CTL 250

Recommended number of clamping fixtures is:
- 6 T1 fixtures per meter on each side of the profile,
- 3 T2 fixtures per meter on each side of the profile,
- 3 T3 fixtures per meter on each side of the profile.

In order to improve the products in this catalogue the specifications are subject to change without notice.

CONNECTION ELEMENTS

Centering rings

Material: stainless steel

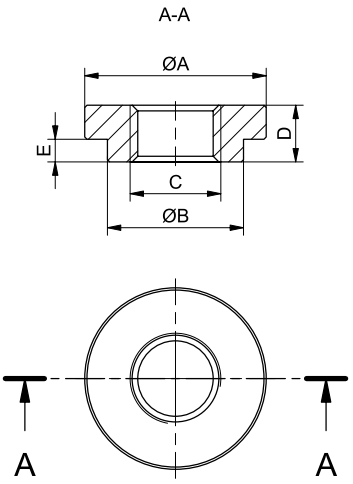

Dimensions and ordering codes

CR	A (k6)	B (k6)	C	D (+0/−0,2)	E (+0/−0,1)
9/12	12	9	M6	4	2
9/16	16	9	M6	5	2
12	12	12	M8	4	–
12/16	16	12	M8	5	2
16	16	16	M10	6	–

Centering ring compatibility

CR	CTL	m [g]	Code
9/12	145	2	48885
9/16	200, 250	5	103813
12	145	2	49049
12/16	145, 200, 250	5	102221
16	200, 250	7	53023

Centering rings can only be used for positioning, no force should be transmitted using a CR.

Slot nuts

CTL linear unit can be mounted using the slot nuts which are placed in the slots on the profile or on the carriage. Slot nuts can also be used for mounting the accessories. On the following figure all the possible slot locations of the CTL linear unit are presented.

Material: galvanized steel

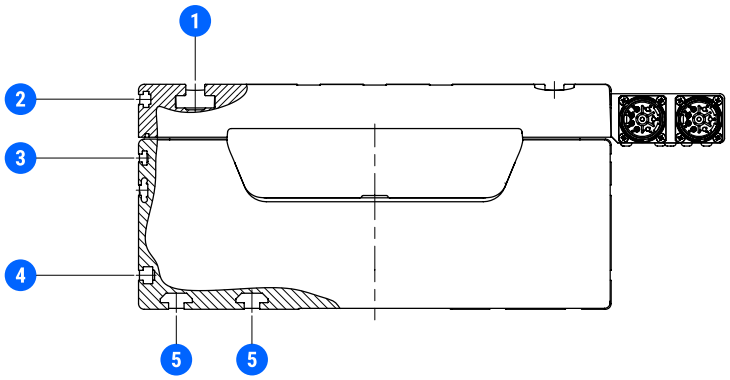

Drawings scales may not be equal.

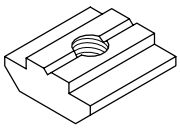

T8 / T10



DIN 557



DIN 562

Nut type	CTL compatibility			m [g]	Code
	145	200	250		
T-8L-M4	1	5	5	9	5704
T-8L-M5	1	5	5	9	5703
T-8L-M6	1	5	5	8	5702
T-8L-M8	1	5	5	3	5701
T-10-M5	–	1	1	21	5553
T-10-M6	–	1	1	20	5552
T-10-M8	–	1	1	19	5551
DIN562 M2,5	3	–	–	0,5	41609
DIN562 M4	–	3	3	1	40682
DIN562 M5	4, 2	2	2	1	40768
DIN557 M5	–	4	4	2	40769

CONNECTION PLATES

CTL linear units can be mounted together using the connection plate. One linear unit can be mounted to the carriage of another and form a simple two-axis system.

Mounting of two CTL units, as well as other linear units from our product lines, listed in the table below, is possible using the connection plates. On the left and right figure bellow the example of XZ and XY combination of the linear units are presented, respectively.

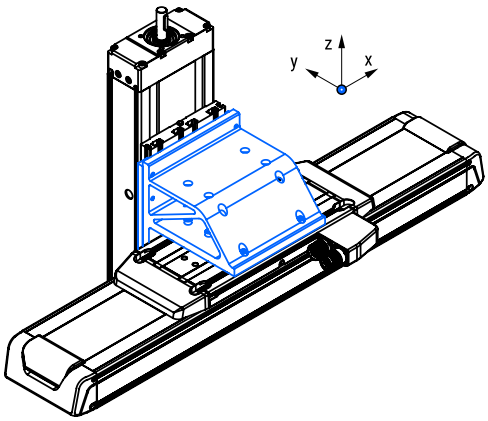

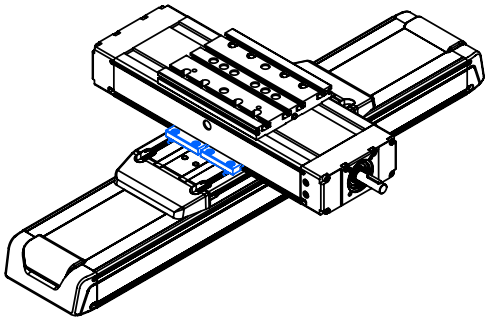

All the materials (i.e.: screws, clamps, centering rings...) necessary for mounting the connection plate and the linear units it connects are included.

Connection plate for XY combinations

	Y-axis						
X-axis	CTL 145	CTJ 145	CTV 145	CTL 200	CTJ 200	CTV 200	CTL 250
CTL 145	•	•	•	•	•	•	—
CTL 200	—	—	—	•	•	•	•
CTL 250	—	—	—	—	—	—	•

Connection plate for XZ combinations

	Z-axis						
X-axis	MTJZ 65	MTJZ 80	MTJZ 110	CTV 90	CTV 110	CTV 145	CTV 200
CTL 145	•	•	—	•	•	—	—
CTL 200	—	•	•	—	•	•	—
CTL 250	—	—	•	—	—	—	•

In order to improve the products in this catalogue the specifications are subject to change without notice.

MAGNETIC FIELD SENSOR

Magnetic field sensors can be mounted directly to the unit, using the slot for the magnetic field sensor placed on each side of the CTL profile.

For the CTL size 145, an additional sensor holder (HOM) is needed.

CTL 145

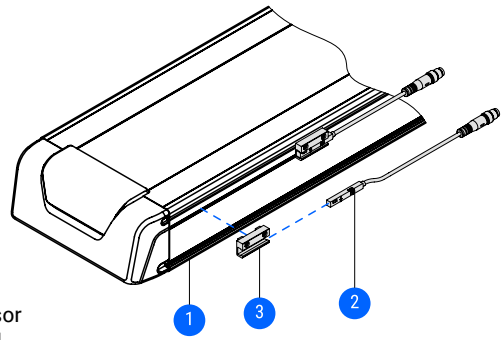

1 – Profile body of the CTL linear unit
2 – Magnetic field sensor
3 – Sensor holder HOM

CTL 200, 250

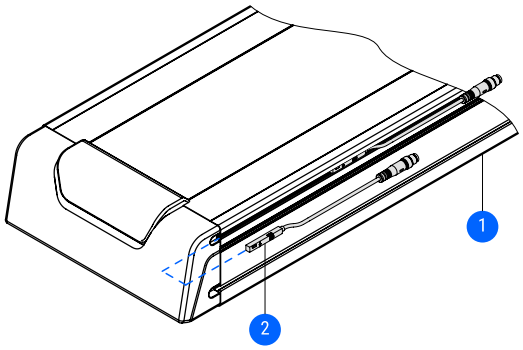

Technical data

Characteristics	SMT 65 TP K NC	SMT 65 TP K NO
Function principle	Magnetic	
Sensor type	GMR sensor	
Switching function	NC-normally close	NO-normally open
Wiring method	3-wire type	
Sensor type	PNP current sourcing	
Operating voltage	10 ~ 28 V DC	
Switching current	200 mA max.	
Contact rating	5,5 W max.	
Voltage drop	1,5 V @ 200 mA max.	
Current consumption	10 mA @ 24 V DC max.	
Operating frequency	1000 Hz max.	
Ambient temperature	–10 ~ +70 °C	
Shock / Vibration	50 G / 9 G	
Protection class	IP67	
LED indicator	Yellow	
Electrical connection	M8, 3-pin	
Cable (diameter, material, length)	∅2,8 mm, PU, 300 mm	
Extension cable	Energy chain compliant	

Ordering codes and compatibility

Type	Code	CTL
SMT-65TP-K NC	74073	200, 250
SMT-65TP-K NO	74074	
SMT-65TP-K NC + HOM	77075	145
SMT-65TP-K NO + HOM	77076	

Extension cable

Type	Connector	Length [m]	Code
Extension cable	Straight	2	8146
		5	8147
	Angled	2	9017
		5	9019

Dimensions

Magnetic field sensor SMT 65 TP K NO/NC

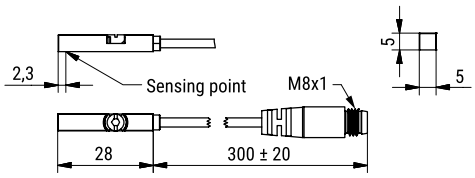

Extension cable

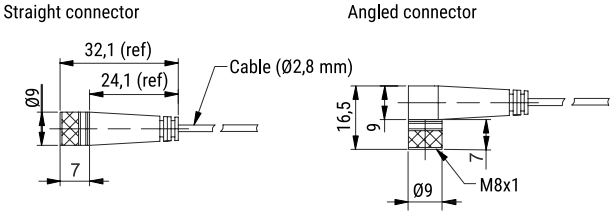

ENERGY CHAIN

1 – Energy chain
2 – Energy chain holder
3 – Energy chain support profile

Energy chain set

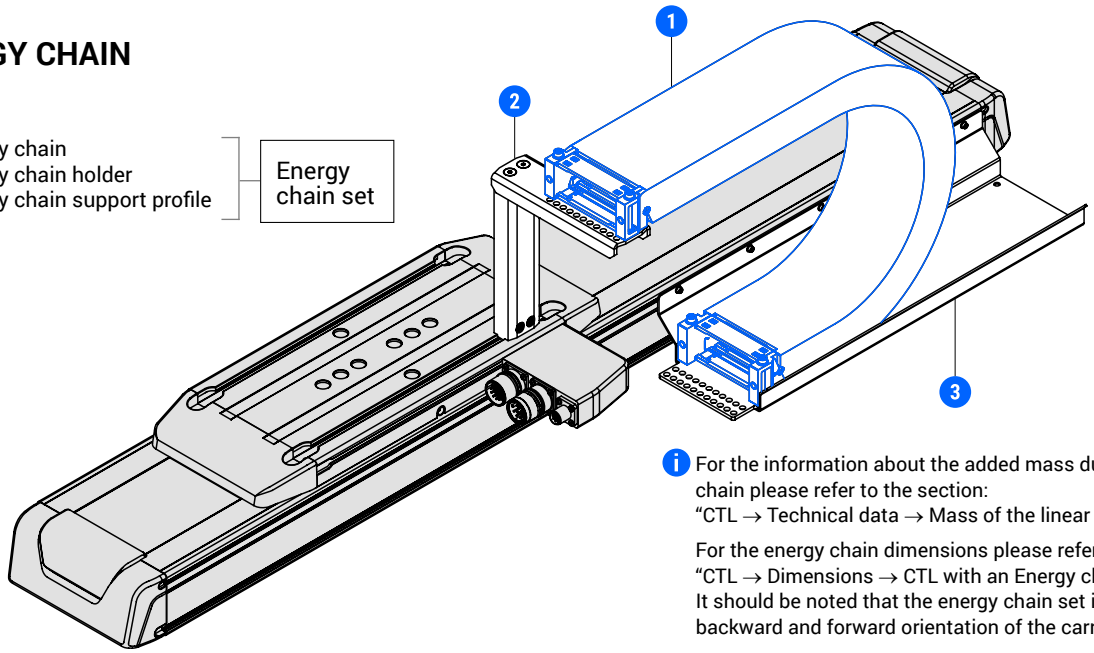

For the information about the added mass due to the energy chain please refer to the section:
"CTL → Technical data → Mass of the linear unit"

For the energy chain dimensions please refer to the section:
"CTL → Dimensions → CTL with an Energy chain"
It should be noted that the energy chain set is the same for both backward and forward orientation of the carriage connector.

How to order

EC - CTL - 145 - 3500 - A

Energy chain

Series:
CTL

Linear unit size
– 145
– 200
– 250

Absolute stroke [mm]:
(Absolute stroke = Effective stroke + 2 × Safety stroke)

Maximum absolute stroke up to 4800 mm is available.

Energy chain size:
– A: 28 × 70
– B: 28 × 100

The energy chain set includes the energy chain, the energy chain holder and the energy chain profile. All the screws and nuts required for assembly and mounting are included.

Technical data

Characteristics	A – 28 × 70	B – 28 × 100
Energy chain inner height [mm]	28	
Energy chain inner width [mm]	70	100
Bending radius [mm]	100	
Compatible with the CTL size	145, 200, 250	
Manufacturer	igus GmbH	
Manufacturer's energy chain series	E4-28	

In the following diagram, the fill weight of the energy chain as a function of the absolute stroke of the linear unit CTL is presented. Both running cases of the energy chain, i.e. with the straight run and with the permissible sag, are taken into consideration.

Energy chain overloading and permissible speed/acceleration

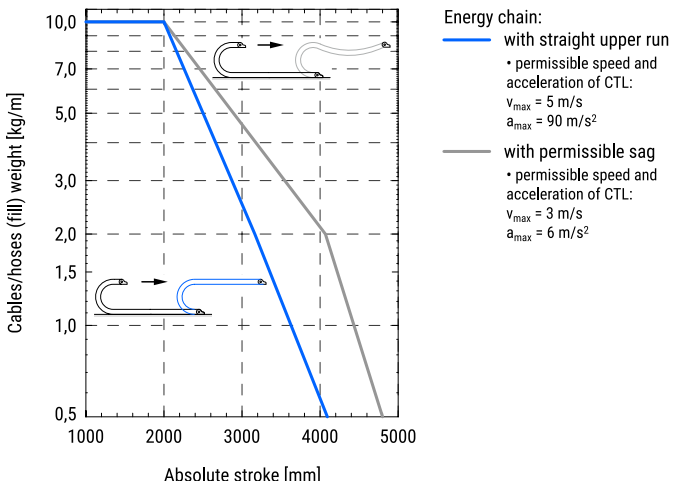

For detailed information about the energy chain, please refer to the manufacturer documentation.

In order to improve the products in this catalogue the specifications are subject to change without notice.

Service life

Linear guiding..... 30

LINEAR GUIDING

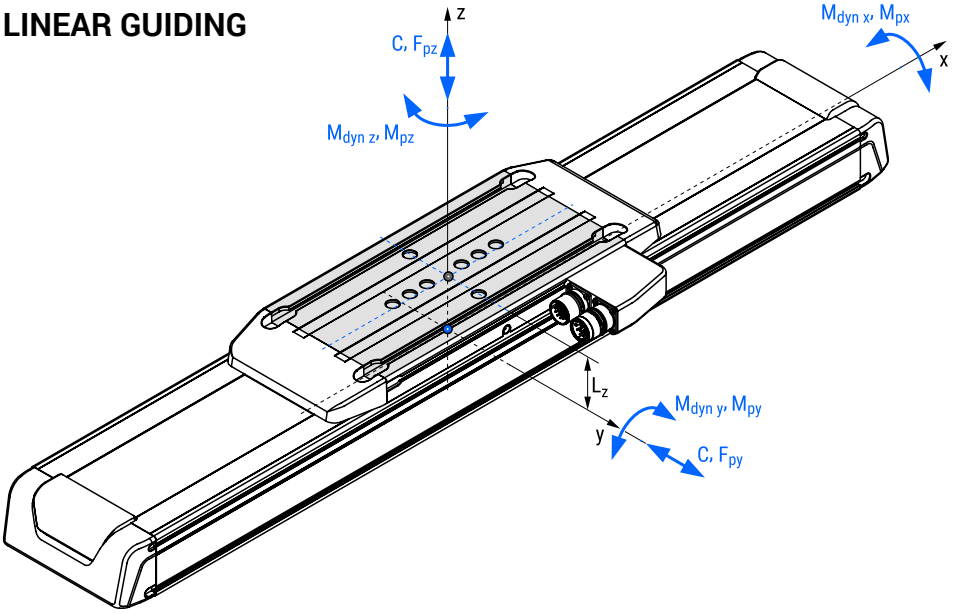

Dynamic load capacity, dynamic moments, and maximum permissible loads of the linear guiding system integrated into the linear unit all refer to the centre of the linear guides.

The applied loading condition needs to be calculated with respect to the centre of the linear guides.

The presented attachment distance L_z must be taken into consideration.

CTL	Attachment distance L_z [mm]
145	61,7
200	70,5
250	78,5

C	Dynamic load capacity	[N]
$M_{dyn\ x}$	Dynamic moment about the x axis	[Nm]
$M_{dyn\ y}$	Dynamic moment about the y axis	[Nm]
$M_{dyn\ z}$	Dynamic moment about the z axis	[Nm]
$F_{py\ max}$	Max. permissible force in the y direction	[N]
$F_{pz\ max}$	Max. permissible force in the z direction	[N]
$M_{px\ max}$	Max. permissible moment about the x axis	[Nm]
$M_{py\ max}$	Max. permissible moment about the y axis	[Nm]
$M_{pz\ max}$	Max. permissible moment about the z axis	[Nm]

Permissible load

Permissible load factor $f_{p\,g}$

$$f_{p\,g} = \frac{|F_y|}{F_{py}} + \frac{|F_z|}{F_{pz}} + \frac{|M_x|}{M_{px}} + \frac{|M_y|}{M_{py}} + \frac{|M_z|}{M_{pz}} \leq 1$$

A permissible load factor of the linear guiding system $f_{p\,g}$ must never exceed the value of 1.

$f_{p\,g}$	Permissible load factor	
F_y	Applied force in the y direction	[N]
F_z	Applied force in the z direction	[N]
M_x	Applied moment about the x axis	[Nm]
M_y	Applied moment about the y axis	[Nm]
M_z	Applied moment about the z axis	[Nm]

Service life

Service life calculation

$$L_{km\,g} = \left(\frac{1}{f_{vm\,g}}\right)^3 \cdot 10^2$$

$L_{km\,g}$	Service life of the linear guiding system	[km]
$f_{vm\,g}$	Mean load comparison factor	

In order to improve the products in this catalogue the specifications are subject to change without notice.

Mean load comparison factor $f_{vm\,g}$ as a function of service life $L_{km\,g}$

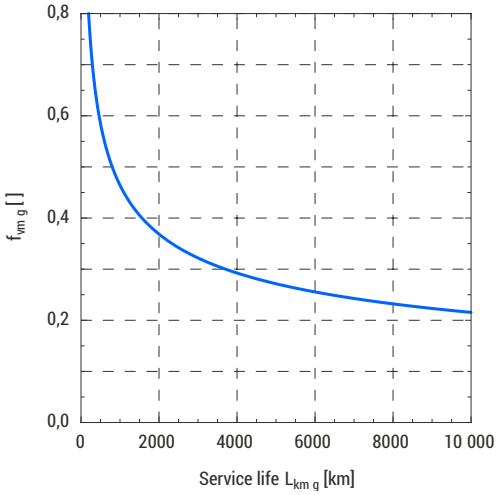

Diagram represents the theoretically determined service life of the linear guiding system when the mean load comparison factor $f_{vm\,g}$ is considered.

It should be noted that the application conditions may have a significant effect on the service life.

Mean load comparison factor $f_{vm\,g}$

$$f_{vm\,g} = \sqrt[3]{\frac{f_{v1\,g}^{\,3} \cdot s_1 + f_{v2\,g}^{\,3} \cdot s_2 + \cdots + f_{vn\,g}^{\,3} \cdot s_n}{s_1 + s_2 + \cdots + s_n}}$$

$f_{vi\,g}$	i-th load comparison factor of a given loading regime $f_{v\,g}$ (s), i ∈ {1, 2, ..., n}
s_i	i-th travel path of a given loading regime $f_{v\,g}$ (s), i ∈ {1, 2, ..., n}

Loading regime $f_{v\,g}$ (s)

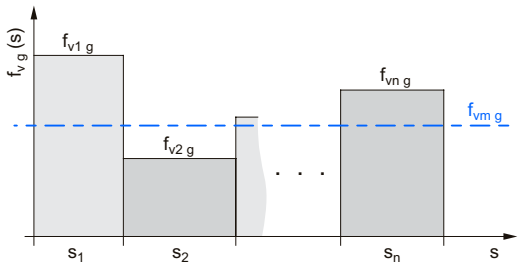

Load comparison factor $f_{v\,g}$

$$f_{v\,g} = \frac{|F_y|}{C} + \frac{|F_z|}{C} + \frac{|M_x|}{M_{dyn\,x}} + \frac{|M_y|}{M_{dyn\,y}} + \frac{|M_z|}{M_{dyn\,z}} + f_{v\,0}$$

$f_{v\,g}$	Load comparison factor
$f_{v\,0}$	Guiding system pretension factor

Mean dynamic safety factor $f_{sm\,g}$

$$f_{sm\,g} = \frac{1}{f_{vm\,g}}$$

$f_{sm\,g}$	Mean dynamic safety factor

The safety factor depends on the application and its requested safety. A minimum dynamic safety factor of 5,0 or more is recommended.

Guiding system pretension factor

CTL	Carriage version	$f_{v\,0}$
145	S	0,088
	L	0,084
200	S	0,095
	L	0,095
250	S	0,094
	L	0,095

UNIMOTION



We cover all major markets. If you wish to contact us, send us an enquiry and we will be happy to assist you.

GERMANY

Unimotion GmbH
Walramstraße 23
D-65510 Idstein

T +49 (0) 7404 4711 155
F +49 (0) 7404 930 85 60

www.unimotion.de
vertrieb@unimotion.de

NORTH AMERICA

Unimotion North America, Inc.
3952 Ben Hur Ave, Unit 5
Willoughby, OH 44094

T: +1 440-525-9106

www.unimotionusa.com
info@unimotionusa.com

Unimotion: October 2022