NEUGART

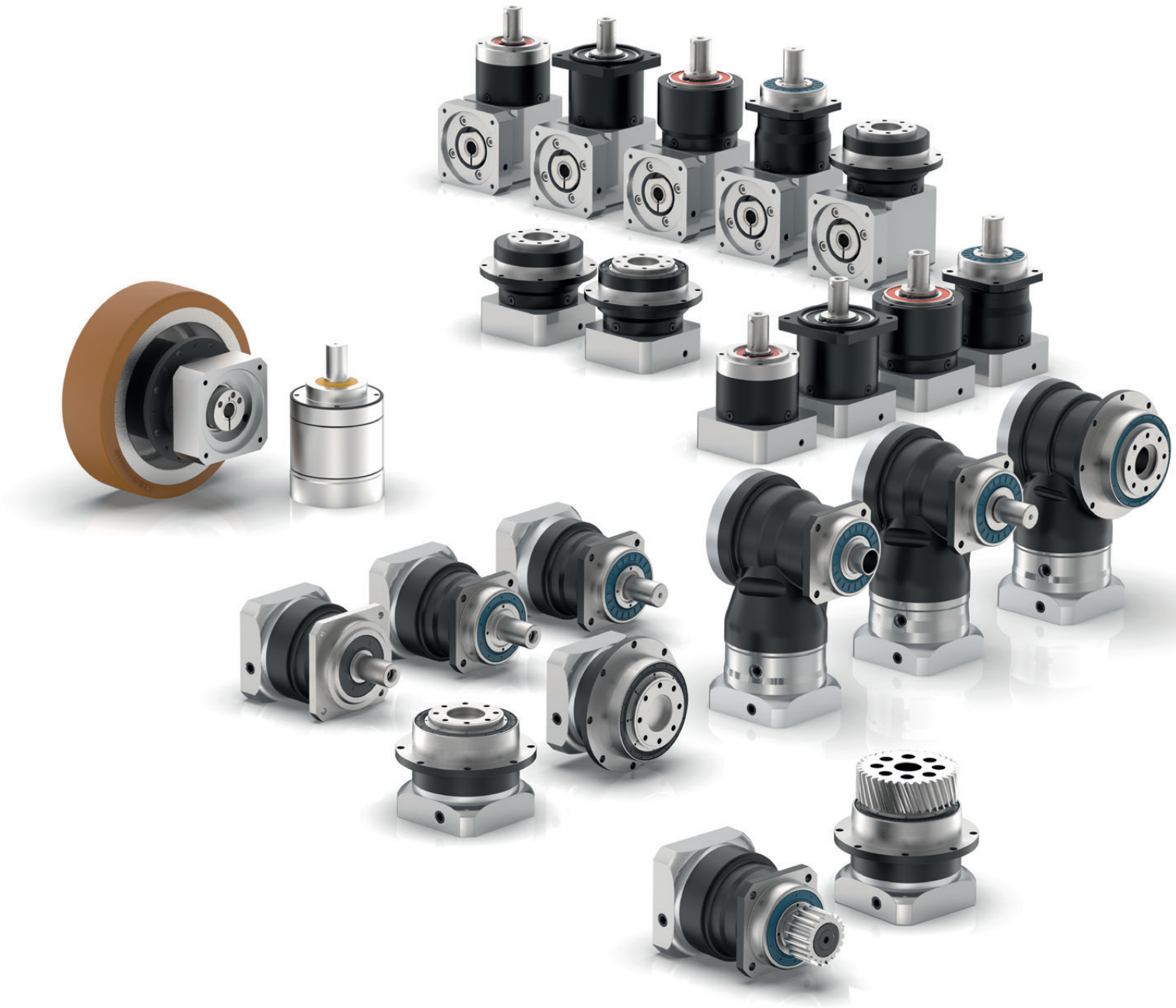

Complete gearbox catalog

Impress with power and precision.
Inspire with partnership.

“We are fascinated by the way in which a modest number of parts can be used to build a seemingly infinite number of gearbox variants, all the while making it appear like it’s quite simple.



Bernd Neugart
Managing Partner

Matthias Herr
Managing Partner

We achieve this because we understand the application, exploit the intelligence of our modular gearbox system and develop custom solutions within just a short time.

Our gearboxes deliver the power you need:
Reliably. Lifelong. And that’s a promise.”

Editorial

Power, precision and partnership – these values characterize our business philosophy and our work, and have for over 90 years.

Our offered product range includes numerous innovative, technologically mature, and highly reliable gearbox solutions. We now offer 19 different gearbox series for the economy and precision sectors, as well as two additional planetary gearbox series for specific application areas.

As a technology partner, we also provide customized solutions; specialized, custom designed gearboxes.

Please contact us with any questions about our products or services – we appreciate every opportunity to assist and meet your automation, precise motion and power transmission requirements.



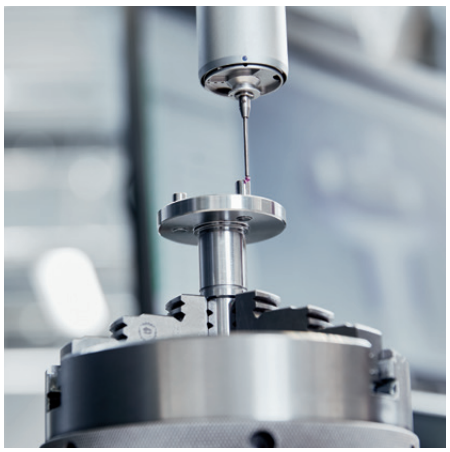



Table of contents

Editorial		1
Custom made gearboxes		4
Quality		5
Tools and trainings		6
For decision-makers		8
Industry solutions		10
Quick overview		12
Our gearbox features		15
Preformance classes		16
Economy Line		
	PLE	18
	PLQE	24
	PLPE	30
	PLHE	36
	PLFE	42
	PFHE	48
	WPLE	54
	WPLQE	60
	WPLPE	66
	WPLHE	72
	WPLFE	78
Precision Line		
	PSBN	84
	PSN	90
	PLN	96
	PSFN	102
	PLFN	108
	WPLN	114
	WPSFN	120
	WGN	126
Planetary gearbox with mounted pinion		132
	PK1	134
	PM1	136
	PM2	138
Application-specific gearboxes		
	NGV	140
	HLAE	148
Option: Output flange design		156
Option: Input design		160
Product Code		162
Technical background		166
Contact		168
Explanation of technical features		173



Innovative and individual: Our custom made gearboxes.

Compact form and high performance, special construction requirements, food grade certification or individual design: We fulfill even your most complex requirements – in all sectors of machine building.

The qualified specialists of our engineering department design gearbox solutions and systems. According to your performance, price and quality needs.
Your benefit from innovation: We utilize our experience and at the same time take advantage of new developments, integrating them into our customer solutions.

Close collaboration with our customers is important to us even in the earliest development phases of individual drive solutions. We believe in providing on-site advice and optimal service in relation to every aspect of your custom made gearbox.





Power at a high level: Our quality.

Your satisfaction is our measuring stick – that's why the quality of our products and services is always our top priority.
With our quality and environmental policies we secure and expand our economic success throughout international markets.

Our high standard in product quality, support and service is appreciated internationally: With over 70 representatives and branches, we are represented in all major industrial nations.

We manufacture our products exclusively in Germany.
In the USA and China, our assembly factories serve regional markets, guaranteeing a high level of flexibility for adaptations as well as the shortest delivery times.







Powerful and intuitive interface: Neugart Calculation Program – NCP

The Neugart Calculation Program (NCP 4.2) lets you assemble the optimal motor and gearbox combination with just a few clicks. Your application therefore becomes cost and energy efficient. In the background, a complex software routine calculates all parameters for your whole drive train. Despite this complex process, the tool is easy to use: The NCP user interface presents a clear intuitive structure.

NCP gives you access to virtually all of the conventional motors on the market and a large number of applications like pinions, spindles, belts, conveyors, rotary tables, slider cranks, and winders. Dynamics and load data are depicted as graphs in each stage. You can then see in real time whether the components you have selected are suitable or not.

Your benefits at a glance:

- Transparent dimensioning – input and output values at a glance
- Free of charge for you (as a Neugart customer or prospective)
- Offline mode – design without internet access
- Extensive database containing over 19,000 motors
- Reliability based on plausibility checks of all entered values
- Extensive technical documentation for all calculating steps
- Multilingual support – seven different languages to choose from
- Online access to dimension sheets and CAD files for the selected products

Neugart offers NCP training courses at regular intervals.
Please contact us at **training@neugart.com**

New online services, new options:
Tec Data Finder – TDF

With just a few clicks, the Tec Data Finder (TDF) generates all of the information relevant to your gearbox. This includes the specific technical and geometrical data in the form of a dimension sheet as well as the CAD models in all of the usual formats.

At the same time, the gearbox geometry can be adapted and tuned directly to your specific motor. This is based on a comprehensive motor database or on manual entries of individual connection measurements. In addition, the gearbox data can also be downloaded directly from the dimension sheet and CAD database without the advance selection of a specific motor.

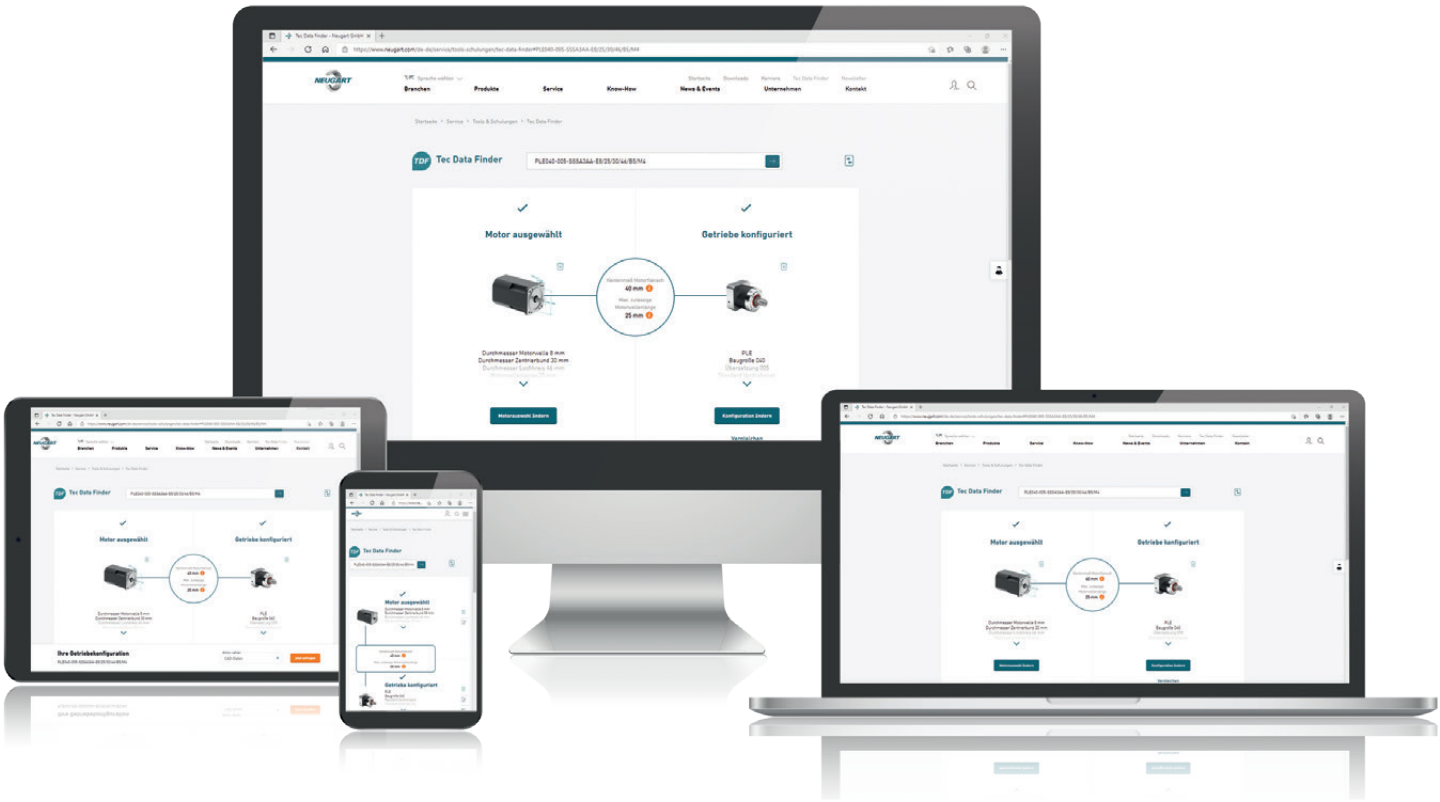

Your benefits at a glance:

- Free online tool
- Comprehensive motor database (over 20,000 motors)
- Plausibility check on motor and gearbox flange geometries
- User account – for even faster access
- Request cart – for fast quote requests and CAD data
- Configuration start – begin with motor or gearbox
- Comparison list (up to 5 gearboxes)
- Information can be output in seven different languages

The NCP and TDF tools can be found on our website:
www.neugart.com



Perfection in every detail: Our products and our service.

We support you with a wide range of services – from NCP, our free calculation tool, to the Neugart dimension sheet and product finders to our integrated, certified claims management.

We are represented in all major markets with local companies. Our internal information network and the business software we use ensure smooth internal communication and optimally coordinated business processes.

Powerful, efficient and innovative: We create forward-looking solutions in gearbox technology – high quality at reasonable prices.



Decidedly different:
Neugart – for good reason.

Neugart distinguishes itself with advanced, innovative technology, with high-precision production technology and has been doing so for decades. Worldwide, renowned customers put their trust in our vast experience.

Our precise planetary gearboxes and our experience in the construction of custom made gearboxes are highly sought after in national and international markets.

Put your trust in the highest level of performance – Made in Germany: In our well-balanced portfolio you will find the right product for your needs.

We can provide you with good reasons to make a decision for Neugart now.



We are your specialist in planetary gearboxes.

As a reliable, trusted and innovative planetary gearbox manufacturer, Neugart has been supporting all industrial sectors for over half a century. Our products get the job done, regardless of how complex our customers' needs may be. Over the years, we have become the foremost leaders in drive technology specialization. Our vast industry knowledge allows us to support customers with their most challenging projects and to offer the latest technologies and solutions.

Our constantly expanding product inventory provides effective solutions for virtually every application of gearbox technology.

Our customers' challenges and concerns are always at the forefront of our thoughts. Listening to and reflecting upon problems helps us to expand our knowledge, in order to achieve the highest standard in design and innovation. Our mechanical and industrial expertise includes everything from automation and robotics to food and packaging to medical and pharmaceutical.

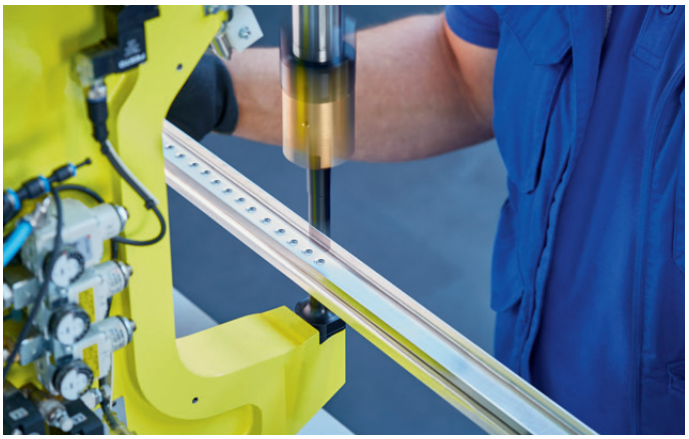

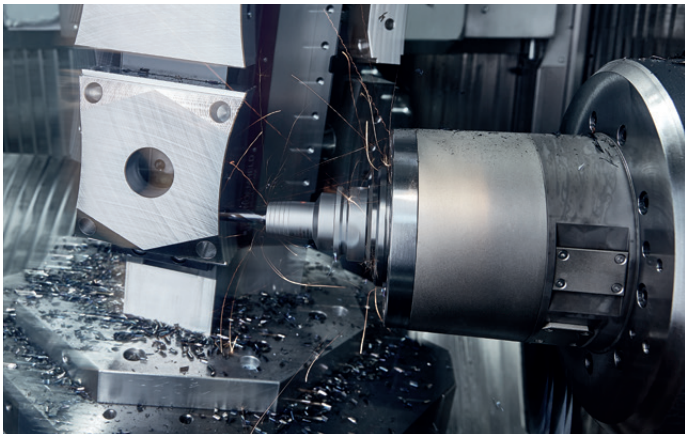

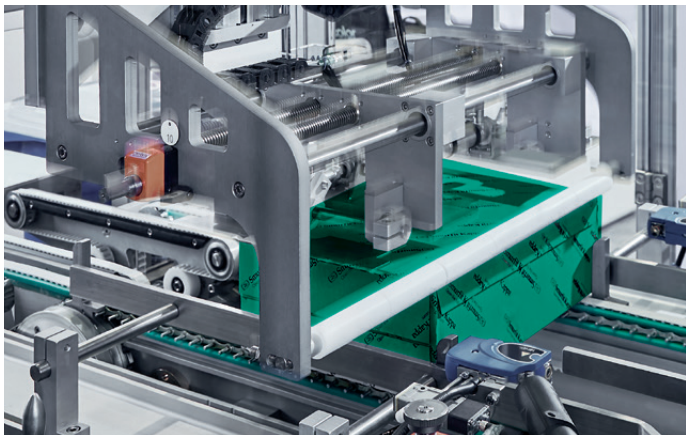

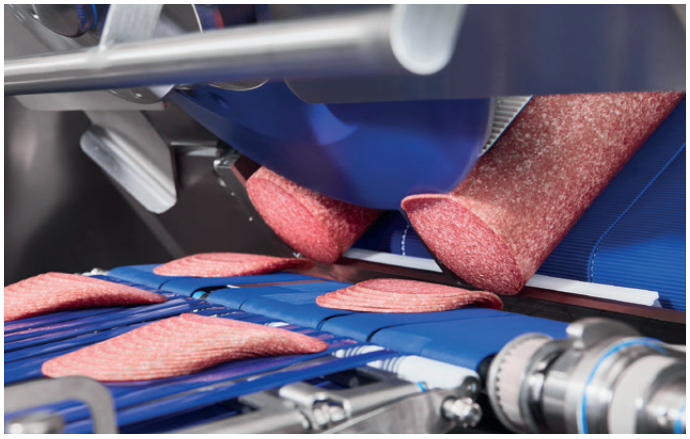

Neugart gearboxes are world-class products.

Unique possibilities are available for countless industries as we continuously optimize all technologies and services related to our products. We invite you to benefit from our competitive advantages.

Automation and robotics

- Cost-effective gearbox solutions
- Smart software for all product aspects



Packaging machines

- Dynamic and hardwearing gearboxes
- Cost-effective gearbox solutions



Machine tools

- Extensive application experience
- Reliable and long-lasting gearboxes



Food and beverage industry

- Certified products
- Worldwide, comprehensive application knowledge



Medical engineering and pharmaceuticals

- Smart software for all product aspects
- Certified products



Printing industry

- Extensive application experience
- Higher quality end product

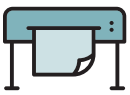

Agricultural machinery

- Reliable and long-lasting gearboxes
- Suitable for use in harsh conditions



Neugart's fully developed product portfolio can handle virtually all applications with controlled motion. We are already precision gearbox partners in over 40 industries.

Economy Line coaxial gearboxes



PLE

Page 18

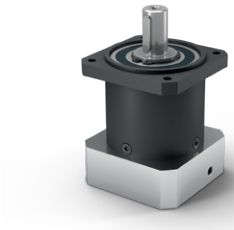

PLQE

Page 24



PLPE

Page 30



PLHE

Page 36

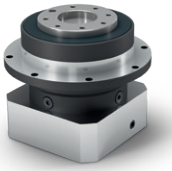

PLFE

Page 42

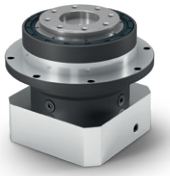

PFHE

Page 48

Economy Line right angle gearboxes



WPLE

Page 54



WPLQE

Page 60



WPLPE

Page 66



WPLHE

Page 72

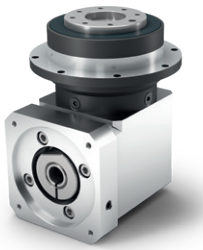

WPLFE

Page 78

Precision Line coaxial gearboxes



PSBN

Page 84



PSN

Page 90



PLN

Page 96

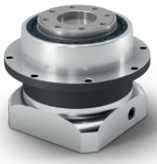

PSFN

Page 102

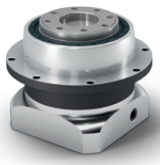

PLFN

Page 108

Precision Line right angle gearboxes



WPLN

Page 114



WPSFN

Page 120



WGN

Page 126

Planetary gearboxes with mounted pinion

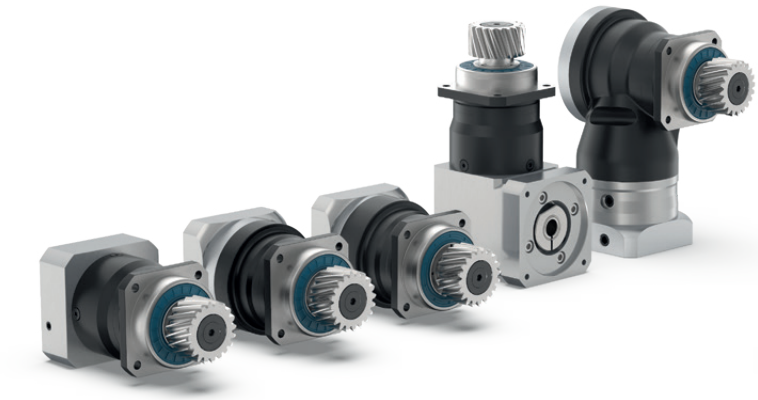

PK1

Page 132



PM1

Page 132



PM2

Page 132

Application-specific gearboxes

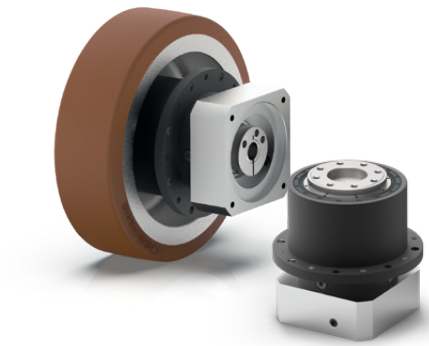

NGV

Page 138



HLAE

Page 146

High efficiency

Planetary gearboxes have an excellent efficiency of up to 98%. The torque being transmitted is distributed over several gearing elements, so that the friction per engaged tooth is reduced.

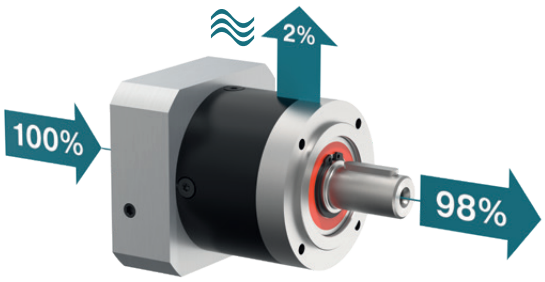

Can be mounted in all spatial orientations

Thanks to the optimized lubrication concept, our gearboxes can be operated in any position without any loss of performance.

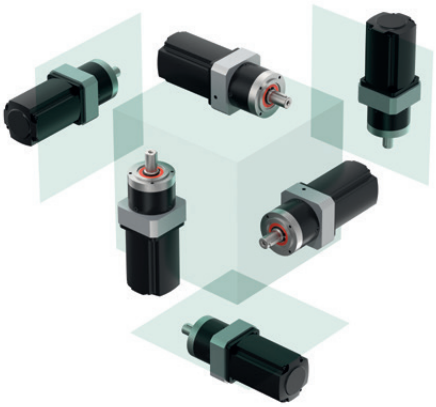

Individual adaptation of the drive flange to the motor

From a wide range of different motor adapters, the right adapter for up to 20,000 different motors can be found with just a few clicks in the Neugart Tec Data Finder (TDF).

Lifetime lubrication for maintenance-free operation

Use of high-quality lubricants, optimized specifically for the requirements in planetary gearboxes, makes Neugart gearboxes maintenance-free over their service life under normal operating conditions.

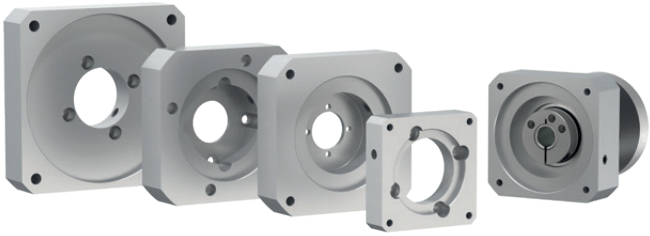

Clamping systems with optimized mass moment of inertia

The clamping systems of our gearboxes are optimized for low weight, which can increase the dynamics of the entire drive train.

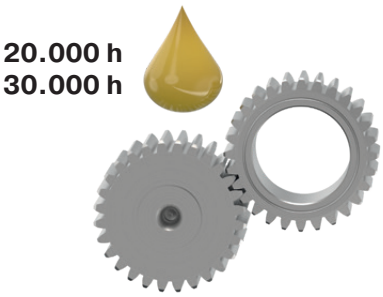

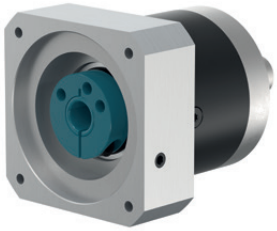

Our program at a glance.

In this overview you will find a direct comparison of the key features of our products.

Economy Line		Nominal output torque	Backlash	Bearing load	Protection class	Running noise	Input speeds	Torsional stiffness	Wide range of ratios
PLE		▬▬	▬▬	▬	▬▬	▬▬	▬▬▬▬	▬▬	▬▬▬▬
PLQE		▬▬	▬▬	▬▬	▬▬	▬▬	▬▬▬▬	▬▬	▬▬▬▬
PLPE		▬▬	▬▬	▬▬	▬▬	▬▬	▬▬▬▬	▬▬	▬▬▬
PLHE		▬▬	▬▬	▬▬▬	▬▬▬	▬▬	▬▬▬	▬▬	▬▬▬
PLFE		▬▬	▬▬	▬▬	▬▬	▬▬	▬▬▬▬	▬▬▬	▬▬▬
PFHE		▬▬	▬▬	▬▬▬▬	▬▬▬	▬▬	▬▬▬	▬▬▬▬	▬▬▬
WPLE		▬	▬	▬	▬▬	▬	▬▬▬	▬	▬▬▬▬
WPLQE		▬	▬	▬▬	▬▬	▬	▬▬▬	▬	▬▬▬▬
WPLPE		▬	▬	▬▬	▬▬	▬	▬▬▬	▬	▬▬▬
WPLHE		▬	▬	▬▬▬	▬▬▬	▬	▬▬	▬	▬▬▬
WPLFE		▬	▬	▬▬	▬▬	▬	▬▬▬	▬▬	▬▬▬

▬ Standard ▬▬▬▬ Excellent

Precision Line		Nominal output torque	Backlash	Bearing load	Protection class	Running noise	Input speeds	Torsional stiffness	Wide range of ratios
PSBN		▬▬▬▬	▬▬▬▬	▬▬▬	▬▬▬▬	▬▬▬▬	▬▬▬▬	▬▬▬	▬▬▬
PSN		▬▬▬▬	▬▬▬▬	▬▬▬	▬▬▬	▬▬▬▬	▬▬▬	▬▬▬	▬▬▬
PLN		▬▬▬▬	▬▬▬▬	▬▬▬	▬▬▬	▬▬	▬▬	▬▬▬	▬▬▬
PSFN		▬▬▬▬	▬▬▬▬	▬▬▬▬	▬▬▬	▬▬▬▬	▬▬▬	▬▬▬▬	▬▬
PLFN		▬▬▬▬	▬▬▬▬	▬▬▬▬	▬▬▬	▬▬	▬▬	▬▬▬▬	▬▬
WPLN		▬▬▬	▬▬▬▬	▬▬▬	▬▬▬	▬▬▬	▬	▬▬	▬▬
WPSFN		▬▬▬	▬▬▬▬	▬▬▬	▬▬▬	▬▬▬	▬	▬▬	▬▬
WGN		▬▬▬	▬▬▬	▬▬▬	▬▬▬	▬▬▬	▬	▬▬	▬

Application specific gearboxes		Nominal output torque	Backlash	Bearing load	Protection class	Running noise	Input speeds	Torsional stiffness	Wide range of ratios
HLAE		▬▬	▬▬	▬	▬▬▬▬	▬▬	▬▬▬	▬▬	▬▬▬
NGV		▬▬	▬▬	▬▬▬▬	▬▬▬	▬▬	▬▬▬	▬▬▬▬	▬▬

▬ Standard ▬▬▬▬ Excellent

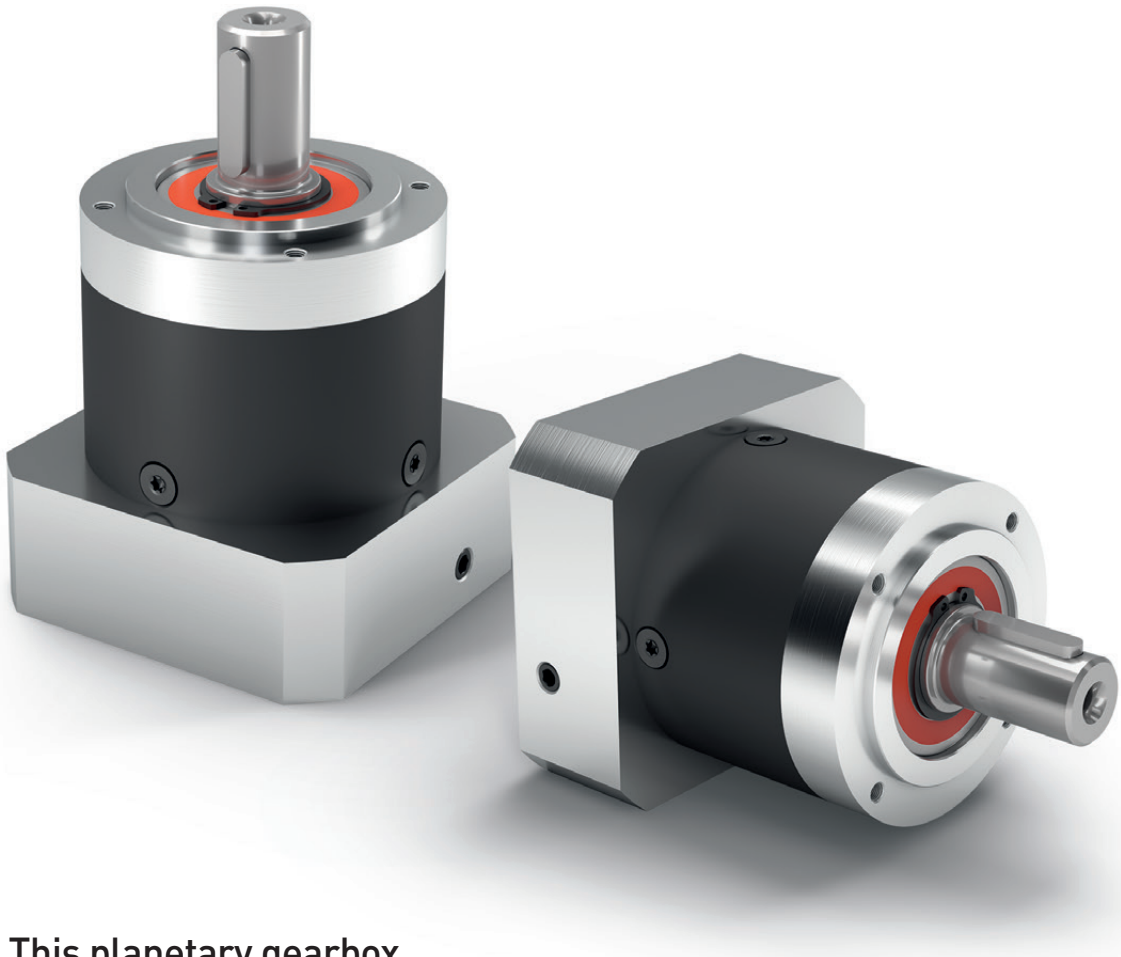

PLE

Unparalleled: This planetary gearbox maintains its maximum efficiency even at the highest speeds

The **PLE** is our price/performance wonder. It is particularly lightweight, extremely powerful and yet still suitable for demanding production cycles thanks to its low-friction bearing concept and optimized lubrication. A real powerhouse at an attractive and fair price.

Nominal output torque	**5 - 800 Nm**
Radial force	**200 - 5000 N**
Axial force	**200 - 7000 N**
Torsional backlash	**6 - 22 arcmin**
Protection class	**IP54**

Frame sizes

40 **60** **80** **120** **160**

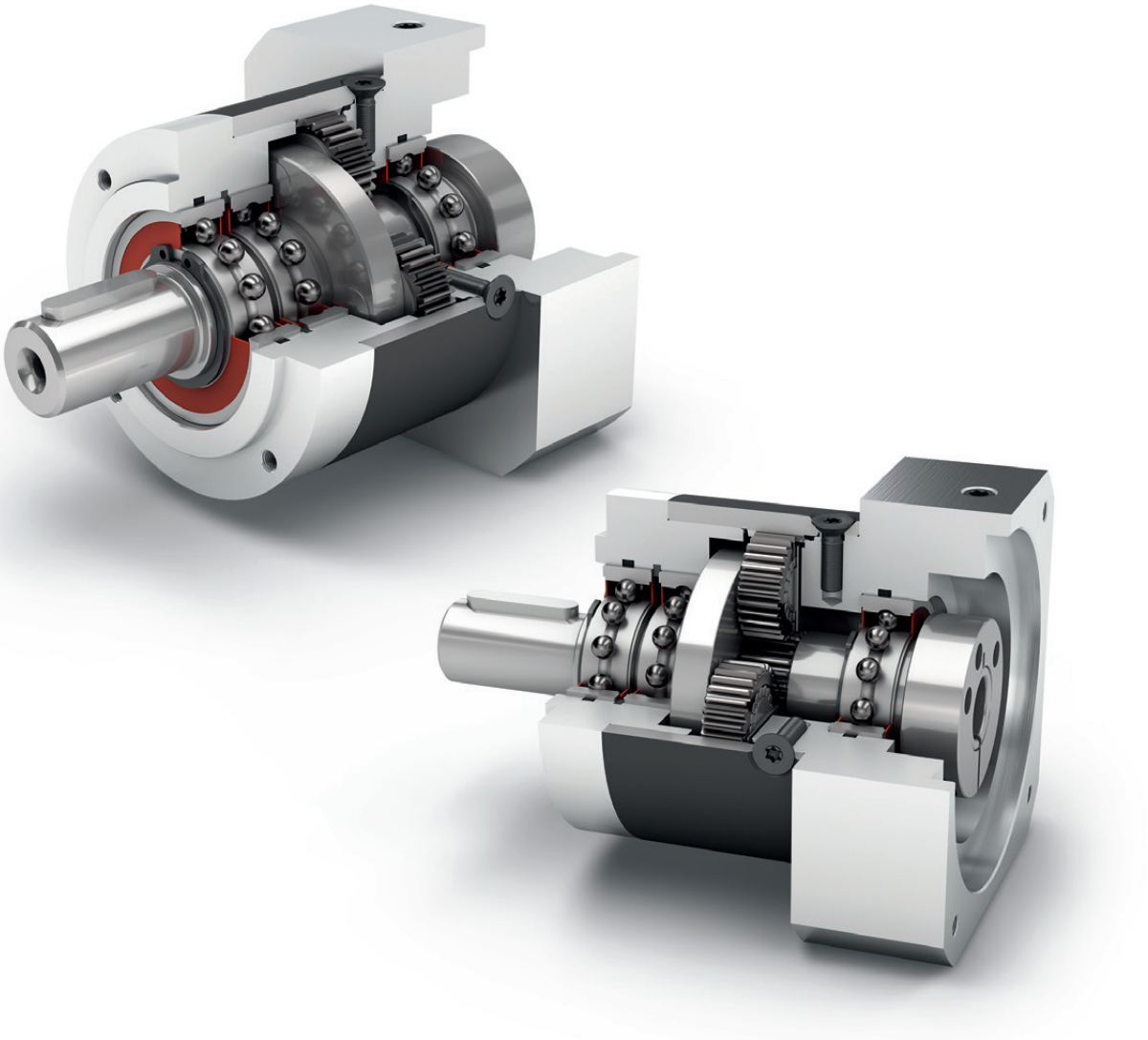

Economy Line

Coaxial gearbox

Equidirectional rotation

Spur gear

Round type output flange

Low-friction deep groove ball bearings

3 i 512

High ratio variety i=3 up to i=512

Planet carrier in disc design

Detailed explanations of the technical features starting on page 173.

Code	Gearbox characteristics			PLE040	PLE060	PLE080	PLE120	PLE160	p[1]
	Service life (L_{10h})	t_L	h	30,000					
	Efficiency at full load[2]	η	%	98					1
				97					2
				92					3
	Min. operating temperature	T_{min}	°C (°F)	-25 (-13)					
	Max. operating temperature	T_{max}		90 (194)					
	Protection class			IP54					
S	Standard lubrication			Grease (lifetime lubrication)					
F	Food grade lubrication			Grease (lifetime lubrication)					
L	Low temperature lubrication[3]			Grease (lifetime lubrication)					
	Installation position			Any					
S	Standard backlash	j_t	arcmin	< 15	< 10	< 7	< 7	< 6	1
				< 19	< 12	< 9	< 9	< 9	2
				< 22	< 15	< 11	< 11	-	3
	Torsional stiffness[2]	c_g	Nm /arcmin (lb$_f$.in/ arcmin)	0.7 - 1.0 (6 - 8)	2.1 - 2.8 (19 - 25)	7.2 - 10.0 (64 - 89)	15.5 - 21.0 (137 - 186)	57.5 - 69.0 (509 - 611)	1
				0.8 - 1.0 (7 - 9)	2.3 - 2.8 (20 - 25)	7.9 - 10.4 (70 - 92)	17.5 - 22.0 (155 - 195)	61.0 - 75.0 (540 - 664)	2
				0.8 - 1.0 (7 - 9)	2.3 - 2.8 (20 - 25)	7.9 - 10.5 (70 - 93)	17.5 - 22.0 (155 - 195)	-	3
	Gearbox weight[2]	m_G	kg (lb$_m$)	0.3 - 0.4 (0.7 - 0.8)	0.9 (1.9)	2.1 (4.6)	5.6 - 5.7 (12.3 - 12.6)	17.4 - 17.6 (38.4 - 38.8)	1
				0.4 - 0.5 (1.0 - 1.2)	1.1 (2.3)	2.6 (5.7)	7.3 - 7.5 (16.1 - 16.6)	23.5 - 23.7 (51.8 - 52.3)	2
				0.5 (1.2)	1.3 (2.8)	3.1 (6.7)	9.2 - 9.4 (20.2 - 20.6)	-	3
S	Standard surface			Housing: Steel – heat-treated and post-oxidized (black)					
	Running noise[4]	Q_g	dB(A)	58	58	60	65	70	
	Max. bending moment based on the gearbox input flange[5]	M_b	Nm (lb$_f$.in)	4,5 (40)	12 (106)	16 (142)	40 (354)	140 (1239)	

Output shaft loads			PLE040	PLE060	PLE080	PLE120	PLE160	p[1]
Radial force for 20,000 h[6][7]	$F_{r\,20.000\,h}$	N (lb$_f$)	200 (45)	400 (90)	750 (169)	1750 (393)	5000 (1124)	
Axial force for 20,000 h[6][7]	$F_{a\,20.000\,h}$		200 (45)	500 (112)	1000 (225)	2500 (562)	7000 (1574)	
Radial force for 30,000 h[6][7]	$F_{r\,30.000\,h}$		160 (36)	340 (76)	650 (146)	1500 (337)	4200 (944)	
Axial force for 30,000 h[6][7]	$F_{a\,30.000\,h}$		160 (36)	450 (101)	900 (202)	2100 (472)	6000 (1349)	
Maximum radial force[7][8]	$F_{r\,Stat}$		200 (45)	700 (157)	1250 (281)	2000 (450)	5000 (1124)	
Maximum axial force[7][8]	$F_{a\,Stat}$		240 (54)	800 (180)	1600 (360)	3800 (854)	11000 (2473)	
Tilting moment for 20,000 h[6][8]	$M_{K\,20.000\,h}$	Nm (lb$_f$.in)	5 (44)	14 (124)	31 (274)	101 (894)	474 (4195)	
Tilting moment for 30,000 h[6][8]	$M_{K\,30.000\,h}$		4 (35)	12 (106)	27 (239)	86 (761)	398 (3523)	

Moment of inertia			PLE040	PLE060	PLE080	PLE120	PLE160	p[1]
Mass moment of inertia[2]	J	kgcm^2 (lb$_f$.in.s^{2}10^{-4})	0.014 - 0.027 (0.124 - 0.239)	0.065 - 0.128 (0.575 - 1.133)	0.359 - 0.654 (3.177 - 5.788)	1.378 - 2.361 (12.196 - 20.897)	3.726 - 11.999 (32.978 - 106.200)	1
			0.015 - 0.026 (0.133 - 0.230)	0.066 - 0.121 (0.584 - 1.071)	0.365 - 0.613 (3.231 - 5.426)	1.414 - 2.288 (12.515 - 20.251)	3.502 - 10.087 (30.995 - 89.277)	2
			0.015 - 0.025 (0.133 - 0.221)	0.066 - 0.076 (0.584 - 0.673)	0.365 - 0.590 (3.231 - 5.222)	1.413 - 2.196 (12.506 - 19.436)	-	3

(1) Number of stages

(2) The ratio-dependent values can be retrieved in Tec Data Finder – www.neugart.com

(3) T_{min} = -40°C. Optimal operating temperature max. 50°C

(4) Sound pressure level from 1 m, measured on input running at n_1=3000 rpm no load; i=5

(5) Max. motor weight* in kg = 0.2 x M_b / motor length in m
* with symmetrically distributed motor weight
* with horizontal and stationary mounting

(6) These values are based on an output shaft speed of n_2=100 rpm

(7) Based on center of output shaft

(8) Other (sometimes higher) values following changes to T_{2N}, F_r, F_a, cycle, and service life of bearing. Application specific configuration with NCP – www.neugart.com

Output torques			PLE040	PLE060	PLE080	PLE120	PLE160	i[1]	p[2]
Nominal output torque[3][4]	T_{2N}	Nm (lb_f.in)	11 (97)	28 (248)	85 (752)	115 (1018)	400 (3540)	3	1
			15 (133)	38 (336)	115 (1018)	155 (1372)	450 (3983)	4	
			14 (124)	40 (354)	110 (974)	195 (1726)	450 (3983)	5	
			8,5 (75)	25 (221)	65 (575)	135 (1195)	-	7	
			6 (53)	18 (159)	50 (443)	120 (1062)	450 (3983)	8	
			5 (44)	15 (133)	38 (336)	95 (841)	-	10	
			16,5 (146)	44 (389)	130 (1151)	210 (1859)	-	9	2
			20 (177)	44 (389)	120 (1062)	260 (2301)	800 (7081)	12	
			18 (159)	44 (389)	110 (974)	230 (2036)	700 (6196)	15	
			20 (177)	44 (389)	120 (1062)	260 (2301)	800 (7081)	16	
			20 (177)	44 (389)	120 (1062)	260 (2301)	800 (7081)	20	
			18 (159)	40 (354)	110 (974)	230 (2036)	700 (6196)	25	
			20 (177)	44 (389)	120 (1062)	260 (2301)	800 (7081)	32	
			18 (159)	40 (354)	110 (974)	230 (2036)	700 (6196)	40	
			7,5 (66)	18 (159)	50 (443)	120 (1062)	450 (3983)	64	
			20 (177)	44 (389)	110 (974)	260 (2301)	-	60	3
			20 (177)	44 (389)	120 (1062)	260 (2301)	-	80	
			20 (177)	44 (389)	120 (1062)	260 (2301)	-	100	
			18 (159)	44 (389)	110 (974)	230 (2036)	-	120	
			20 (177)	44 (389)	120 (1062)	260 (2301)	-	160	
			18 (159)	40 (354)	110 (974)	230 (2036)	-	200	
			20 (177)	44 (389)	120 (1062)	260 (2301)	-	256	
			18 (159)	40 (354)	110 (974)	230 (2036)	-	320	
			7,5 (66)	18 (159)	50 (443)	120 (1062)	-	512	
Max. output torque[4][5]	T_{2max}	Nm (lb_f.in)	17,5 (155)	45 (398)	136 (1204)	184 (1629)	640 (5664)	3	1
			24 (212)	61 (540)	184 (1629)	248 (2195)	720 (6373)	4	
			22 (195)	64 (566)	176 (1558)	312 (2761)	720 (6373)	5	
			13,5 (119)	40 (354)	104 (920)	216 (1912)	-	7	
			10 (89)	29 (257)	80 (708)	192 (1699)	720 (6373)	8	
			8 (71)	24 (212)	61 (540)	152 (1345)	-	10	
			26 (230)	70 (620)	208 (1841)	336 (2974)	-	9	2
			32 (283)	70 (620)	192 (1699)	416 (3682)	1280 (11329)	12	
			29 (257)	70 (620)	176 (1558)	368 (3257)	1120 (9913)	15	
			32 (283)	70 (620)	192 (1699)	416 (3682)	1280 (11329)	16	
			32 (283)	70 (620)	192 (1699)	416 (3682)	1280 (11329)	20	
			29 (257)	64 (566)	176 (1558)	368 (3257)	1120 (9913)	25	
			32 (283)	70 (620)	192 (1699)	416 (3682)	1280 (11329)	32	
			29 (257)	64 (566)	176 (1558)	368 (3257)	1120 (9913)	40	
			12 (106)	29 (257)	80 (708)	192 (1699)	720 (6373)	64	
			32 (283)	70 (620)	176 (1558)	416 (3682)	-	60	3
			32 (283)	70 (620)	192 (1699)	416 (3682)	-	80	
			32 (283)	70 (620)	192 (1699)	416 (3682)	-	100	
			29 (257)	70 (620)	176 (1558)	368 (3257)	-	120	
			32 (283)	70 (620)	192 (1699)	416 (3682)	-	160	
			29 (257)	64 (566)	176 (1558)	368 (3257)	-	200	
			32 (283)	70 (620)	192 (1699)	416 (3682)	-	256	
			29 (257)	64 (566)	176 (1558)	368 (3257)	-	320	
			12 (106)	29 (257)	80 (708)	192 (1699)	-	512	

(1) Ratios ($i=n_1/n_2$)
(2) Number of stages
(3) Application specific configuration with NCP – www.neugart.com
(4) Values for feather key (code "A"): for repeated load
(5) 30,000 rotations of the output shaft permitted; see page 166

Output torques			PLE040	PLE060	PLE080	PLE120	PLE160	i(1)	p(2)
Emergency stop torque(3)	T_{2Stop}	Nm (lb_f.in)	22,5 (199)	66 (584)	180 (1593)	390 (3452)	800 (7081)	3	1
			30 (266)	88 (779)	240 (2124)	520 (4602)	900 (7966)	4	
			36 (319)	80 (708)	220 (1947)	500 (4425)	900 (7966)	5	
			26 (230)	80 (708)	178 (1575)	340 (3009)	-	7	
			27 (239)	80 (708)	190 (1682)	380 (3363)	900 (7966)	8	
			27 (239)	80 (708)	200 (1770)	480 (4248)	-	10	
			33 (292)	88 (779)	260 (2301)	500 (4425)	-	9	2
			40 (354)	88 (779)	240 (2124)	520 (4602)	1600 (14161)	12	
			36 (319)	88 (779)	220 (1947)	500 (4425)	1400 (12391)	15	
			40 (354)	88 (779)	240 (2124)	520 (4602)	1600 (14161)	16	
			40 (354)	88 (779)	240 (2124)	520 (4602)	1600 (14161)	20	
			36 (319)	80 (708)	220 (1947)	500 (4425)	1400 (12391)	25	
			40 (354)	88 (779)	240 (2124)	520 (4602)	1600 (14161)	32	
			36 (319)	80 (708)	220 (1947)	500 (4425)	1400 (12391)	40	
			27 (239)	80 (708)	190 (1682)	380 (3363)	900 (7966)	64	
			40 (354)	88 (779)	220 (1947)	520 (4602)	-	60	3
			40 (354)	88 (779)	240 (2124)	520 (4602)	-	80	
			40 (354)	88 (779)	240 (2124)	520 (4602)	-	100	
			36 (319)	88 (779)	220 (1947)	500 (4425)	-	120	
			40 (354)	88 (779)	240 (2124)	520 (4602)	-	160	
			36 (319)	80 (708)	220 (1947)	500 (4425)	-	200	
			40 (354)	88 (779)	240 (2124)	520 (4602)	-	256	
			36 (319)	80 (708)	220 (1947)	500 (4425)	-	320	
			27 (239)	80 (708)	190 (1682)	380 (3363)	-	512	

Input speeds			PLE040	PLE060	PLE080	PLE120	PLE160	i(1)	p(2)
Average thermal input speed at T_{2N} and S1(4)(5)	n_{1N}	rpm	5000	4500	4000(6)	3400(6)	1350(6)	3	1
			5000	4500	3900(6)	3500(6)	1450(6)	4	
			5000	4500	4000(6)	3500(6)	1700(6)	5	
			5000	4500	4000	3500	-	7	
			5000	4500	4000	3500	2200(6)	8	
			5000	4500	4000	3500	-	10	
			5000	4500	4000(6)	3500(6)	-	9	2
			5000	4500	4000(6)	3500(6)	1600(6)	12	
			5000	4500	4000	3500(6)	1900(6)	15	
			5000	4500	4000	3500(6)	1800(6)	16	
			5000	4500	4000	3500	2100(6)	20	
			5000	4500	4000	3500	2400(6)	25	
			5000	4500	4000	3500	2700(6)	32	
			5000	4500	4000	3500	3000(6)	40	
			5000	4500	4000	3500	3000	64	
			5000	4500	4000	3500	-	60	3
			5000	4500	4000	3500	-	80	
			5000	4500	4000	3500	-	100	
			5000	4500	4000	3500	-	120	
			5000	4500	4000	3500	-	160	
			5000	4500	4000	3500	-	200	
			5000	4500	4000	3500	-	256	
			5000	4500	4000	3500	-	320	
			5000	4500	4000	3500	-	512	
Max. mechanical input speed(4)	n_{1Limit}	rpm	18,000	13,000	7000	6500	6500		

(1) Ratios ($i=n_1/n_2$)
(2) Number of stages
(3) Permitted 1000 times
(4) Application-specific speed configurations with NCP – www.neugart.com
(5) See page 166 for the definition
(6) Average thermal input speed at 50% T_{2N} and S1

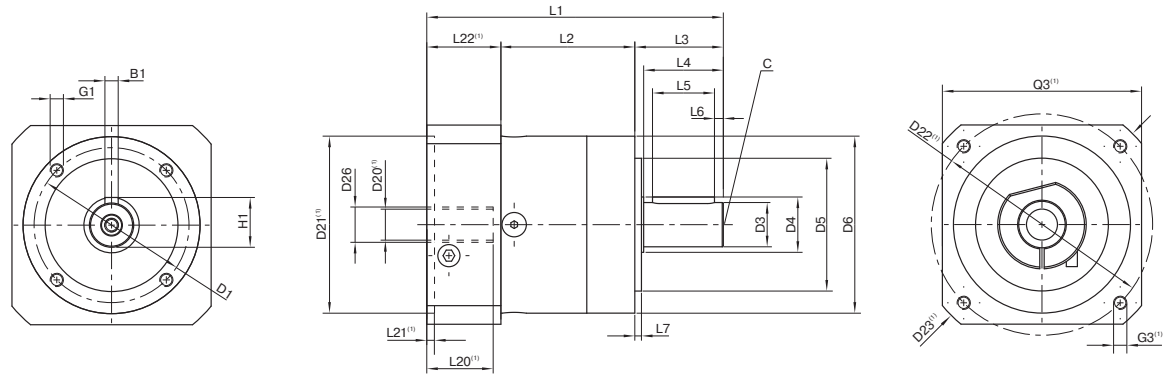

Drawing corresponds to a PLE060 / 1-stage / output shaft with feather key / 11 mm clamping system / motor adaptation – one part / B5 flange type motor

(1) The dimensions vary with the motor/gearbox flange. The input flange dimensions can be retrieved for each specific motor in Tec Data Finder at www.neugart.com

Geometry(2)			**PLE040**	**PLE060**	**PLE080**	**PLE120**	**PLE160**	**p**(3)	**Code**
Pitch circle diameter output	D1		34 (1.339)	52 (2.047)	70 (2.756)	100 (3.937)	145 (5.709)		
Shaft diameter output	D3	h7	10 (0.394)	14 (0.551)	20 (0.787)	25 (0.984)	40 (1.575)		
Shaft collar output	D4		12 (0.472)	17 (0.669)	25 (0.984)	35 (1.378)	55 (2.165)		
Centering diameter output	D5	h7	26 (1.024)	40 (1.575)	60 (2.362)	80 (3.150)	130 (5.118)		
Housing diameter	D6		40 (1.575)	60 (2.362)	80 (3.150)	115 (4.528)	160 (6.299)		
Mounting thread x depth	G1	4x	M4x6	M5x8	M6x10	M10x16	M12x20		
Min. total length	L1		88.5 (3.484)	106 (4.173)	133.5 (5.256)	176.5 (6.949)	255.5 (10.059)	1	
			106.5 (4.193)	118.5 (4.665)	150.5 (5.925)	204 (8.032)	305 (12.008)	2	
			114 (4.488)	131 (5.157)	168,5 (6.634)	231.5 (9.114)	-	3	
Housing length	L2		39 (1.535)	47 (1.850)	60 (2.362)	74 (2.913)	104 (4.094)	1	
			51,5 (2.028)	59.5 (2.343)	78 (3.071)	102 (4.016)	153.5 (6.043)	2	
			64.5 (2.539)	72 (2.835)	95,5 (3.760)	129,5 (5.098)	-	3	
Shaft length output	L3		26 (1.024)	35 (1.378)	40 (1.575)	55 (2.165)	87 (3.425)		
Centering depth output	L7		2 (0.079)	3 (0.118)	3 (0.118)	4 (0.157)	5 (0.197)		
Motor shaft diameter j6/k6	D20		More information on page 163/164						
Clamping system diameter input	D26								
Output shaft with feather key (DIN 6885-1)			A 3x3x18	A 5x5x25	A 6x6x28	A 8x7x40	A 12x8x65		A
Feather key width (DIN 6885-1)	B1		3 (0.118)	5 (0.197)	6 (0.236)	8 (0.315)	12 (0.472)		
Shaft height including feather key (DIN 6885-1)	H1		11.2 (0.441)	16 (0.630)	22.5 (0.886)	28 (1.102)	43 (1.693)		
Shaft length from shoulder	L4		23 (0.906)	30 (1.181)	36 (1.417)	50 (1.969)	80 (3.150)		
Feather key length	L5		18 (0.709)	25 (0.984)	28 (1.102)	40 (1.575)	65 (2.559)		
Distance from shaft end	L6		2.5 (0.098)	2.5 (0.098)	4 (0.157)	5 (0.197)	8 (0.315)		
Center hole (DIN 332. type DR)	C		M3x9	M5x12.5	M6x16	M10x22	M16x36		
Smooth output shaft									B
Shaft length from shoulder	L4		23 (0.906)	30 (1.181)	36 (1.417)	50 (1.969)	80 (3.150)		

(2) Dimensions in mm
(3) Number of stages

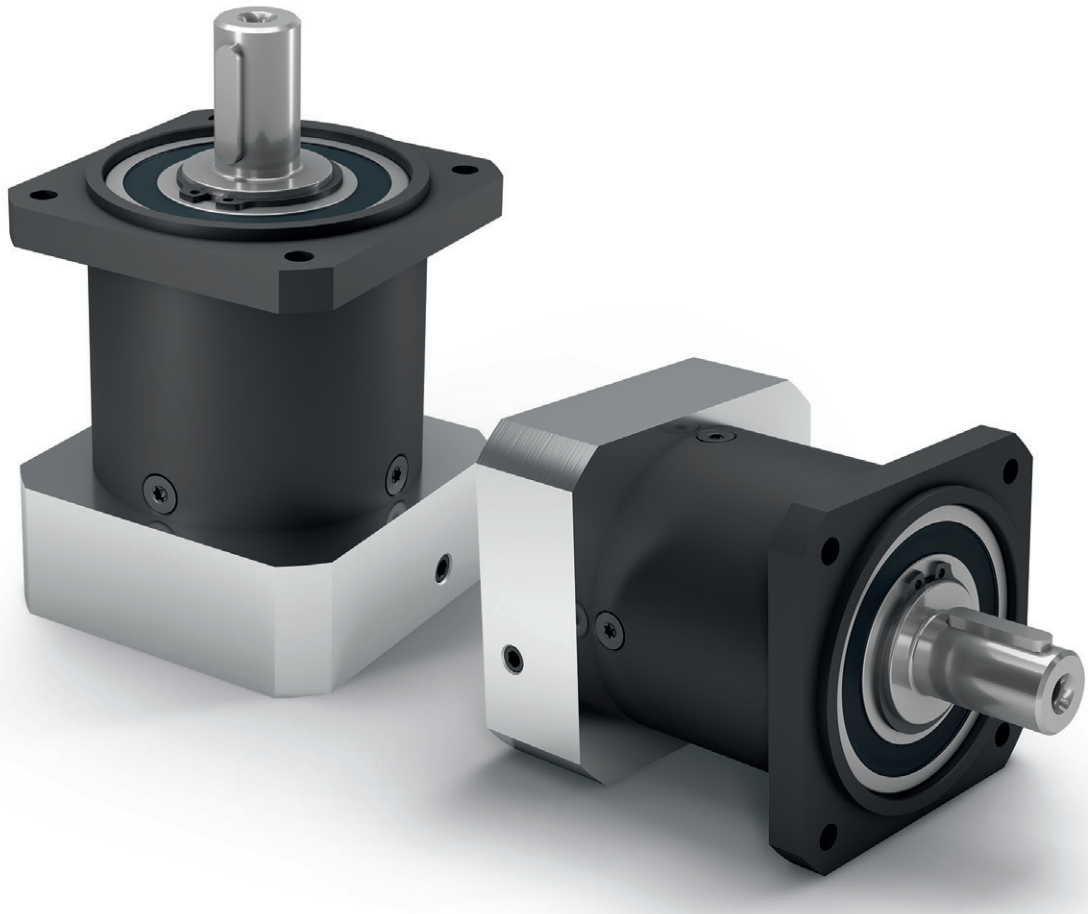

PLQE

The easy to install planetary gearbox absorbs high forces with low heat generation

Our **PLQE** is uncomplicated and powerful. It can be connected directly to your installation without the need for an intermediate flange. The larger deep groove ball bearings on the output allow higher axial and radial forces to be absorbed. Thanks to its favorable efficiency, this means that it always operates reliably even when production cycles are demanding.

Nominal output torque	**5 - 260 Nm**
Radial force	**390 - 2950 N**
Axial force	**620 - 2500 N**
Torsional backlash	**7 - 15 arcmin**
Protection class	**IP54**

Frame sizes

40 **60** **80** **120**

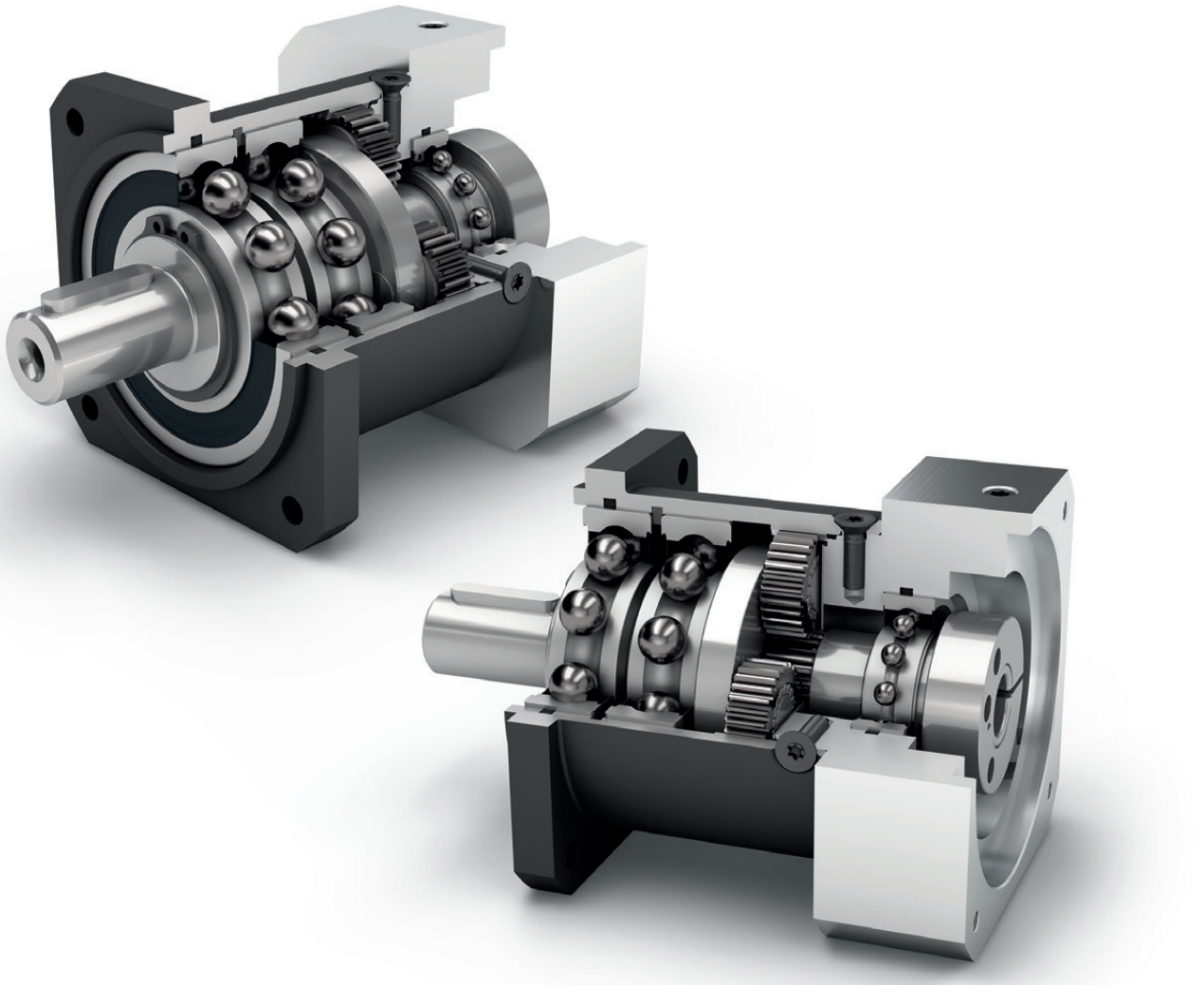

- Economy Line
- Equidirectional rotation
- Square type output flange
- High ratio variety i=3 up to i=512
- Coaxial gearbox
- Spur gear
- Reinforced deep groove ball bearings
- Planet carrier in disc design

Detailed explanations of the technical features starting on page 173.

Code	Gearbox characteristics			PLQE040	PLQE060	PLQE080	PLQE120	p(1)
	Service life (L_{10h})	t_L	h	30,000				
	Efficiency at full load(2)	η	%	98				1
				97				2
				92				3
	Min. operating temperature	T_{min}	°C (°F)	-25 (-13)				
	Max. operating temperature	T_{max}		90 (194)				
	Protection class			IP54				
S	Standard lubrication			Grease (lifetime lubrication)				
F	Food grade lubrication			Grease (lifetime lubrication)				
L	Low temperature lubrication(3)			Grease (lifetime lubrication)				
	Installation position			Any				
S	Standard backlash	j_t	arcmin	< 15	< 10	< 7	< 7	1
				< 19	< 12	< 9	< 9	2
				< 22	< 15	< 11	< 11	3
	Torsional stiffness(2)	c_g	Nm /arcmin (lb$_f$.in/ arcmin)	1.2 - 2.2 (10 - 19)	2.8 - 4.0 (25 - 35)	8.5 - 12.6 (75 - 112)	14.0 - 18.5 (124 - 164)	1
				1.4 - 2.5 (12 - 22)	3.3 - 4.1 (29 - 36)	9.4 - 13.3 (83 - 118)	15.6 - 19.0 (138 - 168)	2
				1.5 - 2.6 (13 - 23)	3.3 - 4.1 (29 - 36)	9.4 - 13.4 (83 - 119)	15.6 - 19.0 (138 - 168)	3
	Gearbox weight (2)	m_G	kg (lb$_m$)	0.4 (0.9)	1.1 (2.4)	2.7 - 2.9 (5.8 - 6.5)	6.4 - 6.5 (14.1 - 14.3)	1
				0.5 (1.1)	1.3 (2.8)	3.4 - 3.5 (7.5 - 7.6)	8.1 - 8.3 (17.9 - 18.3)	2
				0.6 (1.3)	1.5 (3.3)	3.9 - 4.0 (8.6 - 8.8)	9.9 - 10.1 (21.9 - 22.4)	3
S	Standard surface			Housing: Steel – heat-treated and post-oxidized (black)				
	Running noise(4)	Q_g	dB(A)	58	58	60	65	
	Max. bending moment based on the gearbox input flange(5)	M_b	Nm (lb$_f$.in)	4,5 (40)	12 (106)	16 (142)	40 (354)	

Output shaft loads			PLQE040	PLQE060	PLQE080	PLQE120	p(1)
Radial force for 20,000 h(6)(7)	$F_{r\,20.000\,h}$	N (lb$_f$)	250 - 390 (56 - 88)	900 (202)	2050 (461)	2950 (663)	
Axial force for 20,000 h(6)(7)	$F_{a\,20.000\,h}$		620 (139)	1000 (225)	2500 (562)	2500 (562)	
Radial force for 30,000 h(6)(7)	$F_{r\,30.000\,h}$		250 - 340 (56 - 76)	700 (157)	1700 (382)	2400 (540)	
Axial force for 30,000 h(6)(7)	$F_{a\,30.000\,h}$		620 (139)	800 (180)	2000 (450)	2100 (472)	
Maximum radial force(7)(8)	$F_{r\,Stat}$		520 (117)	1500 (337)	2500 (562)	4000 (899)	
Maximum axial force(7)(8)	$F_{a\,Stat}$		620 (139)	1950 (438)	3800 (854)	3800 (854)	
Tilting moment for 20,000 h(6)(8)	$M_{K\,20.000\,h}$	Nm (lb$_f$.in)	7 - 10 (58 - 90)	37 (327)	101 (894)	232 (2053)	
Tilting moment for 30,000 h(6)(8)	$M_{K\,30.000\,h}$		7 - 9 (58 - 79)	29 (257)	84 (743)	188 (1664)	

Moment of inertia			PLQE040	PLQE060	PLQE080	PLQE120	p(1)
Mass moment of inertia(2)	J	kgcm^2 (lb$_f$.in.s^{2}10^{-4})	0.015 - 0.029 (0.133 - 0.257)	0.066 - 0.142 (0.584 - 1.257)	0.371 - 0.783 (3.284 - 6.930)	1.381 - 2.393 (12.223 - 21.180)	1
			0.015 - 0,026 (0.133 - 0.230)	0.066 - 0.123 (0.584 - 1.089)	0.366 - 0.625 (3.239 - 5.532)	1.414 - 2.292 (12.515 - 20.286)	2
			0.015 - 0.025 (0.133 - 0.221)	0.066 - 0.076 (0.584 - 0.673)	0.365 - 0.590 (3.231 - 5.222)	1.413 - 2.196 (12.506 - 19.436)	3

(1) Number of stages
(2) The ratio-dependent values can be retrieved in Tec Data Finder – www.neugart.com
(3) T_{min} = -40°C. Optimal operating temperature max. 50°C
(4) Sound pressure level from 1 m, measured on input running at n_1=3000 rpm no load; i=5
(5) Max. motor weight* in kg = 0.2 x M_b / motor length in m
* with symmetrically distributed motor weight
* with horizontal and stationary mounting
(6) These values are based on an output shaft speed of n_2=100 rpm
(7) Based on center of output shaft
(8) Other (sometimes higher) values following changes to T_{2N}, F_r, F_a, cycle, and service life of bearing. Application specific configuration with NCP – www.neugart.com

Output torques			PLQE040	PLQE060	PLQE080	PLQE120	i[1]	p[2]
Nominal output torque[3][4]	T_{2N}	Nm (lb_f.in)	11 (97)	28 (248)	85 (752)	115 (1018)	3	1
			15 (133)	38 (336)	115 (1018)	155 (1372)	4	
			14 (124)	40 (354)	110 (974)	195 (1726)	5	
			8,5 (75)	25 (221)	65 (575)	135 (1195)	7	
			6 (53)	18 (159)	50 (443)	120 (1062)	8	
			5 (44)	15 (133)	38 (336)	95 (841)	10	
			16,5 (146)	44 (389)	130 (1151)	210 (1859)	9	2
			20 (177)	44 (389)	120 (1062)	260 (2301)	12	
			18 (159)	44 (389)	110 (974)	230 (2036)	15	
			20 (177)	44 (389)	120 (1062)	260 (2301)	16	
			20 (177)	44 (389)	120 (1062)	260 (2301)	20	
			18 (159)	40 (354)	110 (974)	230 (2036)	25	
			20 (177)	44 (389)	120 (1062)	260 (2301)	32	
			18 (159)	40 (354)	110 (974)	230 (2036)	40	
			7,5 (66)	18 (159)	50 (443)	120 (1062)	64	
			20 (177)	44 (389)	110 (974)	260 (2301)	60	3
			20 (177)	44 (389)	120 (1062)	260 (2301)	80	
			20 (177)	44 (389)	120 (1062)	260 (2301)	100	
			18 (159)	44 (389)	110 (974)	230 (2036)	120	
			20 (177)	44 (389)	120 (1062)	260 (2301)	160	
			18 (159)	40 (354)	110 (974)	230 (2036)	200	
			20 (177)	44 (389)	120 (1062)	260 (2301)	256	
			18 (159)	40 (354)	110 (974)	230 (2036)	320	
			7.5 (66)	18 (159)	50 (443)	120 (1062)	512	
Max. output torque[4][5]	T_{2max}	Nm (lb_f.in)	17.5 (155)	45 (398)	136 (1204)	184 (1629)	3	1
			24 (212)	61 (540)	184 (1629)	248 (2195)	4	
			22 (195)	64 (566)	176 (1558)	312 (2761)	5	
			13.5 (119)	40 (354)	104 (920)	216 (1912)	7	
			10 (89)	29 (257)	80 (708)	192 (1699)	8	
			8 (71)	24 (212)	61 (540)	152 (1345)	10	
			26 (230)	70 (620)	208 (1841)	336 (2974)	9	2
			32 (283)	70 (620)	192 (1699)	416 (3682)	12	
			29 (257)	70 (620)	176 (1558)	368 (3257)	15	
			32 (283)	70 (620)	192 (1699)	416 (3682)	16	
			32 (283)	70 (620)	192 (1699)	416 (3682)	20	
			29 (257)	64 (566)	176 (1558)	368 (3257)	25	
			32 (283)	70 (620)	192 (1699)	416 (3682)	32	
			29 (257)	64 (566)	176 (1558)	368 (3257)	40	
			12 (106)	29 (257)	80 (708)	192 (1699)	64	
			32 (283)	70 (620)	176 (1558)	416 (3682)	60	3
			32 (283)	70 (620)	192 (1699)	416 (3682)	80	
			32 (283)	70 (620)	192 (1699)	416 (3682)	100	
			29 (257)	70 (620)	176 (1558)	368 (3257)	120	
			32 (283)	70 (620)	192 (1699)	416 (3682)	160	
			29 (257)	64 (566)	176 (1558)	368 (3257)	200	
			32 (283)	70 (620)	192 (1699)	416 (3682)	256	
			29 (257)	64 (566)	176 (1558)	368 (3257)	320	
			12 (106)	29 (257)	80 (708)	192 (1699)	512	

(1) Ratios ($i=n_1/n_2$)
(2) Number of stages
(3) Application specific configuration with NCP – www.neugart.com
(4) Values for feather key (code "A"): for repeated load
(5) 30,000 rotations of the output shaft permitted; see page 166

Output torques			PLQE040	PLQE060	PLQE080	PLQE120	i[1]	p[2]
Emergency stop torque[3]	T_{2Stop}	Nm (lb_f.in)	22.5 (199)	66 (584)	180 (1593)	390 (3452)	3	1
			30 (266)	88 (779)	240 (2124)	520 (4602)	4	
			36 (319)	80 (708)	220 (1947)	500 (4425)	5	
			26 (230)	80 (708)	178 (1575)	340 (3009)	7	
			27 (239)	80 (708)	190 (1682)	380 (3363)	8	
			27 (239)	80 (708)	200 (1770)	480 (4248)	10	
			33 (292)	88 (779)	260 (2301)	500 (4425)	9	2
			40 (354)	88 (779)	240 (2124)	520 (4602)	12	
			36 (319)	88 (779)	220 (1947)	500 (4425)	15	
			40 (354)	88 (779)	240 (2124)	520 (4602)	16	
			40 (354)	88 (779)	240 (2124)	520 (4602)	20	
			36 (319)	80 (708)	220 (1947)	500 (4425)	25	
			40 (354)	88 (779)	240 (2124)	520 (4602)	32	
			36 (319)	80 (708)	220 (1947)	500 (4425)	40	
			27 (239)	80 (708)	190 (1682)	380 (3363)	64	
			40 (354)	88 (779)	220 (1947)	520 (4602)	60	3
			40 (354)	88 (779)	240 (2124)	520 (4602)	80	
			40 (354)	88 (779)	240 (2124)	520 (4602)	100	
			36 (319)	88 (779)	220 (1947)	500 (4425)	120	
			40 (354)	88 (779)	240 (2124)	520 (4602)	160	
			36 (319)	80 (708)	220 (1947)	500 (4425)	200	
			40 (354)	88 (779)	240 (2124)	520 (4602)	256	
			36 (319)	80 (708)	220 (1947)	500 (4425)	320	
			27 (239)	80 (708)	190 (1682)	380 (3363)	512	

Input speeds			PLQE040	PLQE060	PLQE080	PLQE120	i[1]	p[2]
Average thermal input speed at T_{2N} and S1[4][5]	n_{1N}	rpm	5000	4500[6]	3400[6]	3400[6]	3	1
			5000	4500[6]	3450[6]	3500[6]	4	
			5000	4500	4000[6]	3500[6]	5	
			5000	4500	4000	3500	7	
			5000	4500	4000	3500	8	
			5000	4500	4000	3500	10	
			5000	4500	4000[6]	3500[6]	9	2
			5000	4500	4000[6]	3500[6]	12	
			5000	4500	4000	3500[6]	15	
			5000	4500	4000	3500[6]	16	
			5000	4500	4000	3500	20	
			5000	4500	4000	3500	25	
			5000	4500	4000	3500	32	
			5000	4500	4000	3500	40	
			5000	4500	4000	3500	64	
			5000	4500	4000	3500	60	3
			5000	4500	4000	3500	80	
			5000	4500	4000	3500	100	
			5000	4500	4000	3500	120	
			5000	4500	4000	3500	160	
			5000	4500	4000	3500	200	
			5000	4500	4000	3500	256	
			5000	4500	4000	3500	320	
			5000	4500	4000	3500	512	
Max. mechanical input speed[4]	n_{1Limit}	rpm	18,000	13,000	7000	6500		

[1] Ratios ($i=n_1/n_2$)
[2] Number of stages
[3] Permitted 1000 times
[4] Application-specific speed configurations with NCP – www.neugart.com
[5] See page 166 for the definition
[6] Average thermal input speed at 50% T_{2N} and S1

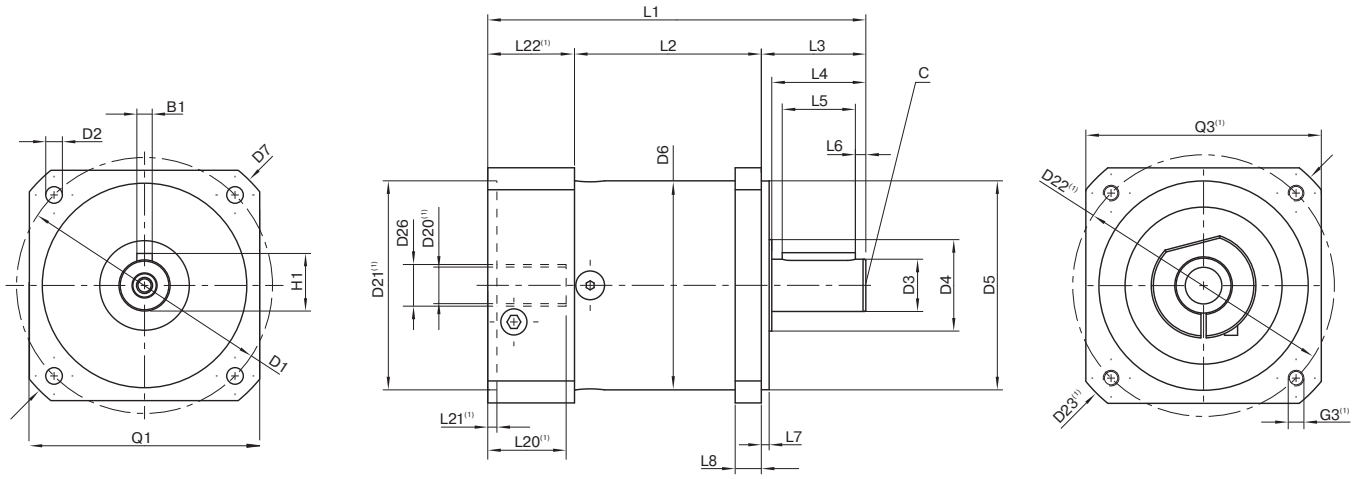

Drawing corresponds to a PLQE080 / 1-stage / output shaft with feather key / 19 mm clamping system / motor adaptation – one part / B5 flange type motor

(1) The dimensions vary with the motor/gearbox flange. The input flange dimensions can be retrieved for each specific motor in Tec Data Finder at www.neugart.com

Geometry(2)			**PLQE040**	**PLQE060**	**PLQE080**	**PLQE120**	**p**(3)	**Code**
Pitch circle diameter output	D1		50 (1.969)	75 (2.953)	100 (3.937)	130 (5.118)		
Mounting bore output	D2	4x	3.4 (0.134)	5.5 (0.217)	6.5 (0.256)	8.5 (0.335)		
Shaft diameter output	D3	h7	13 (0.512)	16 (0.630)	20 (0.787)	25 (0.984)		
Shaft collar output	D4		17 (0.669)	20 (0.787)	35 (1.378)	35 (1.378)		
Centering diameter output	D5	h7	35 (1.378)	60 (2.362)	80 (3.150)	110 (4.331)		
Housing diameter	D6		40 (1.575)	60 (2.362)	80 (3.150)	115 (4.528)		
Diagonal dimension output	D7		57 (2.244)	92 (3.622)	116 (4.567)	145 (5.709)		
Flange cross section output	Q1	■	42 (1.654)	70 (2.756)	90 (3.543)	115 (4.528)		
Min. total length	L1		90 (3.543)	111 (4.370)	145 (5.709)	201.5 (7.933)	1	
			103 (4.055)	123.5 (4.862)	162.5 (6.398)	229.5 (9.035)	2	
			115.5 (4.547)	136 (5.354)	180 (7.087)	257 (10.118)	3	
Housing length	L2		35.5 (1.398)	55 (2.165)	71 (2.795)	99 (3.898)	1	
			48.5 (1.909)	67.5 (2.657)	89 (3.504)	127 (5.000)	2	
			61 (2.402)	80.5 (3.169)	106.5 (4.193)	154.5 (6.083)	3	
Shaft length output	L3		26 (1.024)	32 (1.260)	40 (1.575)	55 (2.165)		
Centering depth output	L7		5.5 (0.217)	3 (0.118)	3 (0.118)	4 (0.157)		
Flange thickness output	L8		7 (0.256)	10 (0.394)	10 (0.394)	15 (0.591)		
Motor shaft diameter j6/k6	D20		More information on page 163/164					
Clamping system diameter input	D26							
Output shaft with feather key (DIN 6885-1)			A 5x5x14	A 5x5x20	A 6x6x28	A 8x7x40		A
Feather key width (DIN 6885-1)	B1		5 (0.197)	5 (0.197)	6 (0.236)	8 (0.315)		
Shaft height including feather key (DIN 6885-1)	H1		15 (0.591)	18 (0.709)	22.5 (0.886)	28 (1.102)		
Shaft length from shoulder	L4		18 (0.709)	28 (1.102)	36 (1.417)	50 (1.969)		
Feather key length	L5		14 (0.551)	20 (0.787)	28 (1.102)	40 (1.575)		
Distance from shaft end	L6		2 (0.079)	4 (0.157)	4 (0.157)	5 (0.197)		
Center hole (DIN 332. type DR)	C		M4x10	M5x12.5	M6x16	M10x22		
Smooth output shaft								B
Shaft length from shoulder	L4		18 (0.709)	28 (1.102)	36 (1.417)	50 (1.969)		

(2) Dimensions in mm
(3) Number of stages

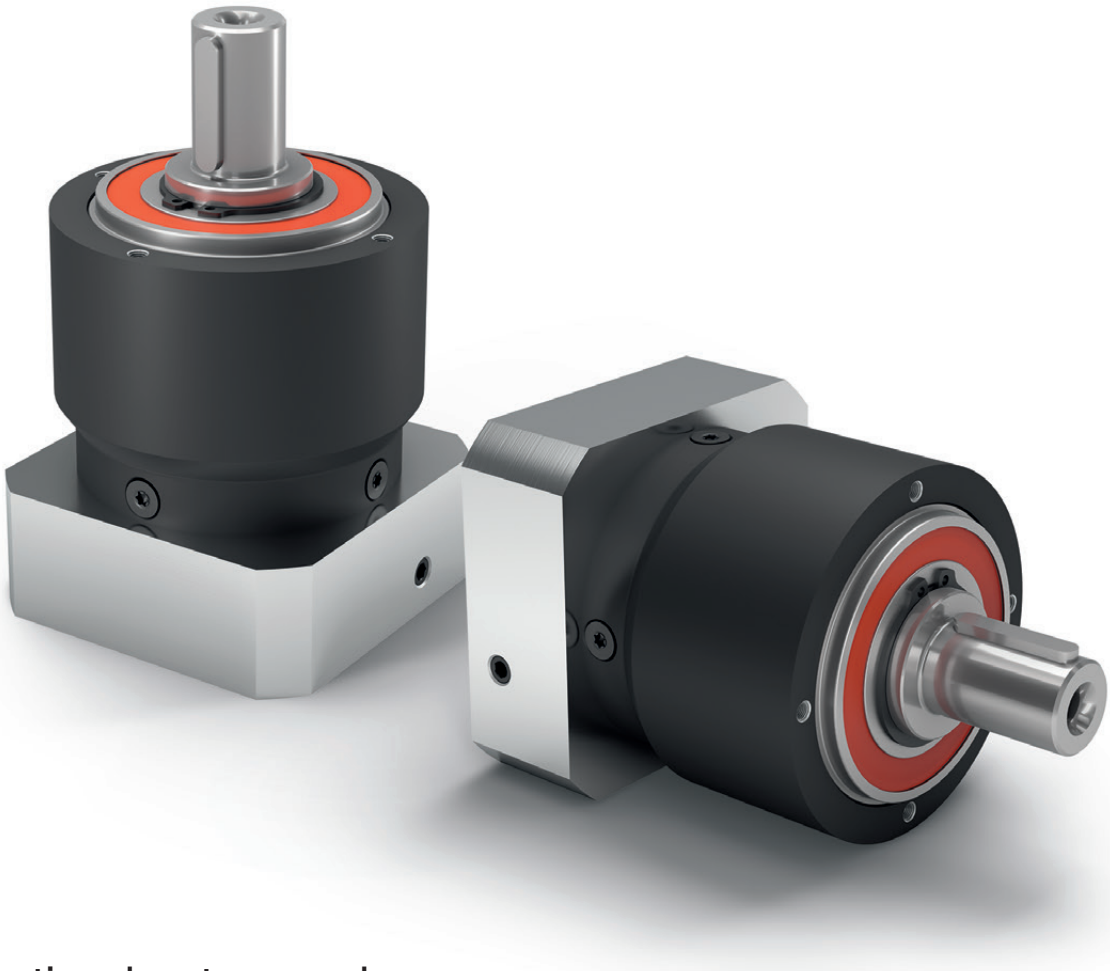

PLPE

The cost effective planetary gearbox with the best torque-low heat performance

Our **PLPE** combines the best features of the Economy series with a performance bonus: The optimized output bearing is designed for higher radial and axial forces. The compact outer contour of the PLPE also allows it to be used in limited spaces.

Nominal output torque	**5 - 460 Nm**
Radial force	**800 - 5200 N**
Axial force	**1000 - 7000 N**
Torsional backlash	**7 - 19 arcmin**
Protection class	**IP54**

Frame sizes

50 **70** **90** **120** **155**

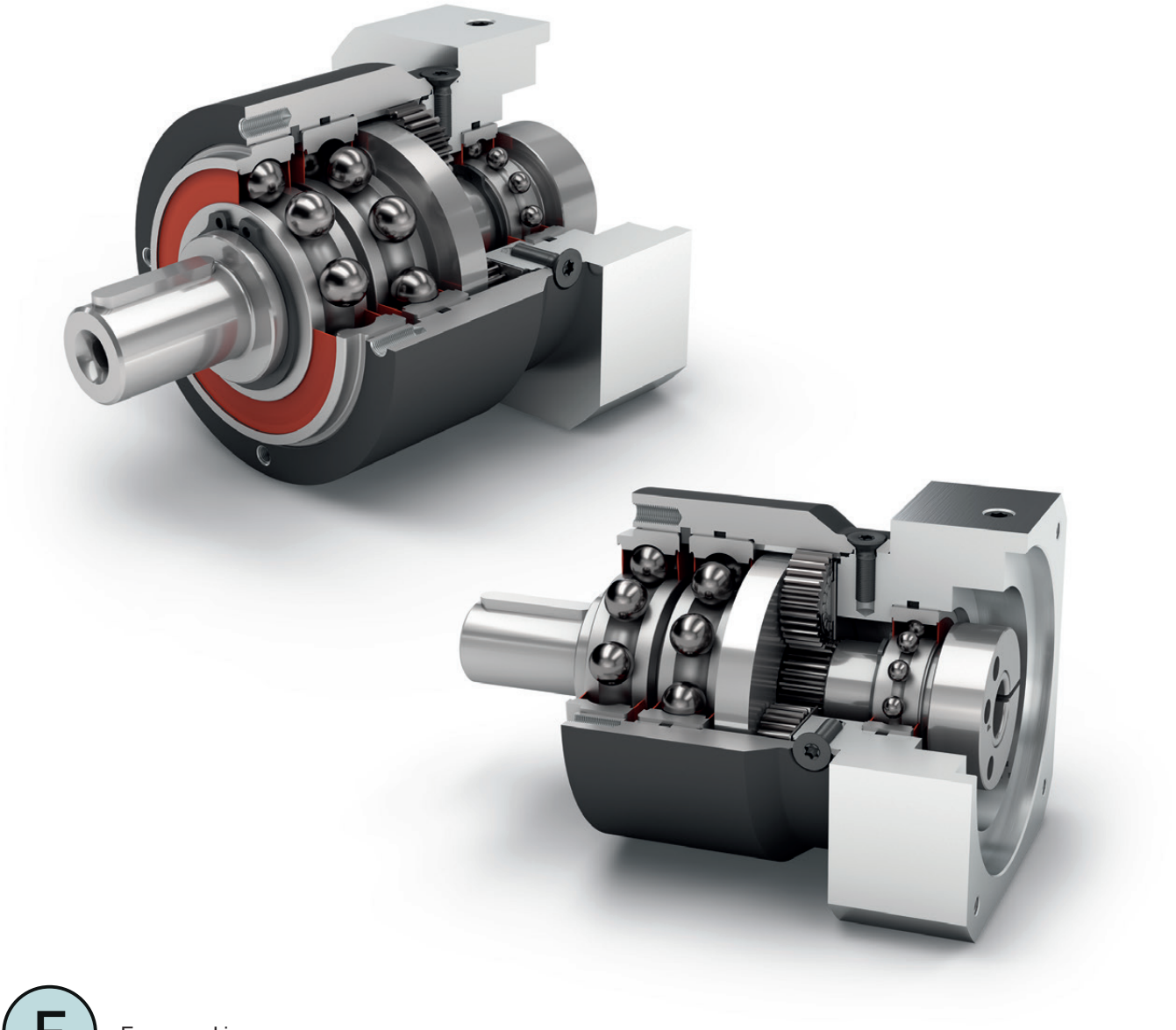

Economy Line

Coaxial gearbox

Spur gear

Reinforced deep groove ball bearings

Equidirectional rotation

Round type output flange

Planet carrier in disc design

Detailed explanations of the technical features starting on page 173.

Code	Gearbox characteristics			PLPE050	PLPE070	PLPE090	PLPE120	PLPE155	p(1)
	Service life (L_{10h})	t_L	h	30,000					
	Efficiency at full load(2)	η	%	98					1
				97					2
	Min. operating temperature	T_{min}	°C (°F)	-25 (-13)					
	Max. operating temperature	T_{max}		90 (194)					
	Protection class			IP54					
S	Standard lubrication			Grease (lifetime lubrication)					
F	Food grade lubrication			Grease (lifetime lubrication)					
L	Low temperature lubrication(3)			Grease (lifetime lubrication)					
	Installation position			Any					
S	Standard backlash	j_t	arcmin	< 15	< 10	< 7	< 7	< 6	1
				< 19	< 12	< 9	< 9	< 9	2
	Torsional stiffness(2)	c_g	Nm /arcmin (lb_f.in/ arcmin)	0.7 - 1.0 (6 - 9)	3.5 - 5.6 (31 - 50)	9.7 - 15.0 (86 - 133)	24.5 - 39.5 (217 - 350)	54.5 - 71.0 (482 - 628)	1
				0.7 - 1.1 (6 - 9)	3.3 - 5.8 (29 - 51)	9.7 - 16.1 (86 - 142)	21.0 - 43.5 (186 - 385)	55.0 - 73.0 (487 - 646)	2
	Gearbox weight(2)	m_G	kg (lb_m)	0.6 (1.3)	1.4 (3.1)	3.2 - 3.3 (7.1 - 7.3)	7.4 - 7.5 (16.3 - 16.6)	16.8 (37.0)	1
				0.8 - 1.1 (1.7 - 2.4)	1.7 - 1.9 (3.7 - 4.1)	3.9 - 4.0 (8.6 - 8.9)	9.3 - 9.6 (20.6 - 21.3)	22.1 - 22.5 (48.8 - 49.6)	2
S	Standard surface			Housing: Steel – heat-treated and post-oxidized (black)					
	Running noise(4)	Q_g	dB(A)	58	58	60	65	70	
	Max. bending moment based on the gearbox input flange(5)	M_b	Nm (lb_f.in)	4,5 (40)	12 (106)	16 (142)	40 (354)	180 (1593)	

Output shaft loads			PLPE050	PLPE070	PLPE090	PLPE120	PLPE155	p(1)
Radial force for 20,000 h(6)(7)	$F_{r\,20.000\,h}$	N (lb_f)	800 (180)	1050 (236)	1900 (427)	2500 (562)	5200 (1169)	
Axial force for 20,000 h(6)(7)	$F_{a\,20.000\,h}$		1000 (225)	1350 (303)	2000 (450)	4000 (899)	7000 (1574)	
Radial force for 30,000 h(6)(7)	$F_{r\,30.000\,h}$		700 (157)	900 (202)	1700 (382)	2150 (483)	4600 (1034)	
Axial force for 30,000 h(6)(7)	$F_{a\,30.000\,h}$		800 (180)	1000 (225)	1500 (337)	3000 (674)	6000 (1349)	
Maximum radial force(7)(8)	$F_{r\,Stat}$		1300 (292)	1650 (371)	3100 (697)	4000 (899)	8400 (1888)	
Maximum axial force(7)(8)	$F_{a\,Stat}$		1000 (225)	2100 (472)	3800 (854)	5900 (1326)	11000 (2473)	
Tilting moment for 20,000 h(6)(8)	$M_{K\,20.000\,h}$	Nm (lb_f.in)	26 (230)	42 (372)	99 (876)	168 (1487)	497 (4399)	
Tilting moment for 30,000 h(6)(8)	$M_{K\,30.000\,h}$		22 (195)	36 (319)	89 (788)	144 (1275)	440 (3894)	

Moment of inertia			PLPE050	PLPE070	PLPE090	PLPE120	PLPE155	p(1)
Mass moment of inertia(2)	J	kgcm² (lb_f.in.s²10⁻⁴)	0.015 - 0.030 (0.133 - 0.266)	0.069 - 0.174 (0.611 - 1.540)	0.374 - 0.789 (3.310 - 6.983)	1.419 - 2.764 (12.559 - 24.463)	4.932 - 7.611 (43.652 - 67.363)	1
			0.014 - 0.026 (0.124 - 0.230)	0.064 - 0.126 (0.566 - 1.115)	0.356 - 0.625 (3.151 - 5.532)	1.376 - 2.334 (12.179 - 20.658)	4.759 - 7.108 (42.121 - 62.911)	2

(1) Number of stages
(2) The ratio-dependent values can be retrieved in Tec Data Finder – www.neugart.com
(3) T_{min} = -40°C. Optimal operating temperature max. 50°C
(4) Sound pressure level from 1 m, measured on input running at n_1=3000 rpm no load; i=5
(5) Max. motor weight* in kg = 0.2 x M_b / motor length in m
* with symmetrically distributed motor weight
* with horizontal and stationary mounting
(6) These values are based on an output shaft speed of n_2=100 rpm
(7) Based on center of output shaft
(8) Other (sometimes higher) values following changes to T_{2N}, F_r, F_a, cycle, and service life of bearing. Application specific configuration with NCP – www.neugart.com

Output torques			PLPE050	PLPE070	PLPE090	PLPE120	PLPE155	i(1)	p(2)
Nominal output torque(3)(4)	T_{2N}	Nm (lb_f.in)	11 (97)	28 (248)	85 (752)	115 (1018)	-	3	1
			15 (133)	33 (292)	90 (797)	155 (1372)	460 (4071)	4	
			13 (115)	30 (266)	82 (726)	172 (1522)	445 (3939)	5	
			8,5 (75)	25 (221)	65 (575)	135 (1195)	-	7	
			6 (53)	18 (159)	50 (443)	120 (1062)	-	8	
			5 (44)	15 (133)	38 (336)	95 (841)	210 (1859)	10	
			12 (106)	33 (292)	97 (859)	157 (1390)	-	9	2
			15 (133)	33 (292)	90 (797)	195 (1726)	-	12	
			13 (115)	33 (292)	82 (726)	172 (1522)	-	15	
			15 (133)	33 (292)	90 (797)	195 (1726)	460 (4071)	16	
			15 (133)	33 (292)	90 (797)	195 (1726)	460 (4071)	20	
			13 (115)	30 (266)	82 (726)	172 (1522)	445 (3939)	25	
			15 (133)	33 (292)	90 (797)	195 (1726)	-	32	
			13 (115)	30 (266)	82 (726)	172 (1522)	460 (4071)	40	
			-	-	-	-	445 (3939)	50	
			7,5 (66)	18 (159)	50 (443)	120 (1062)	-	64	
			5 (44)	15 (133)	38 (336)	95 (841)	210 (1859)	100	
Max. output torque(4)(5)	T_{2max}	Nm (lb_f.in)	17,5 (155)	45 (398)	136 (1204)	184 (1629)	-	3	1
			24 (212)	53 (469)	144 (1275)	248 (2195)	736 (6514)	4	
			21 (186)	48 (425)	131 (1159)	275 (2434)	712 (6302)	5	
			13,5 (119)	40 (354)	104 (920)	216 (1912)	-	7	
			9,5 (84)	29 (257)	80 (708)	192 (1699)	-	8	
			8 (71)	24 (212)	61 (540)	152 (1345)	336 (2974)	10	
			19 (168)	53 (469)	155 (1372)	251 (2222)	-	9	2
			24 (212)	53 (469)	144 (1275)	312 (2761)	-	12	
			21 (186)	53 (469)	131 (1159)	275 (2434)	-	15	
			24 (212)	53 (469)	144 (1275)	312 (2761)	736 (6514)	16	
			24 (212)	53 (469)	144 (1275)	312 (2761)	736 (6514)	20	
			21 (186)	48 (425)	131 (1159)	275 (2434)	712 (6302)	25	
			24 (212)	53 (469)	144 (1275)	312 (2761)	-	32	
			21 (186)	48 (425)	131 (1159)	275 (2434)	736 (6514)	40	
			-	-	-	-	712 (6302)	50	
			12 (106)	29 (257)	80 (708)	192 (1699)	-	64	
			8 (71)	24 (212)	61 (540)	152 (1345)	336 (2974)	100	

(1) Ratios ($i=n_1/n_2$)
(2) Number of stages
(3) Application specific configuration with NCP – www.neugart.com
(4) Values for feather key (code "A"): for repeated load
(5) 30,000 rotations of the output shaft permitted; see page 166

Output torques			PLPE050	PLPE070	PLPE090	PLPE120	PLPE155	i(1)	p(2)
Emergency stop torque(3)	T_{2Stop}	Nm (lb_f.in)	22,5 (199)	66 (584)	180 (1593)	390 (3452)	-	3	1
			30 (266)	88 (779)	240 (2124)	520 (4602)	920 (8143)	4	
			36 (319)	80 (708)	220 (1947)	500 (4425)	890 (7877)	5	
			26 (230)	80 (708)	178 (1575)	340 (3009)	-	7	
			27 (239)	80 (708)	190 (1682)	380 (3363)	-	8	
			27 (239)	80 (708)	200 (1770)	480 (4248)	420 (3717)	10	
			33 (292)	88 (779)	260 (2301)	500 (4425)	-	9	2
			40 (354)	88 (779)	240 (2124)	520 (4602)	-	12	
			36 (319)	88 (779)	220 (1947)	500 (4425)	-	15	
			40 (354)	88 (779)	240 (2124)	520 (4602)	920 (8143)	16	
			40 (354)	88 (779)	240 (2124)	520 (4602)	920 (8143)	20	
			36 (319)	80 (708)	220 (1947)	500 (4425)	890 (7877)	25	
			40 (354)	88 (779)	240 (2124)	520 (4602)	-	32	
			36 (319)	80 (708)	220 (1947)	500 (4425)	920 (8143)	40	
			-	-	-	-	890 (7877)	50	
			27 (239)	80 (708)	190 (1682)	380 (3363)	-	64	
			27 (239)	80 (708)	200 (1770)	480 (4248)	420 (3717)	100	

Input speeds			PLPE050	PLPE070	PLPE090	PLPE120	PLPE155	i(1)	p(2)
Average thermal input speed at T_{2N} and S1(4)(5)	n_{1N}	rpm	5000	4500(6)	3250(6)	2650(6)	-	3	1
			5000	4500(6)	3750(6)	2800(6)	1800(6)	4	
			5000	4500	4000(6)	3100(6)	2150(6)	5	
			5000	4500	4000	3500(6)	-	7	
			5000	4500	4000	3500	-	8	
			5000	4500	4000	3500	3000	10	
			5000	4500	4000(6)	3500(6)	-	9	2
			5000	4500	4000	3500(6)	-	12	
			5000	4500	4000	3500(6)	-	15	
			5000	4500	4000	3500(6)	2900(6)	16	
			5000	4500	4000	3500	3000(6)	20	
			5000	4500	4000	3500	3000(6)	25	
			5000	4500	4000	3500	-	32	
			5000	4500	4000	3500	3000	40	
			-	-	-	-	3000	50	
			5000	4500	4000	3500	-	64	
			5000	4500	4000	3500	3000	100	
Max. mechanical input speed(4)	n_{1Limit}	rpm	18,000	13,000	7000	6500	5500		

(1) Ratios ($i=n_1/n_2$)
(2) Number of stages
(3) Permitted 1000 times
(4) Application-specific speed configurations with NCP – www.neugart.com
(5) See page 166 for the definition
(6) Average thermal input speed at 50% T_{2N} and S1

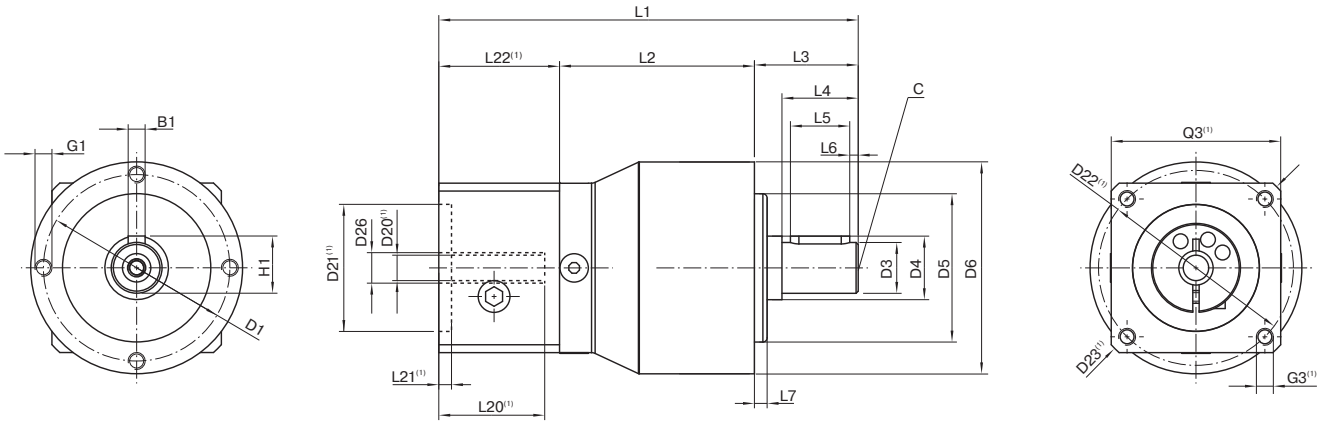

Drawing corresponds to a PLPE050 / 1-stage / output shaft with feather key / 8 mm clamping system / motor adaptation – one part / B5 flange type motor

(1) The dimensions vary with the motor/gearbox flange. The input flange dimensions can be retrieved for each specific motor in Tec Data Finder at www.neugart.com

Geometry(2)			PLPE050	PLPE070	PLPE090	PLPE120	PLPE155	p(3)	Code
Pitch circle diameter output	D1		44 (1.732)	62 (2.441)	80 (3.150)	108 (4.252)	140 (5.512)		
Shaft diameter output	D3	k7	12 (0.472)	16 (0.630)	22 (0.866)	32 (1.260)	40 (1.575)		
Shaft collar output	D4		15 (0.591)	30 (1.181)	35 (1.378)	50 (1.969)	55 (2.165)		
Centering diameter output	D5	h7	35 (1.378)	52 (2.047)	68 (2.677)	90 (3.543)	120 (4.724)		
Housing diameter	D6		50 (1.969)	70 (2.756)	90 (3.543)	120 (4.724)	155 (6.102)		
Mounting thread x depth	G1	4x	M4x8	M5x8	M6x9	M8x20	M10x20		
Min. total length	L1		94 (3.701)	111 (4.370)	147 (5.787)	192 (7.559)	275.5 (10.846)	1	
			106.5 (4.193)	124 (4.882)	165 (6.496)	219.5 (8.642)	320 (12.598)	2	
Housing length	L2		46 (1.811)	51 (2.008)	67.5 (2.657)	76.5 (3.012)	100 (3.937)	1	
			58.5 (2.303)	64 (2.520)	85 (3.346)	104 (4.094)	144.5 (5.689)	2	
Shaft length output	L3		24.5 (0.965)	36 (1.417)	46 (1.811)	68 (2.677)	97 (3.819)		
Centering depth output	L7		3 (0.118)	3 (0.118)	4 (0.157)	5 (0.197)	8 (0.315)		
Motor shaft diameter j6/k6	D20		More information on page 163/164						
Clamping system diameter input	D26								
Output shaft with feather key (DIN 6885-1)			A 4x4x14	A 5x5x25	A 6x6x32	A 10x8x50	A 12x8x70		A
Feather key width (DIN 6885-1)	B1		4 (0.157)	5 (0.197)	6 (0.236)	10 (0.394)	12 (0.472)		
Shaft height including feather key (DIN 6885-1)	H1		13.5 (0.531)	18 (0.709)	24.5 (0.965)	35 (1.378)	43 (1.693)		
Shaft length from shoulder	L4		18 (0.709)	28 (1.102)	36 (1.417)	58 (2.283)	82 (3.228)		
Feather key length	L5		14 (0.551)	25 (0.984)	32 (1.260)	50 (1.969)	70 (2.756)		
Distance from shaft end	L6		2 (0.079)	2 (0.079)	2 (0.079)	4 (0.157)	6 (0.236)		
Center hole (DIN 332, type DR)	C		M4x10	M5x12.5	M8x19	M12x28	M16x36		
Smooth output shaft									B
Shaft length from shoulder	L4		18 (0.709)	28 (1.102)	36 (1.417)	58 (2.283)	82 (3.228)		

(2) Dimensions in mm
(3) Number of stages

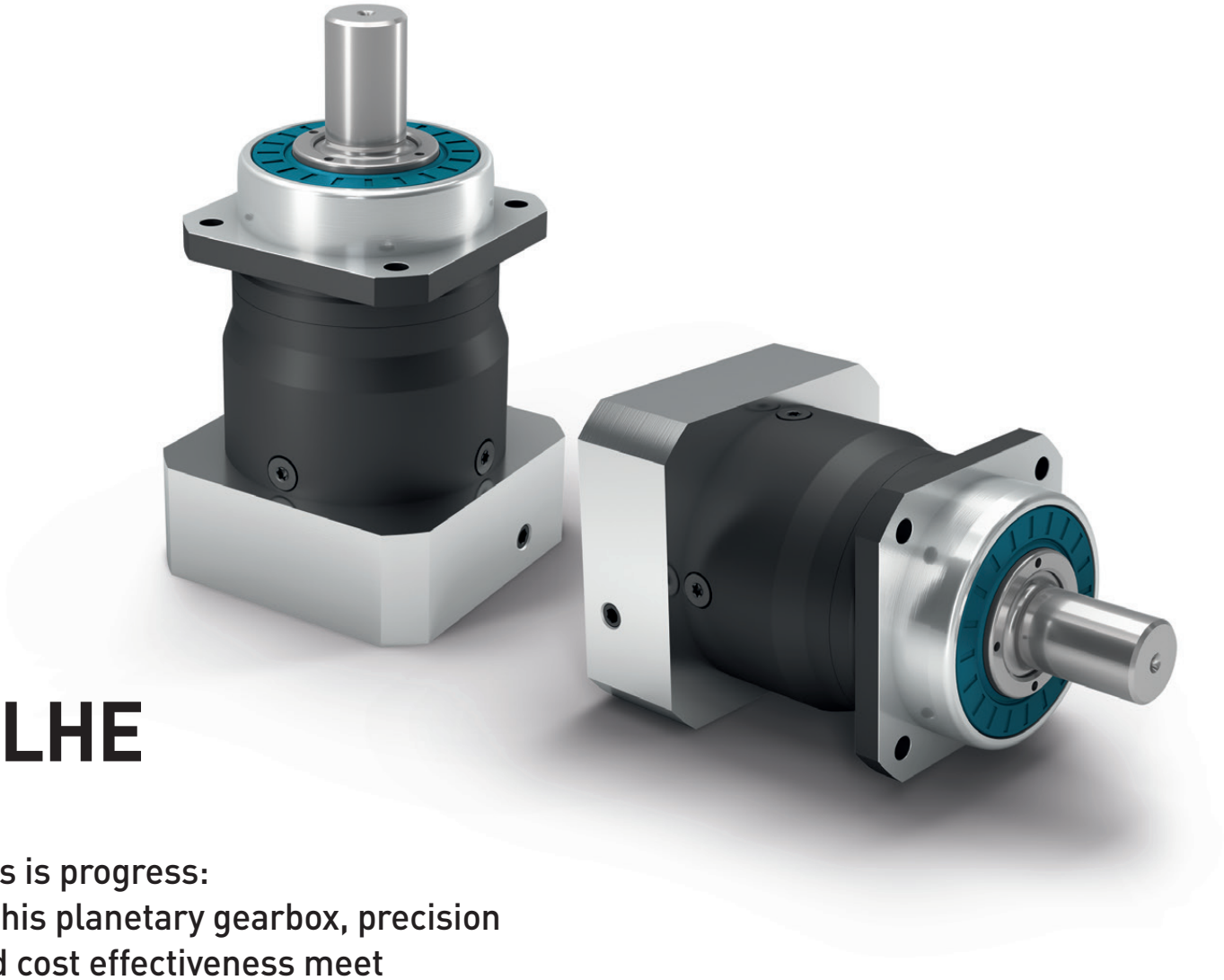

PLHE

This is progress:
In this planetary gearbox, precision and cost effectiveness meet

The **PLHE** is our ideal combination of economy and precision gearboxes. The preloaded tapered roller bearings of this planetary gearbox guarantee high rigidity even under maximum load. The high-performance seal provides increased protection against dust and water spray.

Nominal output torque	**15 - 260 Nm**
Radial force	**3200 - 6000 N**
Axial force	**4400 - 8000 N**
Torsional backlash	**7 - 12 arcmin**
Protection class	**IP65**

Frame sizes

60 **80** **120**

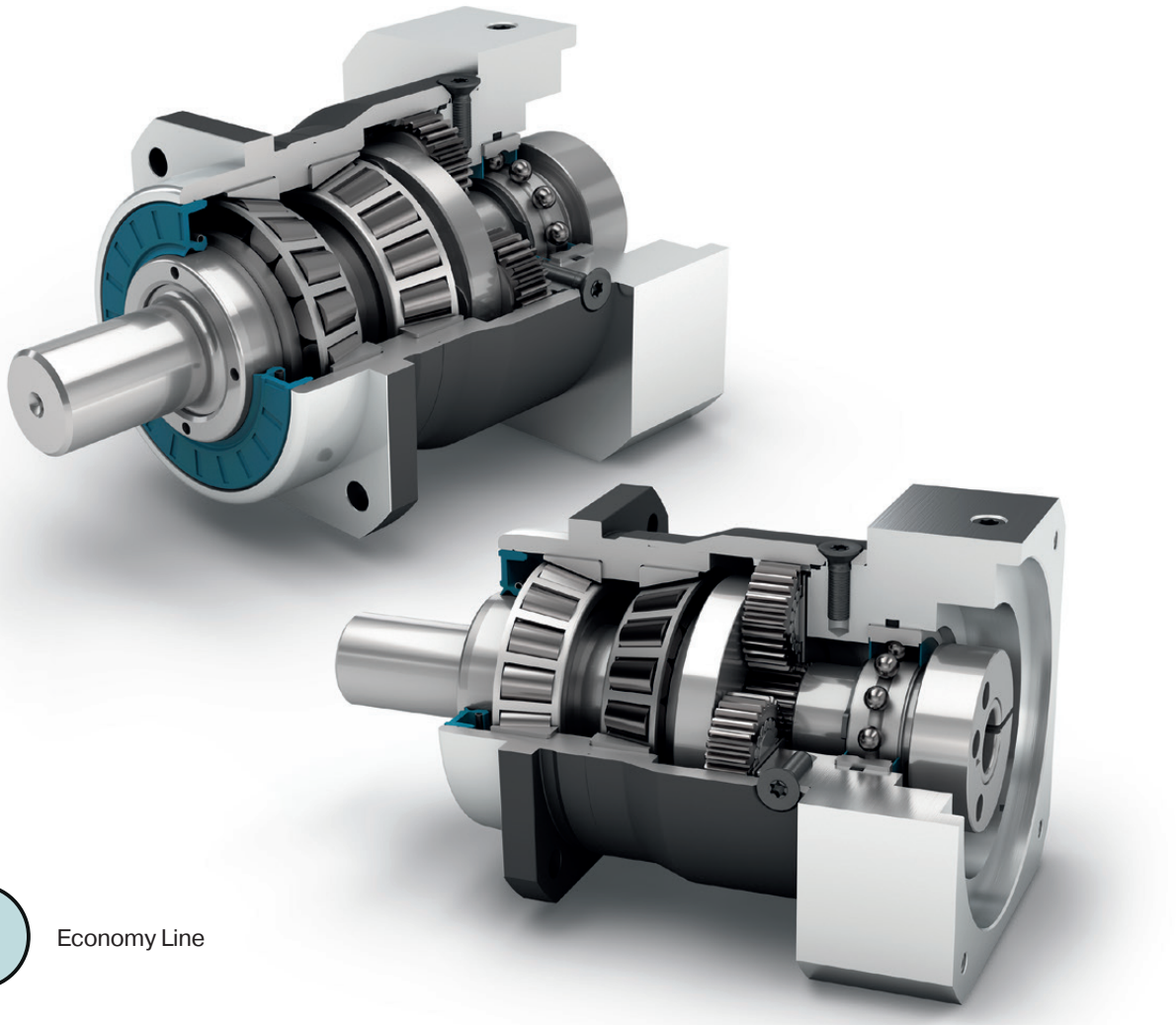

Economy Line

Coaxial gearbox

Spur gear

Preloaded tapered roller bearings

Extra long centering collar

Option: Splined output shaft (DIN 5480)

Equidirectional rotation

Square type output flange

Rotary shaft seal

Planet carrier in disc design

Option: Planetary gearbox with mounted pinion on page 132

Detailed explanations of the technical features starting on page 173.

Code	Gearbox characteristics			PLHE060	PLHE080	PLHE120	p(1)
	Service life (L_{10h})	t_L	h	30,000			
	Efficiency at full load(2)	η	%	97			1
				96			2
	Min. operating temperature	T_{min}	°C (°F)	-25 (-13)			
	Max. operating temperature	T_{max}		90 (194)			
	Protection class			IP65			
S	Standard lubrication			Grease (lifetime lubrication)			
F	Food grade lubrication			Grease (lifetime lubrication)			
L	Low temperature lubrication(3)			Grease (lifetime lubrication)			
	Installation position			Any			
S	Standard backlash	j_t	arcmin	< 10	< 7	< 7	1
				< 12	< 9	< 9	2
	Torsional stiffness(2)	c_g	Nm /arcmin (lb_f.in/ arcmin)	2.6 - 4.4 (23 - 39)	7.3 - 11.6 (65 - 103)	18.5 - 26.0 (164 - 230)	1
				2.5 - 4.6 (22 - 41)	7.3 - 12.3 (65 - 109)	16.7 - 27.5 (148 - 243)	2
	Gearbox weight(2)	m_G	kg (lb_m)	1.5 - 1.6 (3.3 - 3.5)	3.0 (6.6)	6.8 - 7.0 (15.1 - 15.4)	1
				1.7 - 1.8 (3.8 - 3.9)	3.5 - 4.0 (7.7 - 8.8)	8.5 - 8.8 (18.8 - 19.5)	2
S	Standard surface			Housing: Steel – heat-treated and post-oxidized (black)			
	Running noise(4)	Q_g	dB(A)	58	60	65	
	Max. bending moment based on the gearbox input flange(5)	M_b	Nm (lb_f.in)	8 (71)	16 (142)	40 (354)	

Output shaft loads			PLHE060	PLHE080	PLHE120	p(1)
Radial force for 20,000 h(6)(7)	$F_{r\,20.000\,h}$	N (lb_f)	3200 (719)	5500 (1236)	6000 (1349)	
Axial force for 20,000 h(6)(7)	$F_{a\,20.000\,h}$		4400 (989)	6400 (1439)	8000 (1798)	
Radial force for 30,000 h(6)(7)	$F_{r\,30.000\,h}$		3200 (719)	4800 (1079)	5400 (1214)	
Axial force for 30,000 h(6)(7)	$F_{a\,30.000\,h}$		3900 (877)	5700 (1281)	7000 (1574)	
Maximum radial force(7)(8)	$F_{r\,Stat}$		3200 (719)	5500 (1236)	6000 (1349)	
Maximum axial force(7)(8)	$F_{a\,Stat}$		4400 (989)	6400 (1439)	8000 (1798)	
Tilting moment for 20,000 h(6)(8)	$M_{K\,20.000\,h}$	Nm (lb_f.in)	191 (1690)	383 (3390)	488 (4319)	
Tilting moment for 30,000 h(6)(8)	$M_{K\,30.000\,h}$		191 (1690)	335 (2965)	439 (3885)	

Moment of inertia			PLHE060	PLHE080	PLHE120	p(1)
Mass moment of inertia(2)	J	kgcm² (lb_f.in.s²10⁻⁴)	0.069 - 0.178 (0.611 - 1.575)	0.370 - 0.775 (3.275 - 6.859)	1.390 - 2.486 (12.303 - 22.003)	1
			0.064 - 0.135 (0.566 - 1.195)	0.357 - 0.641 (3.160 - 5.673)	1.378 - 2.326 (12.196 - 20.587)	2

(1) Number of stages
(2) The ratio-dependent values can be retrieved in Tec Data Finder – www.neugart.com
(3) T_{min} = -40°C. Optimal operating temperature max. 50°C
(4) Sound pressure level from 1 m, measured on input running at n_1=3000 rpm no load; i=5
(5) Max. motor weight* in kg = 0.2 x M_b / motor length in m
* with symmetrically distributed motor weight
* with horizontal and stationary mounting
(6) These values are based on an output shaft speed of n_2=100 rpm
(7) Based on center of output shaft
(8) Other (sometimes higher) values following changes to T_{2N}, F_r, F_a, cycle, and service life of bearing. Application specific configuration with NCP – www.neugart.com

Output torques			PLHE060	PLHE080	PLHE120	i(1)	p(2)
Nominal output torque(3)(4)	T_{2N}	Nm (lb_f.in)	28 (248)	85 (752)	115 (1018)	3	1
			38 (336)	115 (1018)	155 (1372)	4	
			40 (354)	110 (974)	195 (1726)	5	
			25 (221)	65 (575)	135 (1195)	7	
			18 (159)	50 (443)	120 (1062)	8	
			15 (133)	38 (336)	95 (841)	10	
			44 (389)	130 (1151)	210 (1859)	9	2
			44 (389)	120 (1062)	260 (2301)	12	
			44 (389)	110 (974)	230 (2036)	15	
			44 (389)	120 (1062)	260 (2301)	16	
			44 (389)	120 (1062)	260 (2301)	20	
			40 (354)	110 (974)	230 (2036)	25	
			44 (389)	120 (1062)	260 (2301)	32	
			40 (354)	110 (974)	230 (2036)	40	
			18 (159)	50 (443)	120 (1062)	64	
			15 (133)	38 (336)	95 (841)	100	
Max. output torque(4)(5)	T_{2max}	Nm (lb_f.in)	45 (398)	136 (1204)	184 (1629)	3	1
			61 (540)	184 (1629)	248 (2195)	4	
			64 (566)	176 (1558)	312 (2761)	5	
			40 (354)	104 (920)	216 (1912)	7	
			29 (257)	80 (708)	192 (1699)	8	
			24 (212)	61 (540)	152 (1345)	10	
			70 (620)	208 (1841)	336 (2974)	9	2
			70 (620)	192 (1699)	416 (3682)	12	
			70 (620)	176 (1558)	368 (3257)	15	
			70 (620)	192 (1699)	416 (3682)	16	
			70 (620)	192 (1699)	416 (3682)	20	
			64 (566)	176 (1558)	368 (3257)	25	
			70 (620)	192 (1699)	416 (3682)	32	
			64 (566)	176 (1558)	368 (3257)	40	
			29 (257)	80 (708)	192 (1699)	64	
			24 (212)	61 (540)	152 (1345)	100	

(1) Ratios ($i=n_1/n_2$)
(2) Number of stages
(3) Application specific configuration with NCP – www.neugart.com
(4) Values for feather key (code "A"): for repeated load
(5) 30,000 rotations of the output shaft permitted; see page 166

Output torques			PLHE060	PLHE080	PLHE120	i[1]	p[2]
Emergency stop torque[3]	T_{2Stop}	Nm (lb_f.in)	66 (584)	180 (1593)	390 (3452)	3	1
			88 (779)	240 (2124)	520 (4602)	4	
			80 (708)	220 (1947)	500 (4425)	5	
			80 (708)	178 (1575)	340 (3009)	7	
			80 (708)	190 (1682)	380 (3363)	8	
			80 (708)	200 (1770)	480 (4248)	10	
			88 (779)	260 (2301)	500 (4425)	9	2
			88 (779)	240 (2124)	520 (4602)	12	
			88 (779)	220 (1947)	500 (4425)	15	
			88 (779)	240 (2124)	520 (4602)	16	
			88 (779)	240 (2124)	520 (4602)	20	
			80 (708)	220 (1947)	500 (4425)	25	
			88 (779)	240 (2124)	520 (4602)	32	
			80 (708)	220 (1947)	500 (4425)	40	
			80 (708)	190 (1682)	380 (3363)	64	
			80 (708)	200 (1770)	480 (4248)	100	

Input speeds			PLHE060	PLHE080	PLHE120	i[1]	p[2]
Average thermal input speed at T_{2N} and S1[4][5]	n_{1N}	rpm	2950[6]	2450[6]	2150[6]	3	1
			3500[6]	2700[6]	2400[6]	4	
			4200[6]	3250[6]	2600[6]	5	
			4500	4000	3500[6]	7	
			4500	4000	3500[6]	8	
			4500	4000	3500	10	
			4500[6]	4000[6]	3050[6]	9	2
			4500	4000[6]	3200[6]	12	
			4500	4000	3500[6]	15	
			4500	4000	3500[6]	16	
			4500	4000	3500[6]	20	
			4500	4000	3500	25	
			4500	4000	3500	32	
			4500	4000	3500	40	
			4500	4000	3500	64	
			4500	4000	3500	100	
Max. mechanical input speed[4]	n_{1Limit}	rpm	13,000	7000	6500		

[1] Ratios ($i=n_1/n_2$)
[2] Number of stages
[3] Permitted 1000 times
[4] Application-specific speed configurations with NCP – www.neugart.com
[5] See page 166 for the definition
[6] Average thermal input speed at 50% T_{2N} and S1

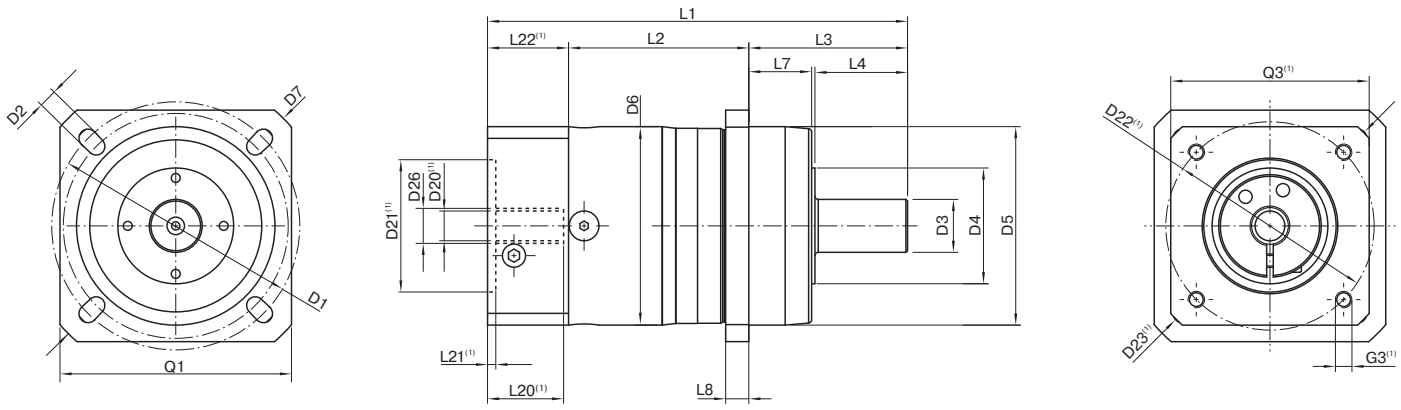

Drawing corresponds to a PLHE060 / 1-stage / smooth output shaft / 11 mm clamping system / motor adaptation – one part / B5 flange type motor

(1) The dimensions vary with the motor/gearbox flange. The input flange dimensions can be retrieved for each specific motor in Tec Data Finder at www.neugart.com

Geometry(2)			PLHE060	PLHE080	PLHE120	p(3)	Code
Pitch circle diameter output	D1		68 - 75 (2.677 - 2.953)	85 (3.346)	120 (4.724)		
Mounting bore output	D2	4x	5.5 (0.217)	6.5 (0.256)	9.0 (0.354)		
Shaft diameter output	D3	k6	16 (0.630)	22 (0.866)	32 (1.260)		
Shaft collar output	D4		35 (1.378)	40 (1.575)	45 (1.772)		
Centering diameter output	D5	g7	60 (2.362)	70 (2.756)	90 (3.543)		
Housing diameter	D6		60 (2.362)	80 (3.150)	115 (4.528)		
Diagonal dimension output	D7		92 (3.622)	100 (3.937)	140 (5.512)		
Flange cross section output	Q1	■	70 (2.756)	80 (3.150)	110 (4.331)		
Min. total length	L1		127 (5.000)	159 (6.260)	199.5 (7.854)	1	
			139.5 (5.492)	177 (6.969)	227 (8.937)	2	
Housing length	L2		55 (2.165)	69.5 (2.736)	64 (2.520)	1	
			67.5 (2.657)	87 (3.445)	91.5 (3.602)	2	
Shaft length output	L3		48 (1.890)	56 (2.205)	88 (3.465)		
Centering depth output	L7		19 (0.748)	17.5 (0.689)	28 (1.102)		
Flange thickness output	L8		7 (0.276)	8 (0.315)	10 (0.394)		
Motor shaft diameter j6/k6	D20		More information on page 163/164				
Clamping system diameter input	D26						
Output shaft with feather key (DIN 6885-1)			A 5x5x25	A 6x6x28	A 10x8x50		
Feather key width (DIN 6885-1)	B1		5 (0.197)	6 (0.236)	10 (0.394)		
Shaft height including feather key (DIN 6885-1)	H1		18 (0.709)	24.5 (0.965)	35 (1.378)		A
Shaft length from shoulder	L4		28 (1.102)	36 (1.417)	58 (2.283)		
Feather key length	L5		25 (0.984)	28 (1.102)	50 (1.969)		
Distance from shaft end	L6		2 (0.079)	4 (0.157)	4 (0.157)		
Center hole (DIN 332. type DR)	C		M5x12.5	M8x19	M12x28		
Smooth output shaft							B
Shaft length from shoulder	L4		28 (1.102)	36 (1.417)	58 (2.283)		
Splined output shaft (DIN 5480)			W16x0,8x18x6m	W22x1,25x16x6m	W32x1,25x24x6m		
Width of gearing	L_v		15 (0.591)	15 (0.591)	15 (0.591)		C
Shaft length output	L3		48 (1.890)	56 (2.205)	88 (3.465)		
Shaft length from shoulder	L4		26 (1.024)	26 (1.024)	26 (1.024)		
Center hole (DIN 332. type DR)	C		M5x12,5	M8x19	M12x28		

(2) Dimensions in mm
(3) Number of stages

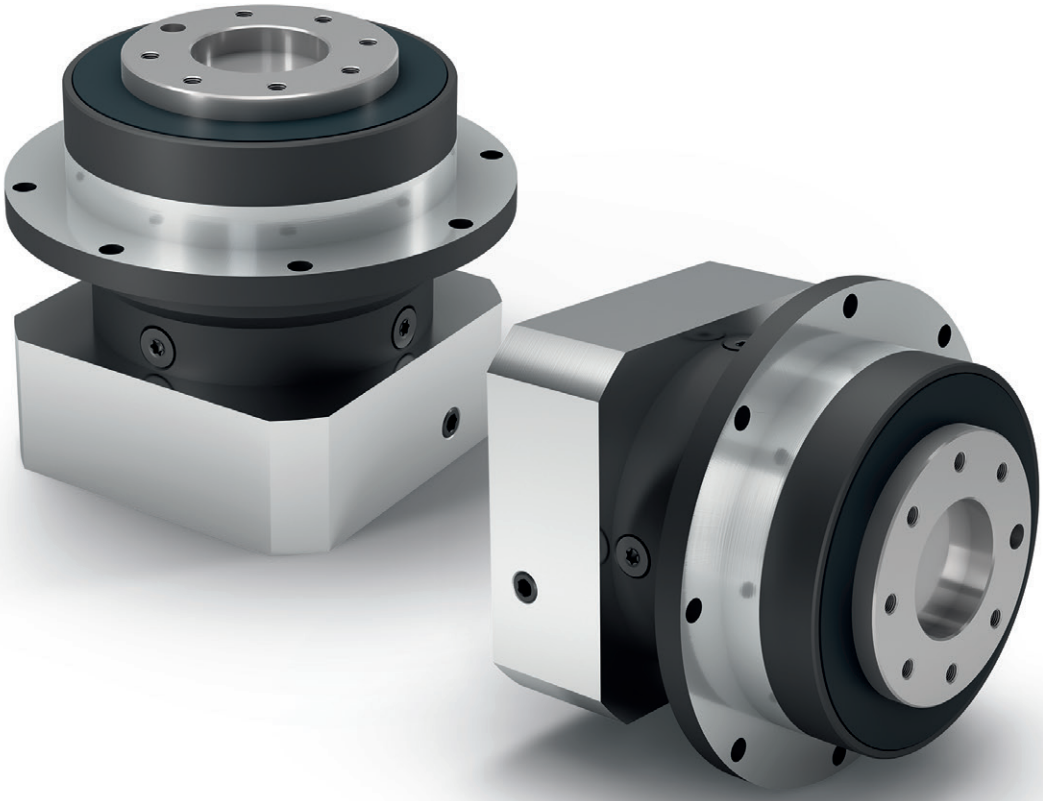

PLFE

The shortest planetary gearbox with high torsional stiffness and flange output shaft

There is no such thing as too short: The **PLFE** is our planetary gearbox with compact flange output shaft. They are more than one-third smaller in size. Its standardized flange interface makes it particularly easy to install. The integrated dowel pin drill hole provides additional stability during installation.

Nominal output torque	**5 - 260 Nm**
Radial force	**550 - 2400 N**
Axial force	**480 - 3300 N**
Torsional backlash	**7 - 15 arcmin**
Protection class	**IP54**

Frame sizes

55 **64** **90** **110**



Economy Line

Coaxial gearbox

Equidirectional rotation

Spur gear

Extra large round type output flange

Low-friction deep groove ball bearings

Flange output shaft (ISO 9409-1)

Planet carrier in disc design

Detailed explanations of the technical features starting on page 173.

Code	Gearbox characteristics			PLFE055	PLFE064	PLFE090	PLFE110	p[1]
	Service life (L_{10h})	t_L	h	30,000				
	Efficiency at full load[2]	η	%	98				1
				97				2
	Min. operating temperature	T_{min}	°C (°F)	-25 (-13)				
	Max. operating temperature	T_{max}		90 (194)				
	Protection class			IP54				
S	Standard lubrication			Grease (lifetime lubrication)				
F	Food grade lubrication			Grease (lifetime lubrication)				
L	Low temperature lubrication[3]			Grease (lifetime lubrication)				
	Installation position			Any				
S	Standard backlash	j_t	arcmin	< 15	< 10	< 7	< 7	1
				< 19	< 12	< 9	< 9	2
	Torsional stiffness[2]	c_g	Nm /arcmin (lb_f.in/ arcmin)	1.7 - 4.1 (15 - 36)	5.5 - 11.0 (49 - 97)	16.3 - 33.5 (144 - 296)	36.0 - 72.0 (319 - 637)	1
				1.5 - 5.6 (13 - 50)	5.1 - 11.9 (45 - 105)	15.9 - 39.5 (141 - 350)	29.5 - 88.0 (261 - 779)	2
	Gearbox weight[2]	m_G	kg (lb_m)	0.7 (1.5)	1.1 (2.4)	3.0 (6.6)	6.4 - 6.5 (14.2 - 14.4)	1
				0.8 (1.7)	1.3 - 1.4 (2.8 - 3.0)	3.4 - 3.7 (7.6 - 8.1)	8.1 - 8.5 (17.9 - 18.6)	2
S	Standard surface			Housing: Steel – heat-treated and post-oxidized (black)				
	Running noise[4]	Q_g	dB(A)	58	58	60	65	
	Max. bending moment based on the gearbox input flange[5]	M_b	Nm (lb_f.in)	4.5 (40)	12 (106)	16 (142)	40 (354)	

Output shaft loads			PLFE055	PLFE064	PLFE090	PLFE110	p[1]
Radial force for 20,000 h[6][7]	$F_{r\,20.000\,h}$	N (lb_f)	550 (124)	550 (124)	1400 (315)	2400 (540)	
Axial force for 20,000 h[6][7]	$F_{a\,20.000\,h}$		840 (189)	1200 (270)	3000 (674)	3300 (742)	
Radial force for 30,000 h[6][7]	$F_{r\,30.000\,h}$		480 (108)	500 (112)	1200 (270)	2100 (472)	
Axial force for 30,000 h[6][7]	$F_{a\,30.000\,h}$		710 (160)	1200 (270)	3000 (674)	3300 (742)	
Maximum radial force[7][8]	$F_{r\,Stat}$		1150 (259)	900 (202)	2200 (495)	3800 (854)	
Maximum axial force[7][8]	$F_{a\,Stat}$		1000 (225)	1200 (270)	3300 (742)	5200 (1169)	
Tilting moment for 20,000 h[6][8]	$M_{K\,20.000\,h}$	Nm (lb_f.in)	12 (107)	12 (106)	46 (407)	109 (965)	
Tilting moment for 30,000 h[6][8]	$M_{K\,30.000\,h}$		11 (94)	11 (97)	40 (354)	96 (850)	

Moment of inertia			PLFE055	PLFE064	PLFE090	PLFE110	p[1]
Mass moment of inertia[2]	J	kgcm² (lb_f.in.s²10⁻⁴)	0.018 - 0.064 (0.159 - 0.566)	0.072 - 0.210 (0.637 - 1.859)	0.406 - 1.164 (3.593 - 10.302)	1.484 - 3.430 (13.135 - 30.358)	1
			0.014 - 0.030 (0.124 - 0.266)	0.064 - 0.130 (0.566 - 1.151)	0.356 - 0.666 (3.151 - 5.895)	1.377 - 2.407 (12.187 - 21.304)	2

(1) Number of stages
(2) The ratio-dependent values can be retrieved in Tec Data Finder – www.neugart.com
(3) T_{min} = -40°C. Optimal operating temperature max. 50°C
(4) Sound pressure level from 1 m, measured on input running at n_1=3000 rpm no load; i=5
(5) Max. motor weight* in kg = 0.2 x M_b / motor length in m
* with symmetrically distributed motor weight
* with horizontal and stationary mounting
(6) These values are based on an output shaft speed of n_2=100 rpm
(7) Based on the end of the output shaft
(8) Other (sometimes higher) values following changes to T_{2N}, F_r, F_a, cycle, and service life of bearing. Application specific configuration with NCP – www.neugart.com

Output torques			PLFE055	PLFE064	PLFE090	PLFE110	i(1)	p(2)
Nominal output torque(3)	T_{2N}	Nm (lb_f.in)	11 (97)	28 (248)	85 (752)	115 (1018)	3	1
			15 (133)	38 (336)	115 (1018)	155 (1372)	4	
			14 (124)	40 (354)	110 (974)	195 (1726)	5	
			8,5 (75)	25 (221)	65 (575)	135 (1195)	7	
			6 (53)	18 (159)	50 (443)	120 (1062)	8	
			5 (44)	15 (133)	38 (336)	95 (841)	10	
			16.5 (146)	44 (389)	130 (1151)	210 (1859)	9	2
			20 (177)	44 (389)	120 (1062)	260 (2301)	12	
			18 (159)	44 (389)	110 (974)	230 (2036)	15	
			20 (177)	44 (389)	120 (1062)	260 (2301)	16	
			20 (177)	44 (389)	120 (1062)	260 (2301)	20	
			18 (159)	40 (354)	110 (974)	230 (2036)	25	
			20 (177)	44 (389)	120 (1062)	260 (2301)	32	
			18 (159)	40 (354)	110 (974)	230 (2036)	40	
			7.5 (66)	18 (159)	50 (443)	120 (1062)	64	
			5 (44)	15 (133)	38 (336)	95 (841)	100	
Max. output torque(4)	T_{2max}	Nm (lb_f.in)	17.5 (155)	45 (398)	136 (1204)	184 (1629)	3	1
			24 (212)	61 (540)	184 (1629)	248 (2195)	4	
			22 (195)	64 (566)	176 (1558)	312 (2761)	5	
			13.5 (119)	40 (354)	104 (920)	216 (1912)	7	
			10 (89)	29 (257)	80 (708)	192 (1699)	8	
			8 (71)	24 (212)	61 (540)	152 (1345)	10	
			26 (230)	70 (620)	208 (1841)	336 (2974)	9	2
			32 (283)	70 (620)	192 (1699)	416 (3682)	12	
			29 (257)	70 (620)	176 (1558)	368 (3257)	15	
			32 (283)	70 (620)	192 (1699)	416 (3682)	16	
			32 (283)	70 (620)	192 (1699)	416 (3682)	20	
			29 (257)	64 (566)	176 (1558)	368 (3257)	25	
			32 (283)	70 (620)	192 (1699)	416 (3682)	32	
			29 (257)	64 (566)	176 (1558)	368 (3257)	40	
			12 (106)	29 (257)	80 (708)	192 (1699)	64	
			8 (71)	24 (212)	61 (540)	152 (1345)	100	

(1) Ratios ($i=n_1/n_2$)
(2) Number of stages
(3) Application specific configuration with NCP – www.neugart.com
(4) 30,000 rotations of the output shaft permitted; see page 166

Output torques			PLFE055	PLFE064	PLFE090	PLFE110	i[1]	p[2]
Emergency stop torque[3]	T_{2Stop}	Nm (lb_f.in)	22.5 (199)	66 (584)	180 (1593)	390 (3452)	3	1
			30 (266)	88 (779)	240 (2124)	520 (4602)	4	
			36 (319)	80 (708)	220 (1947)	500 (4425)	5	
			26 (230)	80 (708)	178 (1575)	340 (3009)	7	
			27 (239)	80 (708)	190 (1682)	380 (3363)	8	
			27 (239)	80 (708)	200 (1770)	480 (4248)	10	
			33 (292)	88 (779)	260 (2301)	500 (4425)	9	2
			40 (354)	88 (779)	240 (2124)	520 (4602)	12	
			36 (319)	88 (779)	220 (1947)	500 (4425)	15	
			40 (354)	88 (779)	240 (2124)	520 (4602)	16	
			40 (354)	88 (779)	240 (2124)	520 (4602)	20	
			36 (319)	80 (708)	220 (1947)	500 (4425)	25	
			40 (354)	88 (779)	240 (2124)	520 (4602)	32	
			36 (319)	80 (708)	220 (1947)	500 (4425)	40	
			27 (239)	80 (708)	190 (1682)	380 (3363)	64	
			27 (239)	80 (708)	200 (1770)	480 (4248)	100	

Input speeds			PLFE055	PLFE064	PLFE090	PLFE110	i[1]	p[2]
Average thermal input speed at T_{2N} and S1[4][5]	n_{1N}	rpm	5000	3950[6]	2800[6]	2350[6]	3	1
			5000	4500[6]	3000[6]	2550[6]	4	
			5000	4500[6]	3550[6]	2700[6]	5	
			5000	4500	4000	3500[6]	7	
			5000	4500	4000	3500[6]	8	
			5000	4500	4000	3500	10	
			5000	4500[6]	4000[6]	2850[6]	9	2
			5000	4500	4000[6]	3100[6]	12	
			5000	4500	4000	3500[6]	15	
			5000	4500	4000	3500[6]	16	
			5000	4500	4000	3500[6]	20	
			5000	4500	4000	3500	25	
			5000	4500	4000	3500	32	
			5000	4500	4000	3500	40	
			5000	4500	4000	3500	64	
			5000	4500	4000	3500	100	
Max. mechanical input speed[4]	n_{1Limit}	rpm	18,000	13,000	7000	6500		

(1) Ratios ($i=n_1/n_2$)
(2) Number of stages
(3) Permitted 1000 times
(4) Application-specific speed configurations with NCP – www.neugart.com
(5) See page 166 for the definition
(6) Average thermal input speed at 50% T_{2N} and S1

PLFE055
PLFE064
PLFE090

PLFE110

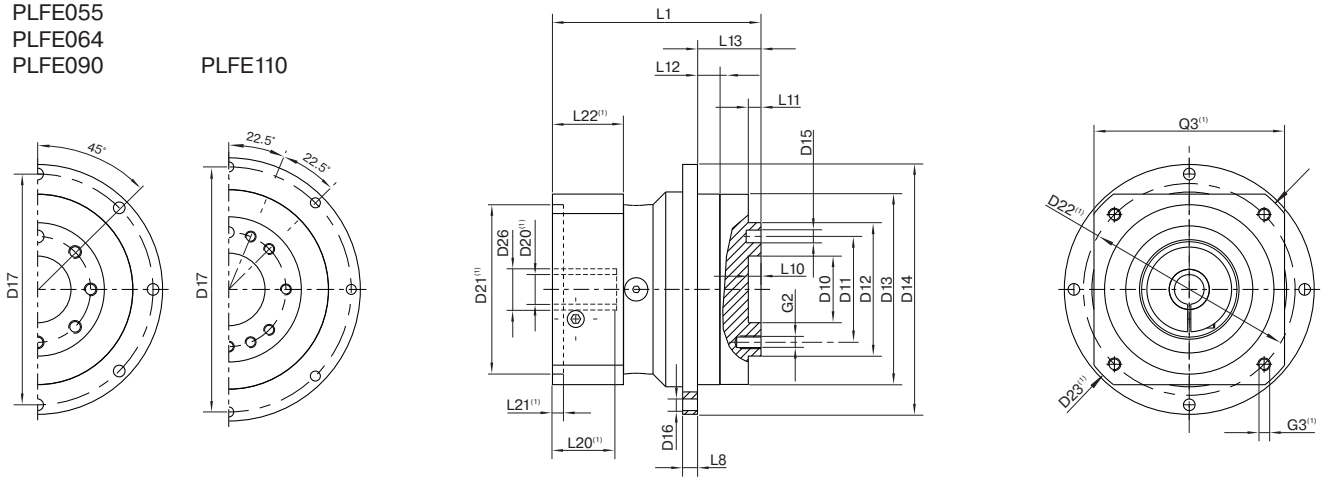

Drawing corresponds to a PLFE090 / 1-stage / flange output shaft with dowel hole / 19 mm clamping system / motor adaptation – one part / B5 flange type motor

(1) The dimensions vary with the motor/gearbox flange. The input flange dimensions can be retrieved for each specific motor in Tec Data Finder at www.neugart.com

Geometry(2)			**PLFE055**	**PLFE064**	**PLFE090**	**PLFE110**	**p**(3)	**Code**
Centering diameter output shaft	D10	H7	16 (0.630)	20 (0.787)	31.5 (1.240)	40 (1.575)		
Pitch circle diameter output shaft	D11		25 (0.984)	31.5 (1.240)	50 (1.969)	63 (2.480)		
Flange output shaft diameter	D12	h7	34 (1.339)	40 (1.575)	63 (2.480)	80 (3.150)		
Centering diameter output flange	D13		55 (2.165)	64 (2.520)	90 (3.543)	110 (4.331)		
Flange diameter output	D14		72 (2.835)	86 (3.386)	118 (4.646)	145 (5.709)		
Mounting bore output	D16		3.4 8x45°	4.5 8x45°	5.5 8x45°	5.5 8x45°		
Pitch circle diameter output flange	D17		67 (2.638)	79 (3.110)	109 (4.291)	135 (5.315)		
Min. total length	L1		71.5 (2.815)	69 (2.717)	98.5 (3.878)	125.5 (4.941)	1	
			84.5 (3.327)	81.5 (3.209)	116 (4.567)	152.5 (6.004)	2	
Flange thickness output	L8		4 (0.157)	4 (0.157)	7 (0.276)	8 (0.315)		
Centering depth output shaft	L10		6 (0.236)	4 (0.157)	6 (0.236)	6 (0.236)		
	L11		3 (0.118)	3 (0.118)	6 (0.236)	6 (0.236)		
Centering depth output flange	L12		8 (0.315)	7.5 (0.295)	10.5 (0.413)	10.5 (0.413)		
Output flange length	L13		19 (0.748)	19.5 (0.768)	30 (1.181)	29 (1.142)		
Motor shaft diameter j6/k6	D20		More information on page 163/164					
Clamping system diameter input	D26							
Flange output shaft with dowel hole (ISO 9409-1)								**E**
Dowel hole x depth	D15	H7	4x5	5x6	6x7	6x7		
Number x thread x depth	G2		7 x M4x6	7 x M5x7	7 x M6x10	11 x M6x12		

(2) Dimensions in mm
(3) Number of stages



PFHE

The planetary gearbox with flange output shaft for high-load applications

The **PFHE** represents an economically attractive alternative for high-load applications in which high radial loads occur. The combination of special pre-stressed inclined roller bearings and a flanged output shaft in accordance with ISO 9409-1 gives the **PFHE** a very high load capacity. Thanks to the radial shaft seal that is used, this gearbox achieves protection class IP65 at the output side and can therefore also withstand adverse usage conditions.

Nominal output torque	**15 - 260 Nm**
Radial force	**2300 - 5150 N**
Axial force	**2850 - 6450 N**
Torsional backlash	**7 - 12 arcmin**
Protection class	**IP65**

Frame sizes

64 **90** **110**



- Economy Line
- Coaxial gearbox
- Equidirectional rotation
- Spur gear
- Extra large round type output flange
- Preloaded angular contact roller bearings
- Rotary shaft seal
- Flange output shaft (ISO 9409-1)
- Planet carrier in disc design
- Option: Planetary gearbox with mounted pinion on page 132

Detailed explanations of the technical features starting on page 173.

Code	Gearbox characteristics			PFHE064	PFHE090	PFHE110	p(1)
	Service life (L_{10h})	t_L	h	30,000			
	Efficiency at full load(2)	η	%	97			
	Min. operating temperature	T_{min}	°C (°F)	-25 (-13)			
	Max. operating temperature	T_{max}		90 (194)			
	Protection class			IP65			
S	Standard lubrication			Grease (lifetime lubrication)			
F	Food grade lubrication			Grease (lifetime lubrication)			
L	Low temperature lubrication(3)			Grease (lifetime lubrication)			
	Installation position			Any			
S	Standard backlash	j_t	arcmin	< 10	< 7	< 7	1
				< 12	< 9	< 9	2
	Torsional stiffness(2)	c_g	Nm /arcmin (lb_f.in/ arcmin)	5.4 - 10.6 (48 - 94)	16.1 - 32.5 (142 - 288)	37.0 - 77.0 (327 - 682)	1
				5.0 - 11.5 (44 - 102)	15.7 - 38.5 (139 - 341)	30.0 - 95.0 (266 - 841)	2
	Gearbox weight(2)	m_G	kg (lb_m)	1.1 (2.4)	3.1 (6.8)	5.9 - 6.0 (12.9 - 13.2)	1
				1.3 - 1.4 (2.9 - 3.1)	3.5 - 3.8 (7.8 - 8.3)	7.6 - 7.9 (16.7 - 17.4)	2
S	Standard surface			Housing: Steel – heat-treated and post-oxidized (black)			
	Running noise(4)	Q_g	dB(A)	60	62	65	
	Max. bending moment based on the gearbox input flange(5)	M_b	Nm (lb_f.in)	8 (71)	16 (142)	40 (354)	

Output shaft loads			PFHE064	PFHE090	PFHE110	p(1)
Radial force for 20,000 h(6)(7)	$F_{r\ 20.000\ h}$	N (lb_f)	2300 (517)	4100 (922)	5150 (1158)	
Axial force for 20,000 h(6)(7)	$F_{a\ 20.000\ h}$		2850 (641)	5450 (1225)	6450 (1450)	
Radial force for 30,000 h(6)(7)	$F_{r\ 30.000\ h}$		2000 (450)	3650 (821)	4550 (1023)	
Axial force for 30,000 h(6)(7)	$F_{a\ 30.000\ h}$		2500 (562)	4800 (1079)	5600 (1259)	
Maximum radial force(7)(8)	$F_{r\ Stat}$		2300 (517)	4100 (922)	5150 (1158)	
Maximum axial force(7)(8)	$F_{a\ Stat}$		2850 (641)	5450 (1225)	6450 (1450)	
Tilting moment for 20,000 h(6)(8)	$M_{K\ 20.000\ h}$	Nm (lb_f.in)	110 (974)	278 (2461)	407 (3602)	
Tilting moment for 30,000 h(6)(8)	$M_{K\ 30.000\ h}$		96 (850)	248 (2195)	360 (3186)	

Moment of inertia			PFHE064	PFHE090	PFHE110	p(1)
Mass moment of inertia(2)	J	$kgcm^2$ ($lb_f.in.s^2 10^{-4}$)	0.073 - 0.224 (0.646 - 1.983)	0.407 - 1.170 (3.602 - 10.355)	1.505 - 3.658 (13.320 - 32.376)	1
			0.064 - 0.132 (0.566 - 1.168)	0.356 - 0.667 (3.151 - 5.903)	1.377 - 2.432 (12.187 - 21.525)	2

(1) Number of stages
(2) The ratio-dependent values can be retrieved in Tec Data Finder – www.neugart.com
(3) T_{min} = -40°C. Optimal operating temperature max. 50°C
(4) Sound pressure level from 1 m, measured on input running at n_1=3000 rpm no load; i=5
(5) Max. motor weight* in kg = 0.2 x M_b / motor length in m
* with symmetrically distributed motor weight
* with horizontal and stationary mounting
(6) These values are based on an output shaft speed of n_2=100 rpm
(7) Based on the end of the output shaft
(8) Other (sometimes higher) values following changes to T_{2N}, F_r, F_a, cycle, and service life of bearing. Application specific configuration with NCP – www.neugart.com

Output torques			PFHE064	PFHE090	PFHE110	i[1]	p[2]
Nominal output torque[3]	T_{2N}	Nm (lb_f.in)	28 (248)	85 (752)	115 (1018)	3	1
			38 (336)	115 (1018)	155 (1372)	4	
			40 (354)	110 (974)	195 (1726)	5	
			25 (221)	65 (575)	135 (1195)	7	
			18 (159)	50 (443)	120 (1062)	8	
			15 (133)	38 (336)	95 (841)	10	
			44 (389)	130 (1151)	210 (1859)	9	2
			44 (389)	120 (1062)	260 (2301)	12	
			44 (389)	110 (974)	230 (2036)	15	
			44 (389)	120 (1062)	260 (2301)	16	
			44 (389)	120 (1062)	260 (2301)	20	
			40 (354)	110 (974)	230 (2036)	25	
			44 (389)	120 (1062)	260 (2301)	32	
			40 (354)	110 (974)	230 (2036)	40	
			18 (159)	50 (443)	120 (1062)	64	
			15 (133)	38 (336)	95 (841)	100	
Max. output torque[4]	T_{2max}	Nm (lb_f.in)	45 (398)	136 (1204)	184 (1629)	3	1
			61 (540)	184 (1629)	248 (2195)	4	
			64 (566)	176 (1558)	312 (2761)	5	
			40 (354)	104 (920)	216 (1912)	7	
			29 (257)	80 (708)	192 (1699)	8	
			24 (212)	61 (540)	152 (1345)	10	
			70 (620)	208 (1841)	336 (2974)	9	2
			70 (620)	192 (1699)	416 (3682)	12	
			70 (620)	176 (1558)	368 (3257)	15	
			70 (620)	192 (1699)	416 (3682)	16	
			70 (620)	192 (1699)	416 (3682)	20	
			64 (566)	176 (1558)	368 (3257)	25	
			70 (620)	192 (1699)	416 (3682)	32	
			64 (566)	176 (1558)	368 (3257)	40	
			29 (257)	80 (708)	192 (1699)	64	
			24 (212)	61 (540)	152 (1345)	100	

(1) Ratios ($i=n_1/n_2$)
(2) Number of stages
(3) Application specific configuration with NCP – www.neugart.com
(4) 30,000 rotations of the output shaft permitted; see page 166

Output torques			PFHE064	PFHE090	PFHE110	i[1]	p[2]
Emergency stop torque[3]	T_{2Stop}	Nm (lb_f.in)	66 (584)	180 (1593)	390 (3452)	3	1
			88 (779)	240 (2124)	520 (4602)	4	
			80 (708)	220 (1947)	500 (4425)	5	
			80 (708)	178 (1575)	340 (3009)	7	
			80 (708)	190 (1682)	380 (3363)	8	
			80 (708)	200 (1770)	480 (4248)	10	
			88 (779)	260 (2301)	500 (4425)	9	2
			88 (779)	240 (2124)	520 (4602)	12	
			88 (779)	220 (1947)	500 (4425)	15	
			88 (779)	240 (2124)	520 (4602)	16	
			88 (779)	240 (2124)	520 (4602)	20	
			80 (708)	220 (1947)	500 (4425)	25	
			88 (779)	240 (2124)	520 (4602)	32	
			80 (708)	220 (1947)	500 (4425)	40	
			80 (708)	190 (1682)	380 (3363)	64	
			80 (708)	200 (1770)	480 (4248)	100	

Input speeds			PFHE064	PFHE090	PFHE110	i[1]	p[2]
Average thermal input speed at T_{2N} and S1[4][5]	n_{1N}	rpm	2350[6]	1900[6]	1600[6]	3	1
			2950[6]	2200[6]	1900[6]	4	
			3550[6]	2750[6]	2200[6]	5	
			4500	4000[6]	3350[6]	7	
			4500	4000	3500[6]	8	
			4500	4000	3500	10	
			4500	4000[6]	3300[6]	9	2
			4500	4000	3500[6]	12	
			4500	4000	3500	15	
			4500	4000	3500	16	
			4500	4000	3500	20	
			4500	4000	3500	25	
			4500	4000	3500	32	
			4500	4000	3500	40	
			4500	4000	3500	64	
			4500	4000	3500	100	
Max. mechanical input speed[4]	n_{1Limit}	rpm	7500	7000	6500		

[1] Ratios ($i=n_1/n_2$)
[2] Number of stages
[3] Permitted 1000 times
[4] Application-specific speed configurations with NCP – www.neugart.com
[5] See page 166 for the definition
[6] Average thermal input speed at 50% T_{2N} and S1

PFHE064
PFHE090

PFHE110

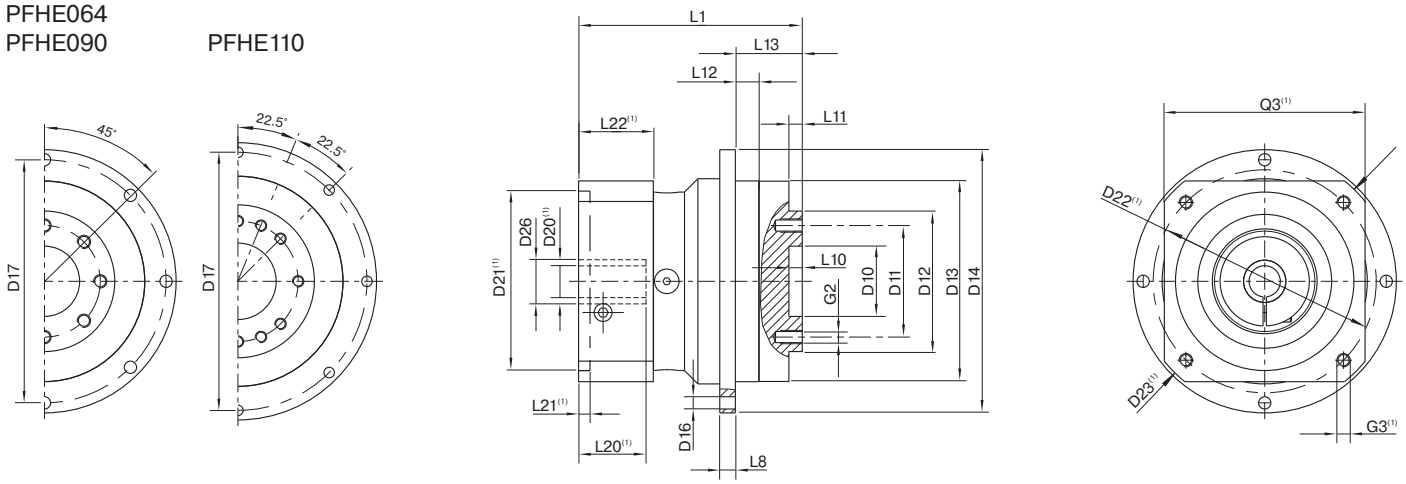

Drawing corresponds to a PFHE090 / 1-stage / flange output shaft / 19 mm clamping system / motor adaptation – one part / B5 flange type motor

(1) The dimensions vary with the motor/gearbox flange. The input flange dimensions can be retrieved for each specific motor in Tec Data Finder at www.neugart.com

Geometry(2)			**PFHE064**	**PFHE090**	**PFHE110**	**p**(3)	**Code**
Centering diameter output shaft	D10	H7	20 (0.787)	31.5 (1.240)	40 (1.575)		
Pitch circle diameter output shaft	D11		31.5 (1.240)	50 (1.969)	63 (2.480)		
Flange output shaft diameter	D12	h7	40 (1.575)	63 (2.480)	80 (3.150)		
Centering diameter output flange	D13		64 (2.520)	90 (3.543)	110 (4.331)		
Flange diameter output	D14		86 (3.386)	118 (4.646)	145 (5.709)		
Mounting bore output	D16		4.5 8x45°	5.5 8x45°	5.5 8x45°		
Pitch circle diameter output flange	D17		79 (3.110)	109 (4.291)	135 (5.315)		
Min. total length	L1		72 (2.835)	100.5 (3.957)	117 (4.606)	1	
			84.5 (3.327)	118 (4.646)	144 (5.669)	2	
Flange thickness output	L8		4 (0.157)	7 (0.276)	8 (0.315)		
Centering depth output shaft	L10		4 (0.157)	6 (0.236)	6 (0.236)		
	L11		3 (0.118)	6 (0.236)	7 (0.256)		
Centering depth output flange	L12		7.5 (0.295)	10.5 (0.413)	10.5 (0.413)		
Output flange length	L13		19.5 (0.768)	30 (1.181)	29 (1.142)		
Motor shaft diameter j6/k6	D20		More information on page 163/164				
Clamping system diameter input	D26						
Flange output shaft (similar ISO 9409-1)							**D**
Number x thread x depth	G2		8 x M5x7	8 x M6x10	12 x M6x12		

(2) Dimensions in mm
(3) Number of stages

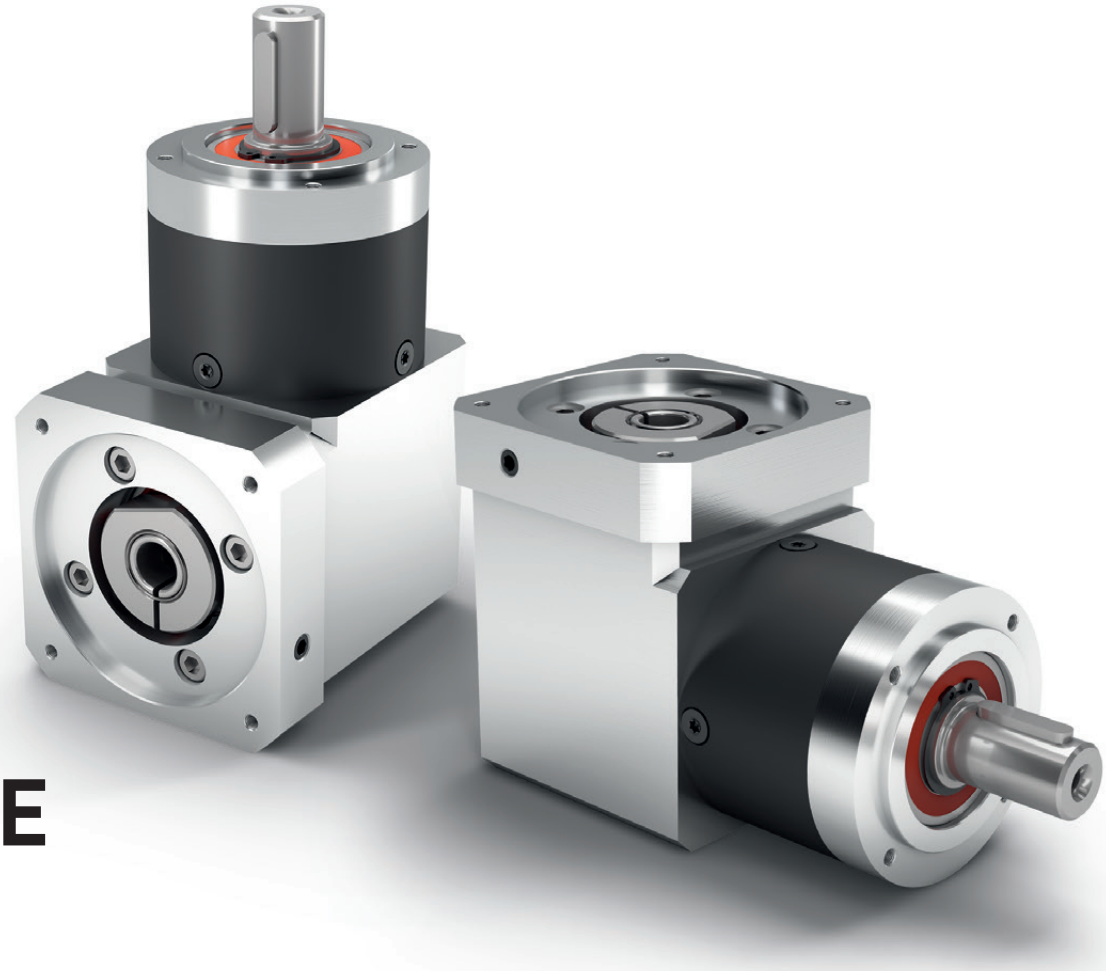

WPLE

The versatile right angle planetary gearbox with lower weight and appealing cost effectiveness

The **WPLE** consistently continues the advantages of the Economy series. With its compact but powerful design, it is perfectly suited for dynamic multi-axis systems. Our right-angle gearbox is lubricated for life, easy to mount and offers an unmatched price/performance ratio.

Nominal output torque	**5 - 260 Nm**
Radial force	**200 - 1750 N**
Axial force	**200 - 2500 N**
Torsional backlash	**11 - 28 arcmin**
Protection class	**IP54**

Frame sizes

40 **60** **80** **120**

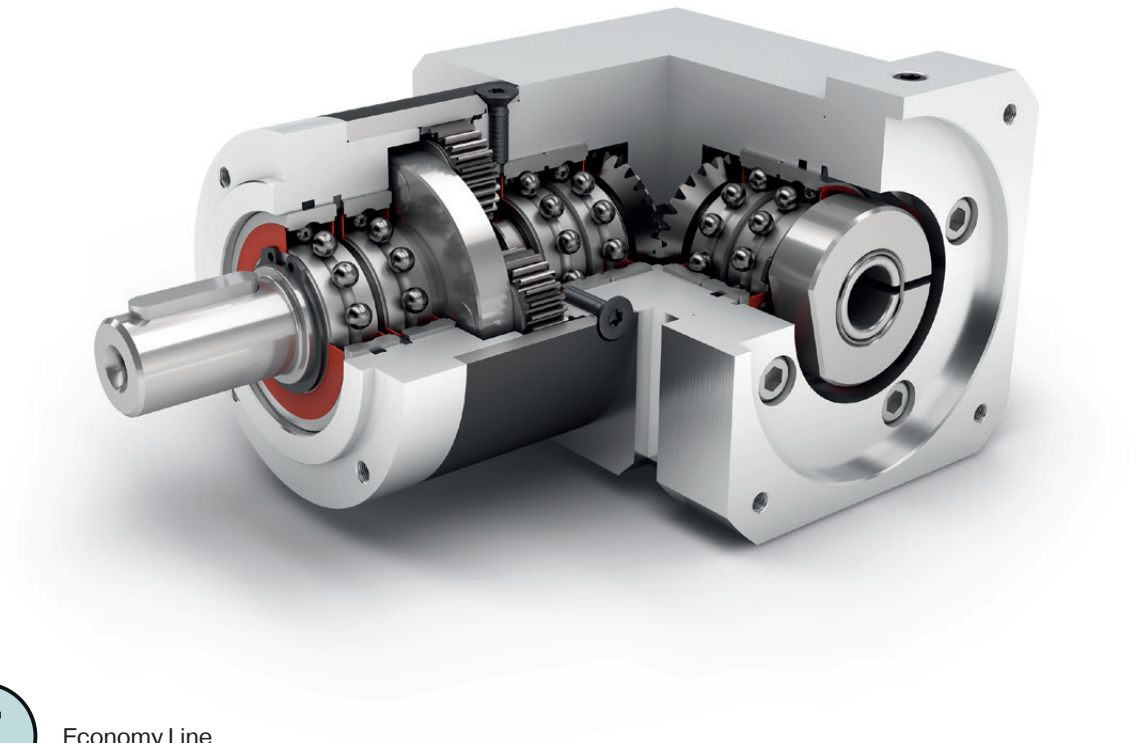

Economy Line

Right angle gearbox

Spur gear

Round type output flange

3 i 512

High ratio variety i=3 up to i=512

Equidirectional rotation

Bevel gear right angle stage

Low-friction deep groove ball bearings

Planet carrier in disc design

Detailed explanations of the technical features starting on page 173.

Code	Gearbox characteristics			WPLE040	WPLE060	WPLE080	WPLE120	p(1)
	Service life (L_{10h})	t_L	h	20,000				
	Service life at T_{2N} x 0,88			30,000				
	Efficiency at full load(2)	η	%	95				1
				94				2
				88				3
	Min. operating temperature	T_{min}	°C (°F)	-25 (-13)				
	Max. operating temperature	T_{max}		90 (194)				
	Protection class			IP54				
S	Standard lubrication			Grease (lifetime lubrication)				
F	Food grade lubrication			Grease (lifetime lubrication)				
L	Low temperature lubrication(3)			Grease (lifetime lubrication)				
	Installation position			Any				
S	Standard backlash	j_t	arcmin	< 21	< 16	< 13	< 11	1
				< 25	< 18	< 15	< 13	2
				< 28	< 21	< 17	< 15	3
	Torsional stiffness(2)	c_g	Nm /arcmin (lb_f.in/ arcmin)	0.5 - 0.8 (4 - 7)	1.5 - 2.3 (13 - 20)	4.0 - 7.9 (35 - 70)	9.9 - 17.5 (88 - 155)	1
				0.7 - 1.0 (6 - 8)	2.2 - 2.7 (19 - 24)	6.9 - 9.6 (61 - 85)	16.4 - 20.5 (145 - 181)	2
				0.8 - 1.0 (7 - 9)	2.3 - 2.8 (20 - 25)	7.9 - 10.4 (70 - 92)	17.5 - 22.0 (155 - 195)	3
	Gearbox weight(2)	m_G	kg (lb_m)	0.6 (1.3)	1.6 (3.5)	3.7 (8.1)	9.6 - 9.8 (21.3 - 21.5)	1
				0.7 (1.5)	1.8 (4.0)	4.1 - 4.2 (9.1 - 9.3)	11.4 - 11.6 (25.1 - 25.5)	2
				0.7 - 0.8 (1.6 - 1.7)	2.0 (4.4)	4.6 - 4.7 (10.2 - 10.4)	13.2 - 13.4 (29.1 - 29.6)	3
S	Standard surface			Housing: Steel – heat-treated and post-oxidized (black)				
	Running noise(4)	Q_g	dB(A)	68	70	73	75	
	Max. bending moment based on the gearbox input flange(5)	M_b	Nm (lb_f.in)	2 (18)	5 (44)	10.5 (93)	26 (230)	

Output shaft loads			WPLE040	WPLE060	WPLE080	WPLE120	p(1)
Radial force for 20,000 h(6)(7)	$F_{r\ 20.000\ h}$	N (lb_f)	200 (45)	400 (90)	750 (169)	1750 (393)	
Axial force for 20,000 h(6)(7)	$F_{a\ 20.000\ h}$		200 (45)	500 (112)	1000 (225)	2500 (562)	
Radial force for 30,000 h(6)(7)	$F_{r\ 30.000\ h}$		160 (36)	340 (76)	650 (146)	1500 (337)	
Axial force for 30,000 h(6)(7)	$F_{a\ 30.000\ h}$		160 (36)	450 (101)	900 (202)	2100 (472)	
Maximum radial force(7)(8)	$F_{r\ Stat}$		200 (45)	700 (157)	1250 (281)	2000 (450)	
Maximum axial force(7)(8)	$F_{a\ Stat}$		240 (54)	800 (180)	1600 (360)	3800 (854)	
Tilting moment for 20,000 h(6)(8)	$M_{K\ 20.000\ h}$	Nm (lb_f.in)	5 (44)	14 (124)	31 (274)	101 (894)	
Tilting moment for 30,000 h(6)(8)	$M_{K\ 30.000\ h}$		4 (35)	12 (106)	27 (239)	86 (761)	

Moment of inertia			WPLE040	WPLE060	WPLE080	WPLE120	p(1)
Mass moment of inertia(2)	J	$kgcm^2$ ($lb_f.in.s^2 10^{-4}$)	0.032 - 0.049 (0.283 - 0.434)	0.215 - 0.351 (1.903 - 3.107)	0.862 - 1.226 (7.629 - 10.851)	2.645 - 3.670 (23.410 - 32.482)	1
			0.032 - 0.048 (0.283 - 0.425)	0.216 - 0.344 (1.912 - 3.045)	0.868 - 1.184 (7.682 - 10.479)	2.679 - 3.597 (23.711 - 31.836)	2
			0.032 - 0.047 (0.283 - 0.416)	0.216 - 0.226 (1.912 - 2.000)	0.868 - 1.162 (7.682 - 10.285)	2.679 - 3.506 (23.711 - 31.031)	3

(1) Number of stages
(2) The ratio-dependent values can be retrieved in Tec Data Finder – www.neugart.com
(3) T_{min} = -40°C. Optimal operating temperature max. 50°C
(4) Sound pressure level from 1 m, measured on input running at n_1=3000 rpm no load; i=5
(5) Max. motor weight* in kg = 0.2 x M_b / motor length in m
* with symmetrically distributed motor weight
* with horizontal and stationary mounting
(6) These values are based on an output shaft speed of n_2=100 rpm
(7) Based on center of output shaft
(8) Other (sometimes higher) values following changes to T_{2N}, F_r, F_a, cycle, and service life of bearing. Application specific configuration with NCP – www.neugart.com

Output torques			WPLE040	WPLE060	WPLE080	WPLE120	i[1]	p[2]
Nominal output torque[3][4]	T_{2N}	Nm (lb_f.in)	4,5 (40)	14 (124)	40 (354)[5]	80 (708)[5]	3	1
			6 (53)	19 (168)	53 (469)[5]	105 (929)[5]	4	
			7,5 (66)	24 (212)	67 (593)[5]	130 (1151)[5]	5	
			8,5 (75)	25 (221)	65 (575)	135 (1195)	7	
			6 (53)	18 (159)	50 (443)	120 (1062)	8	
			5 (44)	15 (133)	38 (336)	95 (841)	10	
			16,5 (146)[5]	44 (389)[5]	130 (1151)[5]	210 (1859)[5]	9	2
			20 (177)[5]	44 (389)	120 (1062)[5]	260 (2301)[5]	12	
			18 (159)[5]	44 (389)	110 (974)	230 (2036)	15	
			20 (177)[5]	44 (389)	120 (1062)	260 (2301)	16	
			20 (177)[5]	44 (389)	120 (1062)	260 (2301)	20	
			18 (159)	40 (354)	110 (974)	230 (2036)	25	
			20 (177)	44 (389)	120 (1062)	260 (2301)	32	
			18 (159)	40 (354)	110 (974)	230 (2036)	40	
			7,5 (66)	18 (159)	50 (443)	120 (1062)	64	
			20 (177)	44 (389)	110 (974)	260 (2301)	60	3
			20 (177)	44 (389)	120 (1062)	260 (2301)	80	
			20 (177)	44 (389)	120 (1062)	260 (2301)	100	
			18 (159)	44 (389)	110 (974)	230 (2036)	120	
			20 (177)	44 (389)	120 (1062)	260 (2301)	160	
			18 (159)	40 (354)	110 (974)	230 (2036)	200	
			20 (177)	44 (389)	120 (1062)	260 (2301)	256	
			18 (159)	40 (354)	110 (974)	230 (2036)	320	
			7,5 (66)	18 (159)	50 (443)	120 (1062)	512	
Max. output torque[4][6]	T_{2max}	Nm (lb_f.in)	7 (62)	22 (195)	64 (566)	128 (1133)	3	1
			10 (89)	30 (266)	85 (752)	168 (1487)	4	
			12 (106)	38 (336)	107 (947)	208 (1841)	5	
			13,5 (119)	40 (354)	104 (920)	216 (1912)	7	
			10 (89)	29 (257)	80 (708)	192 (1699)	8	
			8 (71)	24 (212)	61 (540)	152 (1345)	10	
			26 (230)	70 (620)	208 (1841)	336 (2974)	9	2
			32 (283)	70 (620)	192 (1699)	416 (3682)	12	
			29 (257)	70 (620)	176 (1558)	368 (3257)	15	
			32 (283)	70 (620)	192 (1699)	416 (3682)	16	
			32 (283)	70 (620)	192 (1699)	416 (3682)	20	
			29 (257)	64 (566)	176 (1558)	368 (3257)	25	
			32 (283)	70 (620)	192 (1699)	416 (3682)	32	
			29 (257)	64 (566)	176 (1558)	368 (3257)	40	
			12 (106)	29 (257)	80 (708)	192 (1699)	64	
			32 (283)	70 (620)	176 (1558)	416 (3682)	60	3
			32 (283)	70 (620)	192 (1699)	416 (3682)	80	
			32 (283)	70 (620)	192 (1699)	416 (3682)	100	
			29 (257)	70 (620)	176 (1558)	368 (3257)	120	
			32 (283)	70 (620)	192 (1699)	416 (3682)	160	
			29 (257)	64 (566)	176 (1558)	368 (3257)	200	
			32 (283)	70 (620)	192 (1699)	416 (3682)	256	
			29 (257)	64 (566)	176 (1558)	368 (3257)	320	
			12 (106)	29 (257)	80 (708)	192 (1699)	512	

[1] Ratios ($i=n_1/n_2$)
[2] Number of stages
[3] Application specific configuration with NCP – www.neugart.com
[4] Values for feather key (code "A"): for repeated load
[5] Different service life: 10,000 h at T_{2N}
[6] 30,000 rotations of the output shaft permitted; see page 166

Output torques			WPLE040	WPLE060	WPLE080	WPLE120	i[1]	p[2]
Emergency stop torque[3]	T_{2Stop}	Nm (lb_f.in)	22,5 (199)	66 (584)	180 (1593)	360 (3186)	3	1
			28 (248)	86 (761)	240 (2124)	474 (4195)	4	
			35 (310)	80 (708)	220 (1947)	500 (4425)	5	
			26 (230)	80 (708)	178 (1575)	340 (3009)	7	
			27 (239)	80 (708)	190 (1682)	380 (3363)	8	
			25 (221)	70 (620)	170 (1505)	430 (3806)	10	
			33 (292)	88 (779)	260 (2301)	500 (4425)	9	2
			40 (354)	88 (779)	240 (2124)	520 (4602)	12	
			36 (319)	88 (779)	220 (1947)	500 (4425)	15	
			40 (354)	88 (779)	240 (2124)	520 (4602)	16	
			40 (354)	88 (779)	240 (2124)	520 (4602)	20	
			36 (319)	80 (708)	220 (1947)	500 (4425)	25	
			40 (354)	88 (779)	240 (2124)	520 (4602)	32	
			36 (319)	80 (708)	220 (1947)	500 (4425)	40	
			27 (239)	80 (708)	190 (1682)	380 (3363)	64	
			40 (354)	88 (779)	220 (1947)	520 (4602)	60	3
			40 (354)	88 (779)	240 (2124)	520 (4602)	80	
			40 (354)	88 (779)	240 (2124)	520 (4602)	100	
			36 (319)	88 (779)	220 (1947)	500 (4425)	120	
			40 (354)	88 (779)	240 (2124)	520 (4602)	160	
			36 (319)	80 (708)	220 (1947)	500 (4425)	200	
			40 (354)	88 (779)	240 (2124)	520 (4602)	256	
			36 (319)	80 (708)	220 (1947)	500 (4425)	320	
			27 (239)	80 (708)	190 (1682)	380 (3363)	512	

Input speeds			WPLE040	WPLE060	WPLE080	WPLE120	i[1]	p[2]
Average thermal input speed at T_{2N} and S1[4][5]	n_{1N}	rpm	5000	4500[6]	3500[6]	2850[6]	3	1
			5000	4500[6]	3550[6]	2950[6]	4	
			5000	4500[6]	3600[6]	3050[6]	5	
			5000	4500	4000[6]	3500[6]	7	
			5000	4500	4000[6]	3500[6]	8	
			5000	4500	4000	3500	10	
			5000	4500[6]	3250[6]	2950[6]	9	2
			5000	4500[6]	3850[6]	3050[6]	12	
			5000	4500	4000[6]	3500[6]	15	
			5000	4500	4000[6]	3450[6]	16	
			5000	4500	4000[6]	3500[6]	20	
			5000	4500	4000	3500[6]	25	
			5000	4500	4000	3500	32	
			5000	4500	4000	3500	40	
			5000	4500	4000	3500	64	
			5000	4500	4000	3500	60	3
			5000	4500	4000	3500	80	
			5000	4500	4000	3500	100	
			5000	4500	4000	3500	120	
			5000	4500	4000	3500	160	
			5000	4500	4000	3500	200	
			5000	4500	4000	3500	256	
			5000	4500	4000	3500	320	
			5000	4500	4000	3500	512	
Max. mechanical input speed[4]	n_{1Limit}	rpm	18,000	13,000	7000	6500		

[1] Ratios ($i=n_1/n_2$)
[2] Number of stages
[3] Permitted 1000 times
[4] Application-specific speed configurations with NCP – www.neugart.com
[5] See page 166 for the definition
[6] Average thermal input speed at 50% T_{2N} and S1

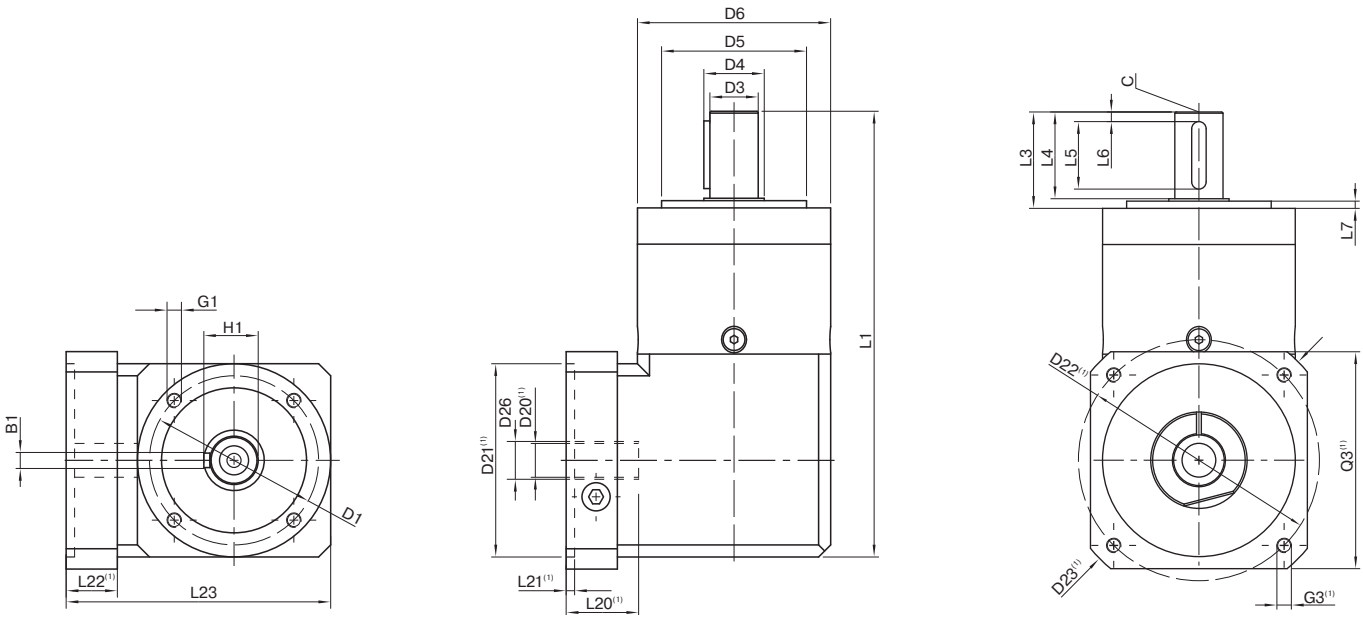

Drawing corresponds to a WPLE080 / 1-stage / output shaft with feather key / 19 mm clamping system / motor adaptation – 2-part – square universal flange / B5 flange type motor

(1) The dimensions vary with the motor/gearbox flange. The input flange dimensions can be retrieved for each specific motor in Tec Data Finder at www.neugart.com

Geometry(2)			**WPLE040**	**WPLE060**	**WPLE080**	**WPLE120**	**p**(3)	**Code**
Pitch circle diameter output	D1		34 (1.339)	52 (2.047)	70 (2.756)	100 (3.937)		
Shaft diameter output	D3	h7	10 (0.394)	14 (0.551)	20 (0.787)	25 (0.984)		
Shaft collar output	D4		12 (0.472)	17 (0.669)	25 (0.984)	35 (1.378)		
Centering diameter output	D5	h7	26 (1.024)	40 (1.575)	60 (2.362)	80 (3.150)		
Housing diameter	D6		40 (1.575)	60 (2.362)	80 (3.150)	115 (4.528)		
Mounting thread x depth	G1	4x	M4x6	M5x8	M6x10	M10x16		
Total length	L1		110 (4.331)	147 (5.787)	184 (7.244)	249.5 (9.823)	1	
			123 (4.843)	159.5 (6.280)	201.5 (7.933)	277 (10.906)	2	
			135.5 (5.335)	172 (6.772)	219 (8.622)	304.5 (11.988)	3	
Shaft length output	L3		26 (1.024)	35 (1.378)	40 (1.575)	55 (2.165)		
Centering depth output	L7		2 (0.079)	3 (0.118)	3 (0.118)	4 (0.157)		
Min. overall height	L23		62 (2.441)	85,5 (3.366)	109,5 (4.311)	145,5 (5.728)		
Motor shaft diameter j6/k6	D20		More information on page 163/164					
Clamping system diameter input	D26							
Output shaft with feather key (DIN 6885-1)			A 3x3x18	A 5x5x25	A 6x6x28	A 8x7x40		A
Feather key width (DIN 6885-1)	B1		3 (0.118)	5 (0.197)	6 (0.236)	8 (0.315)		
Shaft height including feather key (DIN 6885-1)	H1		11.2 (0.441)	16 (0.630)	22.5 (0.886)	28 (1.102)		
Shaft length from shoulder	L4		23 (0.906)	30 (1.181)	36 (1.417)	50 (1.969)		
Feather key length	L5		18 (0.709)	25 (0.984)	28 (1.102)	40 (1.575)		
Distance from shaft end	L6		2.5 (0.098)	2.5 (0.098)	4 (0.157)	5 (0.197)		
Center hole (DIN 332, type DR)	C		M3x9	M5x12.5	M6x16	M10x22		
Smooth output shaft								B
Shaft length from shoulder	L4		23 (0.906)	30 (1.181)	36 (1.417)	50 (1.969)		

(2) Dimensions in mm
(3) Number of stages



WPLQE

The right angle planetary gearbox with universal output flange – flexible installation options and for high forces

Our **WPLQE** is the right-angle gearbox with a square output flange. This makes it particularly easy to mount, versatile and, thanks to its larger deep groove ball bearings, also suitable for higher radial and axial forces.

Nominal output torque	**14 - 260 Nm**
Radial force	**900 - 2950 N**
Axial force	**1000 - 2500 N**
Torsional backlash	**11 - 21 arcmin**
Protection class	**IP54**

Frame sizes

60 **80** **120**

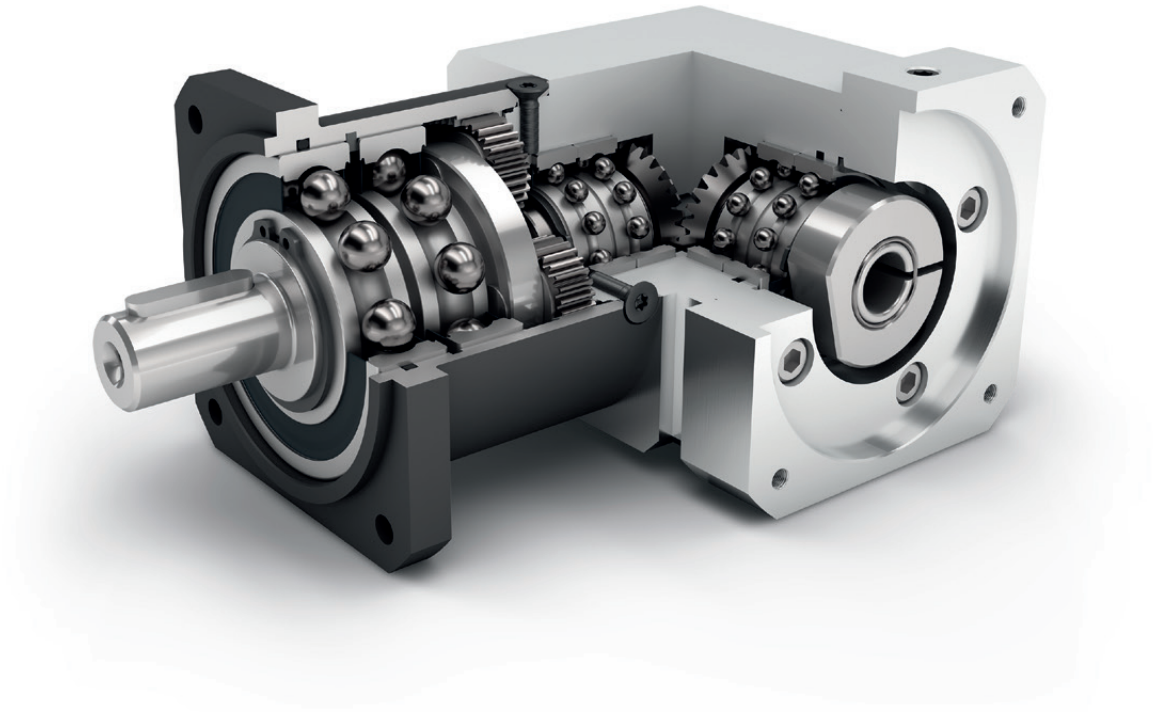

Economy Line

Right angle gearbox

Spur gear

Square type output flange

3 i 512

High ratio variety i=3 up to i=512

Equidirectional rotation

Bevel gear right angle stage

Reinforced deep groove ball bearings

Planet carrier in disc design

Detailed explanations of the technical features starting on page 173.

Code	Gearbox characteristics			WPLQE060	WPLQE080	WPLQE120	p[1]
	Service life (L_{10h})	t_L	h	20,000			
	Service life at T_{2N} x 0,88			30,000			
	Efficiency at full load[2]	η	%	95			1
				94			2
				88			3
	Min. operating temperature	T_{min}	°C (°F)	-25 (-13)			
	Max. operating temperature	T_{max}		90 (194)			
	Protection class			IP54			
S	Standard lubrication			Grease (lifetime lubrication)			
F	Food grade lubrication			Grease (lifetime lubrication)			
L	Low temperature lubrication[3]			Grease (lifetime lubrication)			
	Installation position			Any			
S	Standard backlash	j_t	arcmin	< 16	< 13	< 11	1
				< 18	< 15	< 13	2
				< 21	< 17	< 15	3
	Torsional stiffness[2]	c_g	Nm /arcmin (lb_f.in/ arcmin)	1.9 - 3.1 (17 - 27)	4.4 - 9.4 (39 - 83)	9.3 - 15.3 (82 - 135)	1
				3.1 - 3.8 (27 - 34)	8.0 - 11.9 (71 - 105)	14.7 - 18.0 (130 - 159)	2
				3.3 - 4.1 (29 - 36)	9.4 - 13.3 (83 - 118)	15.6 - 19.0 (138 - 168)	3
	Gearbox weight[2]	m_G	kg (lb_m)	1.8 (4.0)	4.2 - 4.5 (9.3 - 9.9)	10.4 - 10.5 (23.0 - 23.2)	1
				2.0 (4.4)	5.0 (11.0)	12.2 - 12.4 (26.9 - 27.3)	2
				2.2 (4.9)	5.5 (12.1)	14.0 - 14.2 (30.9 - 31.3)	3
S	Standard surface			Housing: Steel – heat-treated and post-oxidized (black)			
	Running noise[4]	Q_g	dB(A)	70	73	75	
	Max. bending moment based on the gearbox input flange[5]	M_b	Nm (lb_f.in)	5 (44)	10.5 (93)	26 (230)	

Output shaft loads			WPLQE060	WPLQE080	WPLQE120	p[1]
Radial force for 20,000 h[6][7]	$F_{r\,20.000\,h}$	N (lb_f)	900 (202)	2050 (461)	2950 (663)	
Axial force for 20,000 h[6][7]	$F_{a\,20.000\,h}$		1000 (225)	2500 (562)	2500 (562)	
Radial force for 30,000 h[6][7]	$F_{r\,30.000\,h}$		700 (157)	1700 (382)	2400 (540)	
Axial force for 30,000 h[6][7]	$F_{a\,30.000\,h}$		800 (180)	2000 (450)	2100 (472)	
Maximum radial force[7][8]	$F_{r\,Stat}$		1500 (337)	2500 (562)	4000 (899)	
Maximum axial force[7][8]	$F_{a\,Stat}$		1950 (438)	3800 (854)	3800 (854)	
Tilting moment for 20,000 h[6][8]	$M_{K\,20.000\,h}$	Nm (lb_f.in)	37 (327)	101 (894)	232 (2053)	
Tilting moment for 30,000 h[6][8]	$M_{K\,30.000\,h}$		29 (257)	84 (743)	188 (1664)	

Moment of inertia			WPLQE060	WPLQE080	WPLQE120	p[1]
Mass moment of inertia[2]	J	$kgcm^2$ ($lb_f.in.s^2 10^{-4}$)	0.216 - 0.365 (1.912 - 3.231)	0.874 - 1.355 (7.736 - 11.993)	2.648 - 3.702 (23.437 - 32.765)	1
			0.216 - 0.346 (1.912 - 3.062)	0.869 - 1.196 (7.691 - 10.585)	2.679 - 3.601 (23.711 - 31.872)	2
			0.216 - 0.226 (1.912 - 2.000)	0.868 - 1.162 (7.682 - 10.285)	2.679 - 3.506 (23.711 - 31.031)	3

[1] Number of stages
[2] The ratio-dependent values can be retrieved in Tec Data Finder – www.neugart.com
[3] T_{min} = -40°C. Optimal operating temperature max. 50°C
[4] Sound pressure level from 1 m, measured on input running at n_1=3000 rpm no load; i=5
[5] Max. motor weight* in kg = 0.2 x M_b / motor length in m
* with symmetrically distributed motor weight
* with horizontal and stationary mounting
[6] These values are based on an output shaft speed of n_2=100 rpm
[7] Based on center of output shaft
[8] Other (sometimes higher) values following changes to T_{2N}, F_r, F_a, cycle, and service life of bearing. Application specific configuration with NCP – www.neugart.com

Output torques			WPLQE060	WPLQE080	WPLQE120	i[1]	p[2]
Nominal output torque[3][4]	T_{2N}	Nm (lb_f.in)	14 (124)	40 (354)[5]	80 (708)[5]	3	1
			19 (168)	53 (469)[5]	105 (929)[5]	4	
			24 (212)	67 (593)[5]	130 (1151)[5]	5	
			25 (221)	65 (575)	135 (1195)	7	
			18 (159)	50 (443)	120 (1062)	8	
			15 (133)	38 (336)	95 (841)	10	
			44 (389)[5]	130 (1151)[5]	210 (1859)[5]	9	2
			44 (389)	120 (1062)[5]	260 (2301)[5]	12	
			44 (389)	110 (974)	230 (2036)	15	
			44 (389)	120 (1062)	260 (2301)	16	
			44 (389)	120 (1062)	260 (2301)	20	
			40 (354)	110 (974)	230 (2036)	25	
			44 (389)	120 (1062)	260 (2301)	32	
			40 (354)	110 (974)	230 (2036)	40	
			18 (159)	50 (443)	120 (1062)	64	
			44 (389)	110 (974)	260 (2301)	60	3
			44 (389)	120 (1062)	260 (2301)	80	
			44 (389)	120 (1062)	260 (2301)	100	
			44 (389)	110 (974)	230 (2036)	120	
			44 (389)	120 (1062)	260 (2301)	160	
			40 (354)	110 (974)	230 (2036)	200	
			44 (389)	120 (1062)	260 (2301)	256	
			40 (354)	110 (974)	230 (2036)	320	
			18 (159)	50 (443)	120 (1062)	512	
Max. output torque[4][6]	T_{2max}	Nm (lb_f.in)	22 (195)	64 (566)	128 (1133)	3	1
			30 (266)	85 (752)	168 (1487)	4	
			38 (336)	107 (947)	208 (1841)	5	
			40 (354)	104 (920)	216 (1912)	7	
			29 (257)	80 (708)	192 (1699)	8	
			24 (212)	61 (540)	152 (1345)	10	
			70 (620)	208 (1841)	336 (2974)	9	2
			70 (620)	192 (1699)	416 (3682)	12	
			70 (620)	176 (1558)	368 (3257)	15	
			70 (620)	192 (1699)	416 (3682)	16	
			70 (620)	192 (1699)	416 (3682)	20	
			64 (566)	176 (1558)	368 (3257)	25	
			70 (620)	192 (1699)	416 (3682)	32	
			64 (566)	176 (1558)	368 (3257)	40	
			29 (257)	80 (708)	192 (1699)	64	
			70 (620)	176 (1558)	416 (3682)	60	3
			70 (620)	192 (1699)	416 (3682)	80	
			70 (620)	192 (1699)	416 (3682)	100	
			70 (620)	176 (1558)	368 (3257)	120	
			70 (620)	192 (1699)	416 (3682)	160	
			64 (566)	176 (1558)	368 (3257)	200	
			70 (620)	192 (1699)	416 (3682)	256	
			64 (566)	176 (1558)	368 (3257)	320	
			29 (257)	80 (708)	192 (1699)	512	

(1) Ratios ($i=n_1/n_2$)
(2) Number of stages
(3) Application specific configuration with NCP – www.neugart.com
(4) Values for feather key (code "A"): for repeated load
(5) Different service life: 10,000 h at T_{2N}
(6) 30,000 rotations of the output shaft permitted; see page 166

Output torques			WPLQE060	WPLQE080	WPLQE120	i[1]	p[2]
Emergency stop torque[3]	T_{2Stop}	Nm (lb_f.in)	66 (584)	180 (1593)	360 (3186)	3	1
			86 (761)	240 (2124)	474 (4195)	4	
			80 (708)	220 (1947)	500 (4425)	5	
			80 (708)	178 (1575)	340 (3009)	7	
			80 (708)	190 (1682)	380 (3363)	8	
			70 (620)	170 (1505)	430 (3806)	10	
			88 (779)	260 (2301)	500 (4425)	9	2
			88 (779)	240 (2124)	520 (4602)	12	
			88 (779)	220 (1947)	500 (4425)	15	
			88 (779)	240 (2124)	520 (4602)	16	
			88 (779)	240 (2124)	520 (4602)	20	
			80 (708)	220 (1947)	500 (4425)	25	
			88 (779)	240 (2124)	520 (4602)	32	
			80 (708)	220 (1947)	500 (4425)	40	
			80 (708)	190 (1682)	380 (3363)	64	
			88 (779)	220 (1947)	520 (4602)	60	3
			88 (779)	240 (2124)	520 (4602)	80	
			88 (779)	240 (2124)	520 (4602)	100	
			88 (779)	220 (1947)	500 (4425)	120	
			88 (779)	240 (2124)	520 (4602)	160	
			80 (708)	220 (1947)	500 (4425)	200	
			88 (779)	240 (2124)	520 (4602)	256	
			80 (708)	220 (1947)	500 (4425)	320	
			80 (708)	190 (1682)	380 (3363)	512	

Input speeds			WPLQE060	WPLQE080	WPLQE120	i[1]	p[2]
Average thermal input speed at T_{2N} and S1[4][5]	n_{1N}	rpm	4500[6]	3100[6]	2850[6]	3	1
			4500[6]	3250[6]	2950[6]	4	
			4500[6]	3350[6]	3050[6]	5	
			4500	4000[6]	3500[6]	7	
			4500	4000[6]	3500[6]	8	
			4500	4000	3500	10	
			4500[6]	3150[6]	2950[6]	9	2
			4500[6]	3750[6]	3050[6]	12	
			4500	4000[6]	3500[6]	15	
			4500	4000[6]	3450[6]	16	
			4500	4000[6]	3500[6]	20	
			4500	4000	3500[6]	25	
			4500	4000	3500	32	
			4500	4000	3500	40	
			4500	4000	3500	64	
			4500	4000	3500	60	3
			4500	4000	3500	80	
			4500	4000	3500	100	
			4500	4000	3500	120	
			4500	4000	3500	160	
			4500	4000	3500	200	
			4500	4000	3500	256	
			4500	4000	3500	320	
			4500	4000	3500	512	
Max. mechanical input speed[4]	n_{1Limit}	rpm	13,000	7000	6500		

[1] Ratios ($i=n_1/n_2$)
[2] Number of stages
[3] Permitted 1000 times
[4] Application-specific speed configurations with NCP – www.neugart.com
[5] See page 166 for the definition
[6] Average thermal input speed at 50% T_{2N} and S1

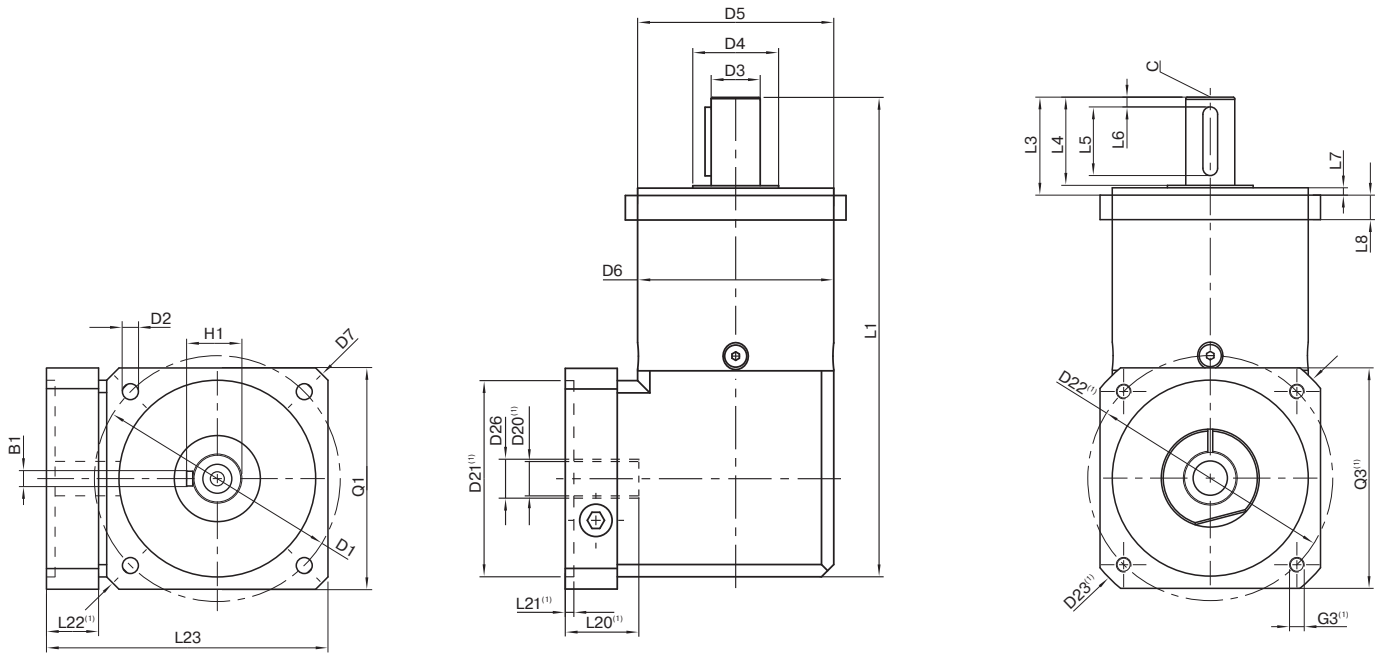

Drawing corresponds to a WPLQE080 / 1-stage / output shaft with feather key / 19 mm clamping system / motor adaptation – 2-part – square universal flange / B5 flange type motor

(1) The dimensions vary with the motor/gearbox flange. The input flange dimensions can be retrieved for each specific motor in Tec Data Finder at www.neugart.com

Geometry(2)			WPLQE060	WPLQE080	WPLQE120	p(3)	Code
Pitch circle diameter output	D1		75 (2.953)	100 (3.937)	130 (5.118)		
Mounting bore output	D2	4x	5.5 (0.217)	6.5 (0.256)	8.5 (0.335)		
Shaft diameter output	D3	h7	16 (0.630)	20 (0.787)	25 (0.984)		
Shaft collar output	D4		20 (0.787)	35 (1.378)	35 (1.378)		
Centering diameter output	D5	h7	60 (2.362)	80 (3.150)	110 (4.331)		
Housing diameter	D6		60 (2.362)	80 (3.150)	115 (4.528)		
Diagonal dimension output	D7		92 (3.622)	116 (4.567)	145 (5.709)		
Flange cross section output	Q1	■	70 (2.756)	90 (3.543)	115 (4.528)		
Total length	L1		152 (5.984)	195.5 (7.697)	274.5 (10.807)	1	
			164.5 (6.476)	213 (8.386)	302.5 (11.909)	2	
			177 (6.969)	230.5 (9.075)	330 (12.992)	3	
Shaft length output	L3		32 (1.260)	40 (1.575)	55 (2.165)		
Centering depth output	L7		3 (0.118)	3 (0.118)	4 (0.157)		
Flange thickness output	L8		10 (0.394)	10 (0.394)	15 (0.591)		
Min. overall height	L23		90,5 (3.563)	114,5 (4.508)	145,5 (5.728)		
Motor shaft diameter j6/k6	D20		More information on page 163/164				
Clamping system diameter input	D26						
Output shaft with feather key (DIN 6885-1)			A 5x5x20	A 6x6x28	A 8x7x40		A
Feather key width (DIN 6885-1)	B1		5 (0.197)	6 (0.236)	8 (0.315)		
Shaft height including feather key (DIN 6885-1)	H1		18 (0.709)	22.5 (0.886)	28 (1.102)		
Shaft length from shoulder	L4		28 (1.102)	36 (1.417)	50 (1.969)		
Feather key length	L5		20 (0.787)	28 (1.102)	40 (1.575)		
Distance from shaft end	L6		4 (0.157)	4 (0.157)	5 (0.197)		
Center hole (DIN 332, type DR)	C		M5x12.5	M6x16	M10x22		
Smooth output shaft							B
Shaft length from shoulder	L4		28 (1.102)	36 (1.417)	50 (1.969)		

(2) Dimensions in mm
(3) Number of stages



WPLPE

The economical right angle planetary gearbox for particularly high forces – flexible installation options and lifetime lubrication

The **WPLPE** is the sought-after angle solution from our Economy range: space-saving yet powerful at an attractive price. You attach your drive elements directly to the output shaft, which can also withstand high radial forces thanks to extra-strong deep groove ball bearings.

Nominal output torque	**5 - 195 Nm**
Radial force	**800 - 2500 N**
Axial force	**1000 - 4000 N**
Torsional backlash	**11 - 25 arcmin**
Protection class	**IP54**

Frame sizes

50 **70** **90** **120**

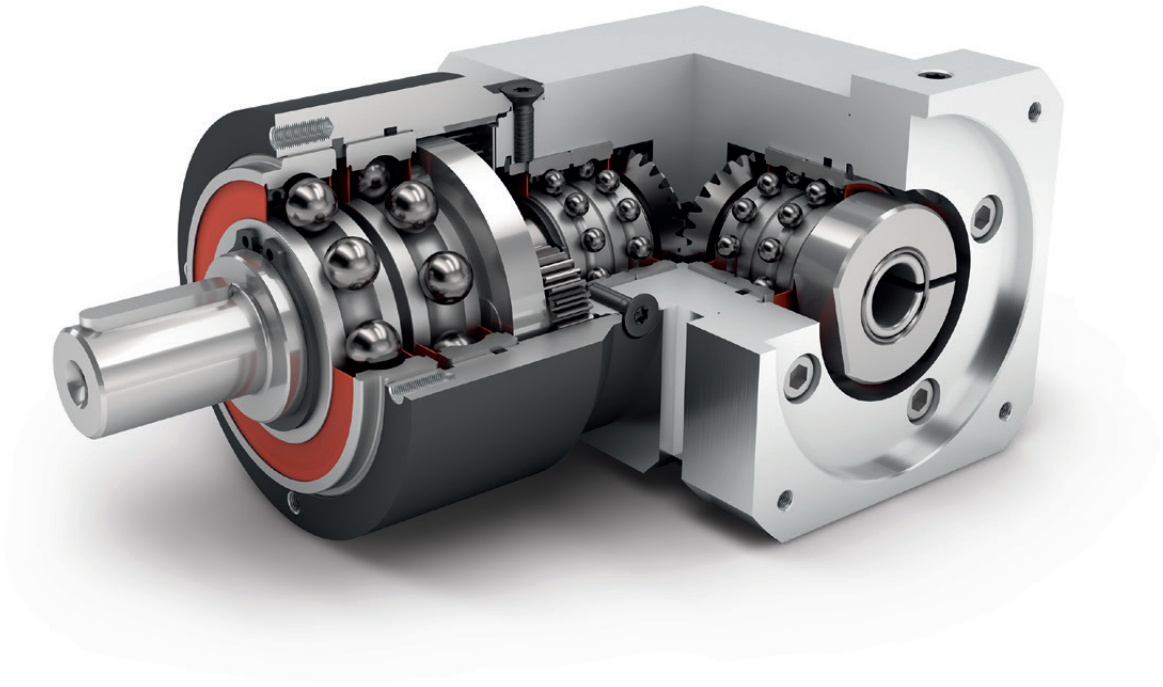

- Economy Line
- Equidirectional rotation
- Bevel gear right angle stage
- Reinforced deep groove ball bearings
- Right angle gearbox
- Spur gear
- Round type output flange
- Planet carrier in disc design

Detailed explanations of the technical features starting on page 173.

Code	Gearbox characteristics			WPLPE050	WPLPE070	WPLPE090	WPLPE120	p[1]
	Service life (L_{10h})	t_L	h	20,000				
	Service life at T_{2N} x 0,88			30,000				
	Efficiency at full load[2]	η	%	95				1
				94				2
	Min. operating temperature	T_{min}	°C (°F)	-25 (-13)				
	Max. operating temperature	T_{max}		90 (194)				
	Protection class			IP54				
S	Standard lubrication			Grease (lifetime lubrication)				
F	Food grade lubrication			Grease (lifetime lubrication)				
L	Low temperature lubrication[3]			Grease (lifetime lubrication)				
	Installation position			Any				
S	Standard backlash	j_t	arcmin	< 21	< 16	< 13	< 11	1
				< 25	< 18	< 15	< 13	2
	Torsional stiffness[2]	c_g	Nm /arcmin (lb_f.in/ arcmin)	0.5 - 0.8 (4 - 7)	2.2 - 4.1 (19 - 36)	4.7 - 10.8 (42 - 96)	13.1 - 28.0 (116 - 248)	1
				0.7 - 1.0 (6 - 9)	3.3 - 5.3 (29 - 47)	9.0 - 14.1 (80 - 125)	19.5 - 38.5 (173 - 341)	2
	Gearbox weight[2]	m_G	kg (lb_m)	0.8 (1.8)	2.1 - 2.2 (4.7 - 4.8)	4.8 - 4.9 (10.6 - 10.7)	11.5 - 11.6 (25.3 - 25.5)	1
				1.0 - 1.3 (2.2 - 2.9)	2.4 - 2.6 (5.3 - 5.7)	5.5 - 5.6 (12.0 - 12.3)	13.4 - 13.7 (29.5 - 30.2)	2
S	Standard surface			Housing: Steel – heat-treated and post-oxidized (black)				
	Running noise[4]	Q_g	dB(A)	68	70	73	75	
	Max. bending moment based on the gearbox input flange[5]	M_b	Nm (lb_f.in)	2 (18)	5 (44)	10.5 (93)	26 (230)	

Output shaft loads			WPLPE050	WPLPE070	WPLPE090	WPLPE120	p[1]
Radial force for 20,000 h[6][7]	$F_{r\ 20.000\ h}$	N (lb_f)	800 (180)	1050 (236)	1900 (427)	2500 (562)	
Axial force for 20,000 h[6][7]	$F_{a\ 20.000\ h}$		1000 (225)	1350 (303)	2000 (450)	4000 (899)	
Radial force for 30,000 h[6][7]	$F_{r\ 30.000\ h}$		700 (157)	900 (202)	1700 (382)	2150 (483)	
Axial force for 30,000 h[6][7]	$F_{a\ 30.000\ h}$		800 (180)	1000 (225)	1500 (337)	3000 (674)	
Maximum radial force[7][8]	$F_{r\ Stat}$		1300 (292)	1650 (371)	3100 (697)	4000 (899)	
Maximum axial force[7][8]	$F_{a\ Stat}$		1000 (225)	2100 (472)	3800 (854)	5900 (1326)	
Tilting moment for 20,000 h[6][8]	$M_{K\ 20.000\ h}$	Nm (lb_f.in)	26 (230)	42 (372)	99 (876)	168 (1487)	
Tilting moment for 30,000 h[6][8]	$M_{K\ 30.000\ h}$		22 (195)	36 (319)	89 (788)	144 (1275)	

Moment of inertia			WPLPE050	WPLPE070	WPLPE090	WPLPE120	p[1]
Mass moment of inertia[2]	J	kgcm² (lb_f.in.s²10⁻⁴)	0.032 - 0.052 (0.283 - 0.460)	0.213 - 0.324 (1.885 - 2.868)	0.877 - 1.361 (7.762 - 12.046)	2.686 - 4.073 (23.773 - 36.049)	1
			0.031 - 0.048 (0.274 - 0.425)	0.212 - 0.321 (1.876 - 2.841)	0.859 - 1.197 (7.603 - 10.594)	2.643 - 3.643 (23.393 - 32.243)	2

(1) Number of stages
(2) The ratio-dependent values can be retrieved in Tec Data Finder – www.neugart.com
(3) T_{min} = -40°C. Optimal operating temperature max. 50°C
(4) Sound pressure level from 1 m, measured on input running at n_1=3000 rpm no load; i=5
(5) Max. motor weight* in kg = 0.2 x M_b / motor length in m
* with symmetrically distributed motor weight
* with horizontal and stationary mounting
(6) These values are based on an output shaft speed of n_2=100 rpm
(7) Based on center of output shaft
(8) Other (sometimes higher) values following changes to T_{2N}, F_r, F_a, cycle, and service life of bearing. Application specific configuration with NCP – www.neugart.com

Output torques			WPLPE050	WPLPE070	WPLPE090	WPLPE120	i[1]	p[2]
Nominal output torque[3][4]	T_{2N}	Nm (lb_f.in)	4,5 (40)	14 (124)	40 (354)[5]	80 (708)[5]	3	1
			6 (53)	19 (168)	53 (469)[5]	105 (929)[5]	4	
			7,5 (66)	24 (212)	67 (593)[5]	130 (1151)[5]	5	
			8,5 (75)	25 (221)	65 (575)	135 (1195)	7	
			6 (53)	18 (159)	50 (443)	120 (1062)	8	
			5 (44)	15 (133)	38 (336)	95 (841)	10	
			12 (106)	33 (292)	97 (859)	157 (1390)	9	2
			15 (133)	33 (292)	90 (797)	195 (1726)	12	
			13 (115)	33 (292)	82 (726)	172 (1522)	15	
			15 (133)	33 (292)	90 (797)	195 (1726)	16	
			15 (133)	33 (292)	90 (797)	195 (1726)	20	
			13 (115)	30 (266)	82 (726)	172 (1522)	25	
			15 (133)	33 (292)	90 (797)	195 (1726)	32	
			13 (115)	30 (266)	82 (726)	172 (1522)	40	
			7,5 (66)	18 (159)	50 (443)	120 (1062)	64	
			5 (44)	15 (133)	38 (336)	95 (841)	100	
Max. output torque[4][6]	T_{2max}	Nm (lb_f.in)	7 (62)	22 (195)	64 (566)	128 (1133)	3	1
			10 (89)	30 (266)	85 (752)	168 (1487)	4	
			12 (106)	38 (336)	107 (947)	208 (1841)	5	
			13,5 (119)	40 (354)	104 (920)	216 (1912)	7	
			10 (89)	29 (257)	80 (708)	192 (1699)	8	
			8 (71)	24 (212)	61 (540)	152 (1345)	10	
			19 (168)	53 (469)	155 (1372)	251 (2222)	9	2
			24 (212)	53 (469)	144 (1275)	312 (2761)	12	
			21 (186)	53 (469)	131 (1159)	275 (2434)	15	
			24 (212)	53 (469)	144 (1275)	312 (2761)	16	
			24 (212)	53 (469)	144 (1275)	312 (2761)	20	
			21 (186)	48 (425)	131 (1159)	275 (2434)	25	
			24 (212)	53 (469)	144 (1275)	312 (2761)	32	
			21 (186)	48 (425)	131 (1159)	275 (2434)	40	
			12 (106)	29 (257)	80 (708)	192 (1699)	64	
			8 (71)	24 (212)	61 (540)	152 (1345)	100	

(1) Ratios ($i=n_1/n_2$)
(2) Number of stages
(3) Application specific configuration with NCP – www.neugart.com
(4) Values for feather key (code "A"): for repeated load
(5) Different service life: 10,000 h at T_{2N}
(6) 30,000 rotations of the output shaft permitted; see page 166

Output torques			WPLPE050	WPLPE070	WPLPE090	WPLPE120	i[1]	p[2]
Emergency stop torque[3]	T_{2Stop}	Nm (lb_f.in)	22,5 (199)	66 (584)	180 (1593)	360 (3186)	3	1
			28 (248)	86 (761)	240 (2124)	474 (4195)	4	
			35 (310)	80 (708)	220 (1947)	500 (4425)	5	
			26 (230)	80 (708)	178 (1575)	340 (3009)	7	
			27 (239)	80 (708)	190 (1682)	380 (3363)	8	
			25 (221)	70 (620)	170 (1505)	430 (3806)	10	
			33 (292)	88 (779)	260 (2301)	500 (4425)	9	2
			40 (354)	88 (779)	240 (2124)	520 (4602)	12	
			36 (319)	88 (779)	220 (1947)	500 (4425)	15	
			40 (354)	88 (779)	240 (2124)	520 (4602)	16	
			40 (354)	88 (779)	240 (2124)	520 (4602)	20	
			36 (319)	80 (708)	220 (1947)	500 (4425)	25	
			40 (354)	88 (779)	240 (2124)	520 (4602)	32	
			36 (319)	80 (708)	220 (1947)	500 (4425)	40	
			27 (239)	80 (708)	190 (1682)	380 (3363)	64	
			27 (239)	80 (708)	170 (1505)	430 (3806)	100	

Input speeds			WPLPE050	WPLPE070	WPLPE090	WPLPE120	i[1]	p[2]
Average thermal input speed at T_{2N} and S1[4][5]	n_{1N}	rpm	5000	4200[6]	3000[6]	2350[6]	3	1
			5000	4500[6]	3150[6]	2450[6]	4	
			5000	4500[6]	3250[6]	2600[6]	5	
			5000	4500[6]	3950[6]	3100[6]	7	
			5000	4500	4000[6]	3450[6]	8	
			5000	4500	4000	3500[6]	10	
			5000	4500[6]	3500[6]	2950[6]	9	2
			5000	4500	4000[6]	3050[6]	12	
			5000	4500	4000[6]	3450[6]	15	
			5000	4500	4000[6]	3450[6]	16	
			5000	4500	4000[6]	3500[6]	20	
			5000	4500	4000	3500[6]	25	
			5000	4500	4000	3500	32	
			5000	4500	4000	3500	40	
			5000	4500	4000	3500	64	
			5000	4500	4000	3500	100	
Max. mechanical input speed[4]	n_{1Limit}	rpm	18,000	13,000	7000	6500		

[1] Ratios ($i=n_1/n_2$)
[2] Number of stages
[3] Permitted 1000 times
[4] Application-specific speed configurations with NCP – www.neugart.com
[5] See page 166 for the definition
[6] Average thermal input speed at 50% T_{2N} and S1

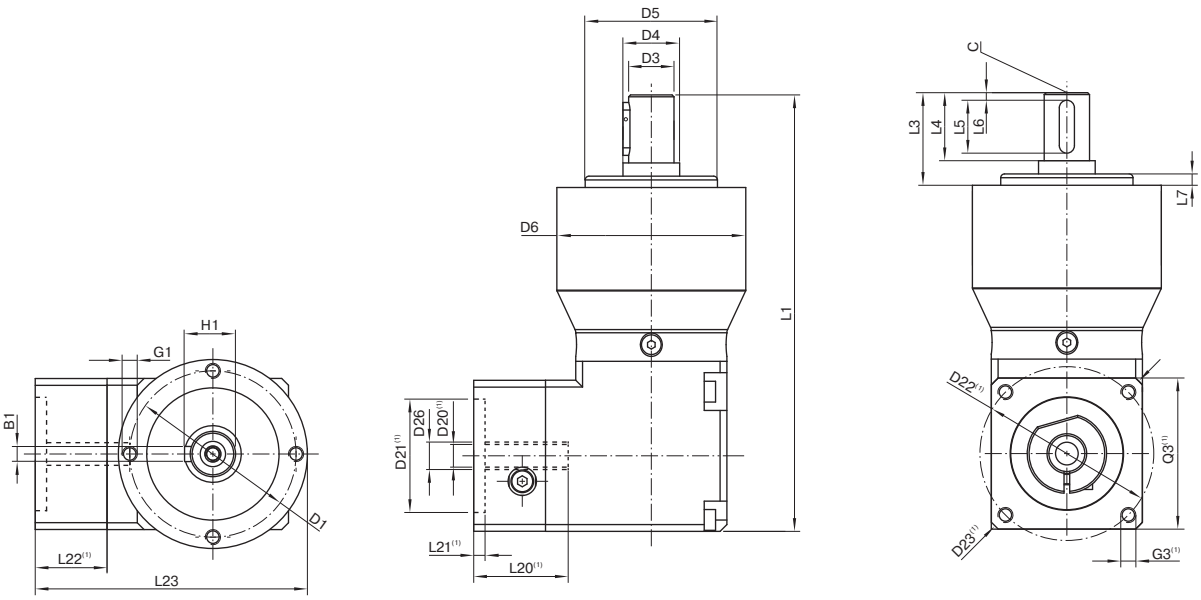

Drawing corresponds to a WPLPE090 / 1-stage / output shaft with feather key / 19 mm clamping system / motor adaptation – 2-part – square universal flange / B5 flange type motor

(1) The dimensions vary with the motor/gearbox flange. The input flange dimensions can be retrieved for each specific motor in Tec Data Finder at www.neugart.com

Geometry(2)			WPLPE050	WPLPE070	WPLPE090	WPLPE120	p(3)	Code
Pitch circle diameter output	D1		44 (1.732)	62 (2.441)	80 (3.150)	108 (4.252)		
Shaft diameter output	D3	k7	12 (0.472)	16 (0.630)	22 (0.866)	32 (1.260)		
Shaft collar output	D4		15 (0.591)	30 (1.181)	35 (1.378)	50 (1.969)		
Centering diameter output	D5	h7	35 (1.378)	52 (2.047)	68 (2.677)	90 (3.543)		
Housing diameter	D6		50 (1.969)	70 (2.756)	90 (3.543)	120 (4.724)		
Mounting thread x depth	G1	4x	M4x8	M5x8	M6x9	M8x20		
Total length	L1		115.5 (4.547)	152.5 (6.004)	197.5 (7.776)	265 (10.433)	1	
			128 (5.039)	165.5 (6.516)	215.5 (8.484)	292.5 (11.516)	2	
Shaft length output	L3		24.5 (0.965)	36 (1.417)	46 (1.811)	68 (2.677)		
Centering depth output	L7		3 (0.118)	3 (0.118)	4 (0.157)	5 (0.197)		
Min. overall height	L23		67 (2.638)	90,5 (3.563)	114,5 (4.508)	148 (5.827)		
Motor shaft diameter j6/k6	D20		More information on page 163/164					
Clamping system diameter input	D26							
Output shaft with feather key (DIN 6885-1)			A 4x4x14	A 5x5x25	A 6x6x32	A 10x8x50		A
Feather key width (DIN 6885-1)	B1		4 (0.157)	5 (0.197)	6 (0.236)	10 (0.394)		
Shaft height including feather key (DIN 6885-1)	H1		13.5 (0.531)	18 (0.709)	24.5 (0.965)	35 (1.378)		
Shaft length from shoulder	L4		18 (0.709)	28 (1.102)	36 (1.417)	58 (2.283)		
Feather key length	L5		14 (0.551)	25 (0.984)	32 (1.260)	50 (1.969)		
Distance from shaft end	L6		2 (0.079)	2 (0.079)	2 (0.079)	4 (0.157)		
Center hole (DIN 332, type DR)	C		M4x10	M5x12.5	M8x19	M12x28		
Smooth output shaft								B
Shaft length from shoulder	L4		18 (0.709)	28 (1.102)	36 (1.417)	58 (2.283)		

(2) Dimensions in mm
(3) Number of stages

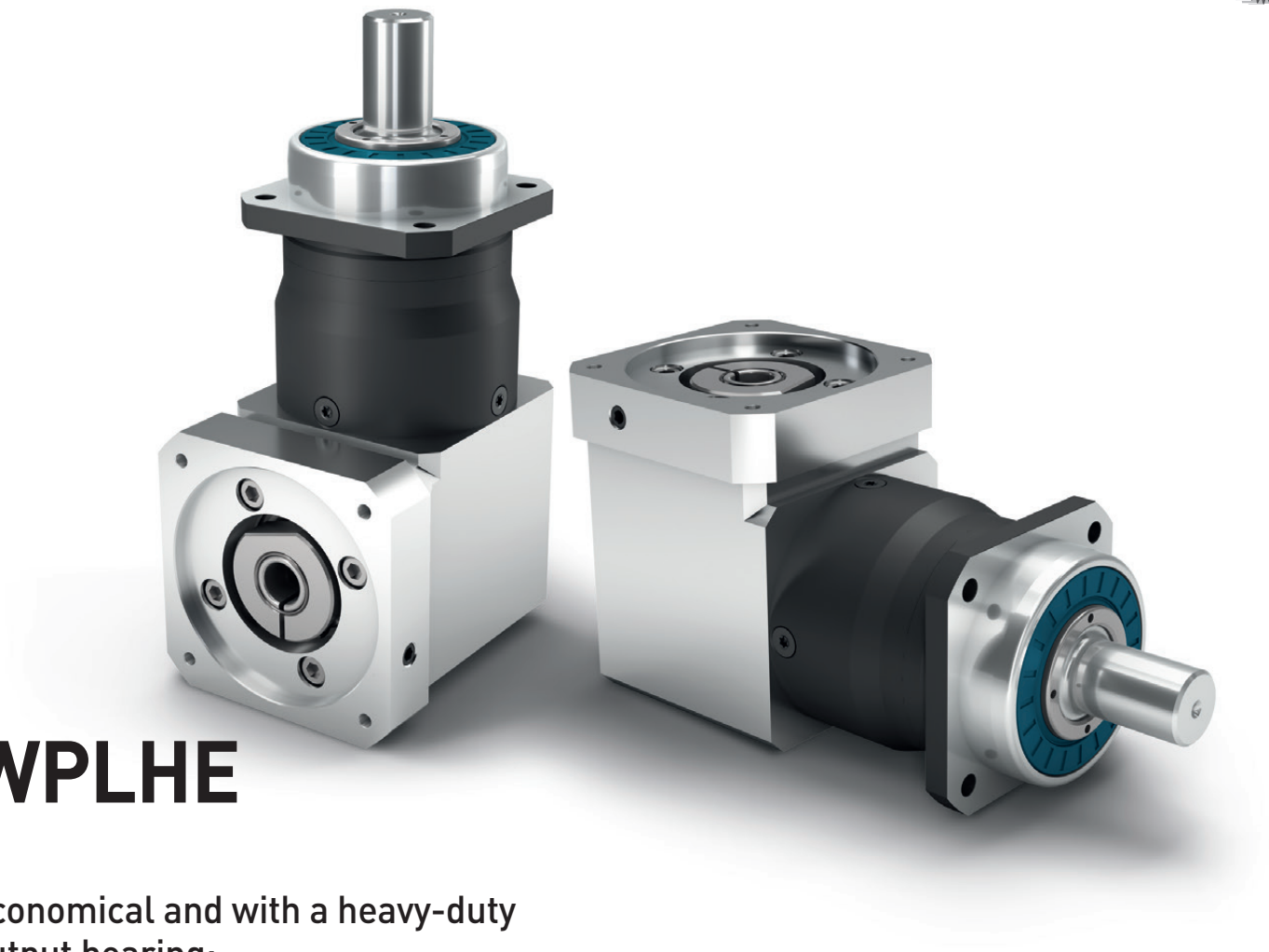

WPLHE

Economical and with a heavy-duty output bearing: The WPLHE right-angle gearbox

Axially space-saving, economical, IP65-compliant and designed for high radial and axial forces at the output: The **WPLHE** combines all the advantages of the successful PLHE, the world's first combination of the Economy and Precision gearboxes, as an right-angle variant.

Nominal output torque	**14 - 260 Nm**
Radial force	**3200 - 6000 N**
Axial force	**4400 - 8000 N**
Torsional backlash	**11 - 18 arcmin**
Protection class	**IP65**

Frame sizes

60 **80** **120**

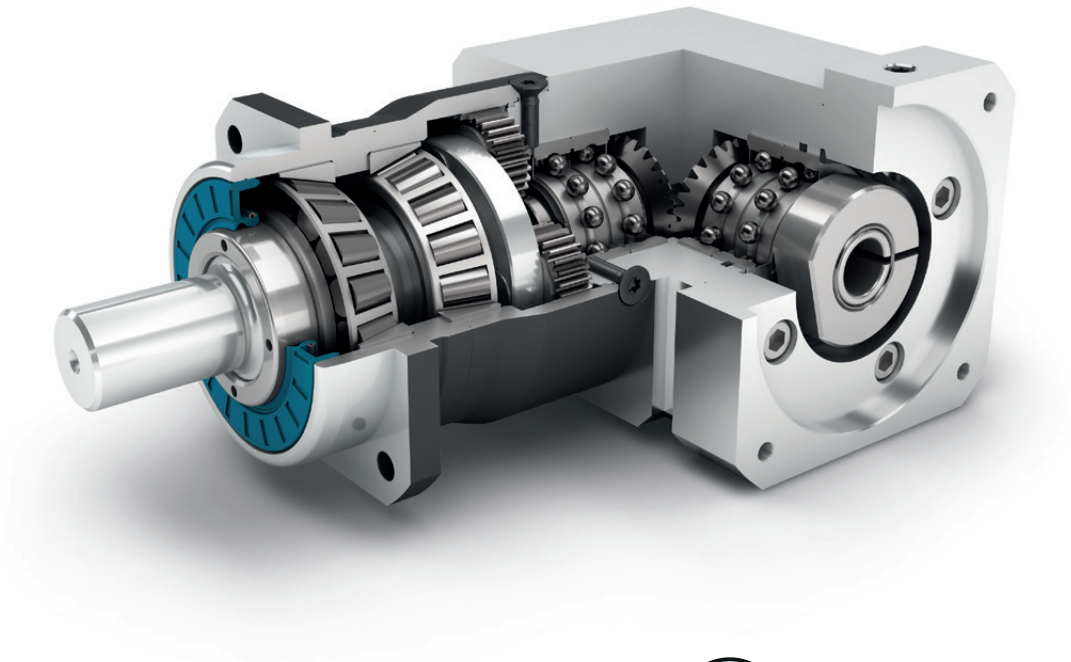

- Economy Line
- Equidirectional rotation
- Bevel gear right angle stage
- Preloaded tapered roller bearings
- Extra long centering collar
- Option: Splined output shaft (DIN 5480)
- Right angle gearbox
- Spur gear
- Square type output flange
- Rotary shaft seal
- Planet carrier in disc design
- Option: Planetary gearbox with mounted pinion on page 132

Detailed explanations of the technical features starting on page 173.

Code	Gearbox characteristics			WPLHE060	WPLHE080	WPLHE120	p(1)
	Service life (L_{10h})	t_L	h	20.000			
	Service life at T_{2N} x 0.88			30.000			
	Efficiency at full load(2)	η	%	94			
	Min. operating temperature	T_{min}	°C (°F)	-25 (-13)			
	Max. operating temperature	T_{max}		90 (194)			
	Protection class			IP65			
S	Standard lubrication			Grease (lifetime lubrication)			
F	Food grade lubrication			Grease (lifetime lubrication)			
L	Low temperature lubrication(3)			Grease (lifetime lubrication)			
	Installation position			Any			
S	Standard backlash	j_t	arcmin	< 16	< 13	< 11	1
				< 18	< 15	< 13	2
	Torsional stiffness(2)	c_g	Nm /arcmin (lb_f.in/ arcmin)	1.8 - 3.4 (16 - 30)	4.1 - 9.0 (36 - 80)	11.2 - 20.5 (99 - 181)	1
				2.5 - 4.5 (22 - 40)	7.3 - 12.1 (65 - 107)	16.7 - 27.0 (148 - 239)	2
	Gearbox weight(2)	m_G	kg (lb_m)	2.3 (5.0 - 5.1)	4.6 (10.1)	10.9 - 11.0 (23.9 - 24.2)	1
				2.5 (5.4 - 5.5)	5.1 (11.1 - 11.3)	12.5 - 12.8 (27.6 - 28.3)	2
S	Standard surface			Housing: Steel – heat-treated and post-oxidized (black)			
	Running noise(4)	Q_g	dB(A)	70	73	75	
	Max. bending moment based on the gearbox input flange(5)	M_b	Nm (lb_f.in)	5 (44)	10.5 (93)	26 (230)	

Output shaft loads			WPLHE060	WPLHE080	WPLHE120	p(1)
Radial force for 20,000 h(6)(7)	$F_{r\ 20.000\ h}$	N (lb_f)	3200 (719)	5500 (1236)	6000 (1349)	
Axial force for 20,000 h(6)(7)	$F_{a\ 20.000\ h}$		4400 (989)	6400 (1439)	8000 (1798)	
Radial force for 30,000 h(6)(7)	$F_{r\ 30.000\ h}$		3200 (719)	4800 (1079)	5400 (1214)	
Axial force for 30,000 h(6)(7)	$F_{a\ 30.000\ h}$		3900 (877)	5700 (1281)	7000 (1574)	
Maximum radial force(7)(8)	$F_{r\ Stat}$		3200 (719)	5500 (1236)	6000 (1349)	
Maximum axial force(7)(8)	$F_{a\ Stat}$		4400 (989)	6400 (1439)	8000 (1798)	
Tilting moment for 20,000 h(6)(8)	$M_{K\ 20.000\ h}$	Nm (lb_f.in)	191 (1690)	383 (3393)	488 (4317)	
Tilting moment for 30,000 h(6)(8)	$M_{K\ 30.000\ h}$		191 (1690)	335 (2965)	439 (3885)	

Moment of inertia			WPLHE060	WPLHE080	WPLHE120	p(1)
Mass moment of inertia(2)	J	kgcm² (lb_f.in.s²10⁻⁴)	0.225 - 0.406 (1.991 - 3.593)	0.921 - 1.394 (8.152 - 12.338)	1.832 - 2.970 (16.215 - 26.287)	1
			0.220 - 0.355 (1.947 - 3.142)	0.906 - 1.246 (8.019 - 11.028)	1.818 - 2.787 (16.091 - 24.667)	2

(1) Number of stages
(2) The ratio-dependent values can be retrieved in Tec Data Finder – www.neugart.com
(3) T_{min} = -40°C. Optimal operating temperature max. 50°C
(4) Sound pressure level from 1 m, measured on input running at n_1=3000 rpm no load; i=5
(5) Max. motor weight* in kg = 0.2 x M_b / motor length in m
* with symmetrically distributed motor weight
* with horizontal and stationary mounting
(6) These values are based on an output shaft speed of n_2=100 rpm
(7) Based on center of output shaft
(8) Other (sometimes higher) values following changes to T_{2N}, F_r, F_a, cycle, and service life of bearing. Application specific configuration with NCP – www.neugart.com

Output torques			WPLHE060	WPLHE080	WPLHE120	i[1]	p[2]
Nominal output torque[3][4]	T_{2N}	Nm (lb_f.in)	14 (124)	40 (354)[5]	80 (708)[5]	3	1
			19 (168)	53 (469)[5]	105 (929)[5]	4	
			24 (212)	67 (593)[5]	130 (1151)[5]	5	
			25 (221)	65 (575)	135 (1195)	7	
			18 (159)	50 (443)	120 (1062)	8	
			15 (133)	38 (336)	95 (841)	10	
			44 (389)[5]	130 (1151)[5]	210 (1859)[5]	9	2
			44 (389)	120 (1062)[5]	260 (2301)[5]	12	
			44 (389)	110 (974)	230 (2036)	15	
			44 (389)	120 (1062)	260 (2301)	16	
			44 (389)	120 (1062)	260 (2301)	20	
			40 (354)	110 (974)	230 (2036)	25	
			44 (389)	120 (1062)	260 (2301)	32	
			40 (354)	110 (974)	230 (2036)	40	
			18 (159)	50 (443)	120 (1062)	64	
			15 (133)	38 (336)	95 (841)	100	
Max. output torque[4][6]	T_{2max}	Nm (lb_f.in)	22 (195)	64 (566)	128 (1133)	3	1
			30 (266)	85 (752)	168 (1487)	4	
			38 (336)	107 (947)	208 (1841)	5	
			40 (354)	104 (920)	216 (1912)	7	
			29 (257)	80 (708)	192 (1699)	8	
			24 (212)	61 (540)	152 (1345)	10	
			70 (620)	208 (1841)	336 (2974)	9	2
			70 (620)	192 (1699)	416 (3682)	12	
			70 (620)	176 (1558)	368 (3257)	15	
			70 (620)	192 (1699)	416 (3682)	16	
			70 (620)	192 (1699)	416 (3682)	20	
			64 (566)	176 (1558)	368 (3257)	25	
			70 (620)	192 (1699)	416 (3682)	32	
			64 (566)	176 (1558)	368 (3257)	40	
			29 (257)	80 (708)	192 (1699)	64	
			24 (212)	61 (540)	152 (1345)	100	

(1) Ratios ($i=n_1/n_2$)
(2) Number of stages
(3) Application specific configuration with NCP – www.neugart.com
(4) Values for feather key (code "A"): for repeated load
(5) Different service life: 10,000 h at T_{2N}
(6) 30,000 rotations of the output shaft permitted; see page 166

Output torques			WPLHE060	WPLHE080	WPLHE120	i[1]	p[2]
Emergency stop torque[3]	T_{2Stop}	Nm (lb_f.in)	66 (584)	180 (1593)	360 (3186)	3	1
			86 (761)	240 (2124)	474 (4195)	4	
			80 (708)	220 (1947)	500 (4425)	5	
			80 (708)	178 (1575)	340 (3009)	7	
			80 (708)	190 (1682)	380 (3363)	8	
			70 (620)	170 (1505)	430 (3806)	10	
			88 (779)	260 (2301)	500 (4425)	9	2
			88 (779)	240 (2124)	520 (4602)	12	
			88 (779)	220 (1947)	500 (4425)	15	
			88 (779)	240 (2124)	520 (4602)	16	
			88 (779)	240 (2124)	520 (4602)	20	
			80 (708)	220 (1947)	500 (4425)	25	
			88 (779)	240 (2124)	520 (4602)	32	
			80 (708)	220 (1947)	500 (4425)	40	
			80 (708)	190 (1682)	380 (3363)	64	
			80 (708)	200 (1770)	430 (3806)	100	

Input speeds			WPLHE060	WPLHE080	WPLHE120	i[1]	p[2]
Average thermal input speed at T_{2N} and S1[4][5]	n_{1N}	rpm	2650[6]	2050[6]	2300[6]	3	1
			3100[6]	2300[6]	2500[6]	4	
			3450[6]	2450[6]	2700[6]	5	
			4250[6]	3100[6]	3300[6]	7	
			4500[6]	3550[6]	3500[6]	8	
			4500	4000[6]	3500	10	
			3300[6]	2400[6]	2500[6]	9	2
			3800[6]	2850[6]	2600[6]	12	
			4450[6]	3250[6]	3000[6]	15	
			4500[6]	3250[6]	3000[6]	16	
			4500[6]	3650[6]	3400[6]	20	
			4500	4000[6]	3500[6]	25	
			4500	4000[6]	3500[6]	32	
			4500	4000	3500	40	
			4500	4000	3500	64	
			4500	4000	3500	100	
Max. mechanical input speed[4]	n_{1Limit}	rpm	13,000	7000	6500		

(1) Ratios ($i=n_1/n_2$)
(2) Number of stages
(3) Permitted 1000 times
(4) Application-specific speed configurations with NCP – www.neugart.com
(5) See page 166 for the definition
(6) Average thermal input speed at 50% T_{2N} and S1

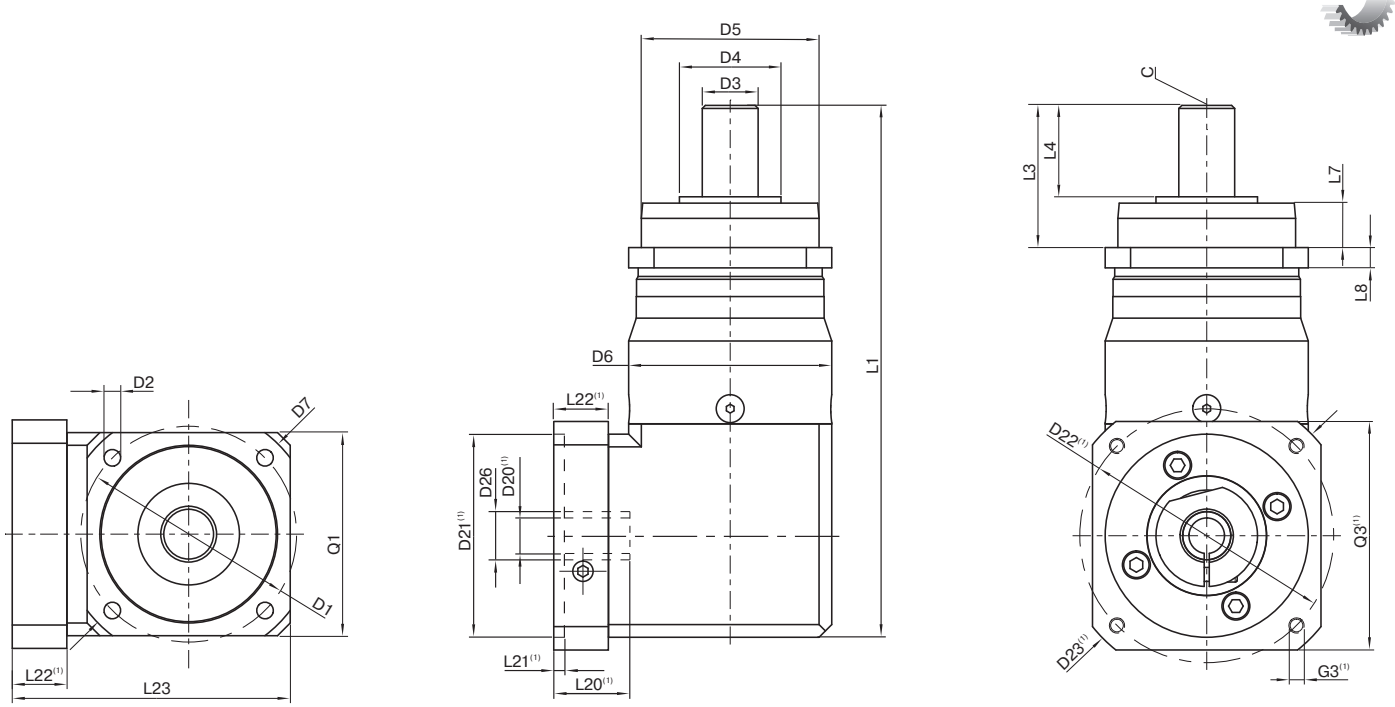

Drawing corresponds to a WPLHE080 / 1-stage / smooth output shaft / 19 mm clamping system / motor adaptation – 2-part – square universal flange / B5 flange type motor

(1) The dimensions vary with the motor/gearbox flange. The input flange dimensions can be retrieved for each specific motor in Tec Data Finder at www.neugart.com

Geometry(2)			**WPLHE060**	**WPLHE080**	**WPLHE120**	**p**(3)	**Code**
Pitch circle diameter output	D1		68 (2.677) - 75 (2.953)	85 (3.346)	120 (4.724)		
Mounting bore output	D2	4x	5.5 (0.217)	6.5 (0.256)	9.0 (0.354)		
Shaft diameter output	D3	k7	16 (0.630)	22 (0.866)	32 (1.260)		
Shaft collar output	D4		35 (1.378)	40 (1.575)	45 (1.772)		
Centering diameter output	D5	h7	60 (2.362)	70 (2.756)	90 (3.543)		
Housing diameter	D6		60 (2.362)	80 (3.150)	115 (4.528)		
Diagonal dimension output	D7		92 (3.622)	100 (3.937)	140 (5.512)		
Flange cross section output	Q1	■	70 (2.756)	80 (3.150)	110 (4.331)		
Total length	L1		168 (6.614)	209.5 (8.248)	272.5 (10.728)	1	
			180.5 (7.106)	227.5 (8.957)	300 (11.811)	2	
Shaft length output	L3		48 (1.890)	56 (2.205)	88 (3.465)		
Centering depth output	L7		19 (0.748)	18 (0.689)	28 (1.102)		
Flange thickness output	L8		7 (0.276)	8 (0.315)	10 (0.394)		
Min. overall height	L23		90.5 (3.563)	109.5 (4.311)	145.5 (5.728)		
Motor shaft diameter j6/k6	D20		More information on page 163/164				
Clamping system diameter input	D26						
Output shaft with feather key (DIN 6885-1)			A 5x5x25	A 6x6x28	A 10x8x50		
Feather key width (DIN 6885-1)	B1		5 (0.197)	6 (0.236)	10 (0.394)		
Shaft height including feather key (DIN 6885-1)	H1		18 (0.709)	24.5 (0.965)	35 (1.378)		**A**
Shaft length from shoulder	L4		28 (1.102)	36 (1.417)	58 (2.283)		
Feather key length	L5		25 (0.984)	28 (1.102)	50 (1.969)		
Distance from shaft end	L6		2 (0.079)	4 (0.157)	4 (0.157)		
Center hole (DIN 332, type DR)	C		M5x12.5	M8x19	M12x28		
Smooth output shaft							
Shaft length from shoulder	L4		28 (1.102)	36 (1.417)	58 (2.283)		**B**
Splined output shaft (DIN 5480)			W16x0.8x18x6m	W22x1.25x16x6m	W32x1.25x24x6m		
Width of gearing	L_v		15 (0.591)				
Shaft length output	L3		48 (1.890)	56 (2.205)	88 (3.465)		**C**
Shaft length from shoulder	L4		26 (1.024)	26 (1.024)	26 (1.024)		
Center hole (DIN 332, type DR)	C		M5x12.5	M8x19	M12x28		

(2) Dimensions in mm
(3) Number of stages

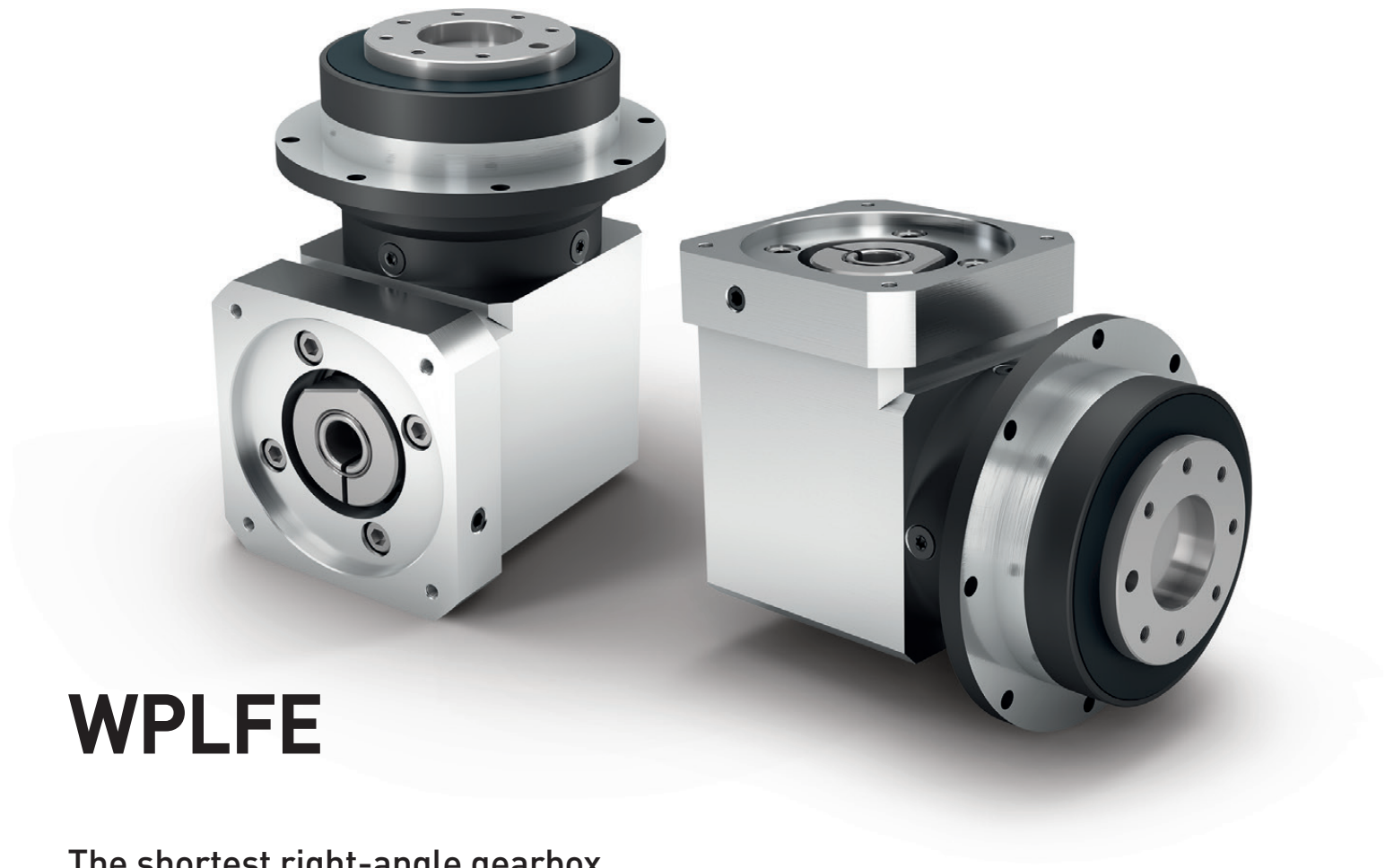

WPLFE

The shortest right-angle gearbox with flange output shaft and high torsional stiffness

The **WPLFE** is our right-angle planetary gearbox with a compact flange output shaft. You save up to a third of the space. Its standardized flange interface makes it particularly easy to install. The integrated dowel pin drill hole provides additional stability during installation.

Nominal output torque	**14 - 260 Nm**
Radial force	**550 - 2400 N**
Axial force	**1200 - 3300 N**
Torsional backlash	**11 - 18 arcmin**
Protection class	**IP54**

Frame sizes

64 **90** **110**

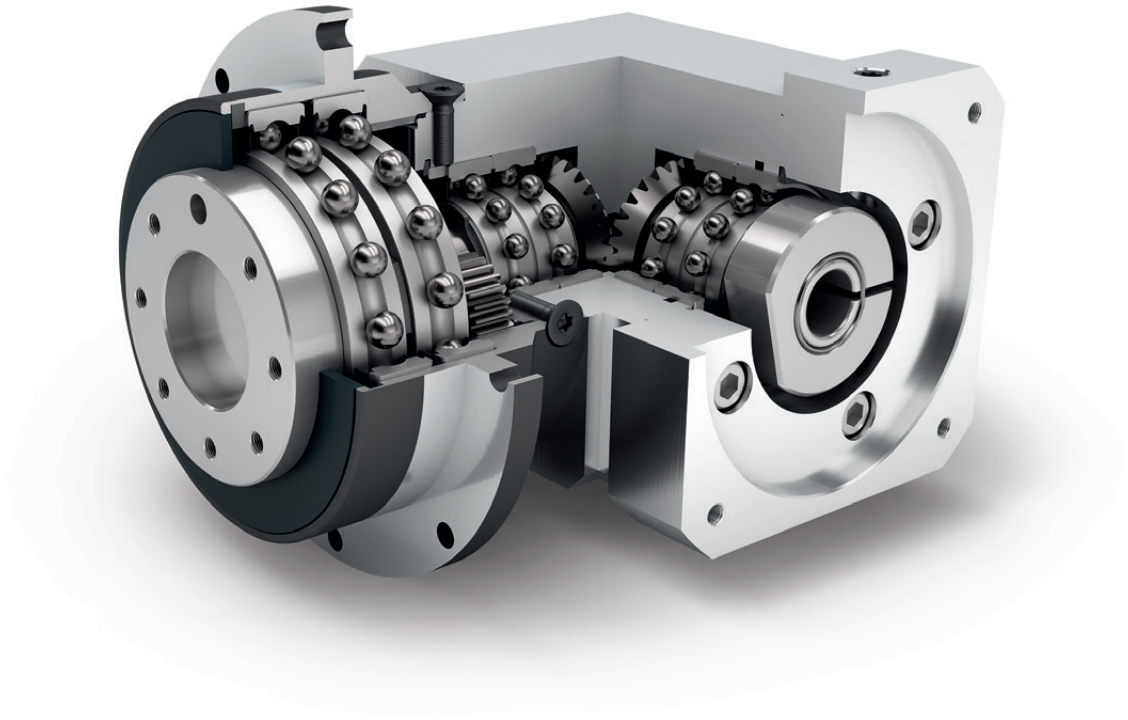

- Economy Line
- Right angle gearbox
- Spur gear
- Extra large round type output flange
- Flange output shaft (ISO 9409-1)
- Equidirectional rotation
- Bevel gear right angle stage
- Low-friction deep groove ball bearings
- Planet carrier in disc design

Detailed explanations of the technical features starting on page 173.

Code	Gearbox characteristics			WPLFE064	WPLFE090	WPLFE110	p(1)
	Service life (L_{10h})	t_L	h	20,000			
	Service life at T_{2N} x 0,88			30,000			
	Efficiency at full load(2)	η	%	94			1
				93			2
	Min. operating temperature	T_{min}	°C (°F)	-25 (-13)			
	Max. operating temperature	T_{max}		90 (194)			
	Protection class			IP54			
S	Standard lubrication			Grease (lifetime lubrication)			
F	Food grade lubrication			Grease (lifetime lubrication)			
L	Low temperature lubrication(3)			Grease (lifetime lubrication)			
	Installation position			Any			
S	Standard backlash	j_t	arcmin	< 16	< 13	< 11	1
				< 18	< 15	< 13	2
	Torsional stiffness(2)	c_g	Nm /arcmin (lb_f.in/ arcmin)	2.9 - 6.2 (26 - 55)	5.8 - 17.5 (51 - 155)	15.9 - 40.5 (141 - 358)	1
				4.9 - 9.9 (43 - 88)	14.3 - 29.5 (127 - 261)	26.0 - 69.0 (230 - 611)	2
	Gearbox weight(2)	m_G	kg (lb_m)	1.8 (4.0)	4.5 - 4.6 (10.0 - 10.1)	10.5 - 10.6 (23.1 - 23.3)	1
				2.0 - 2.1 (4.4 - 4.7)	5.0 - 5.3 (11.0 - 11.6)	12.2 - 12.5 (26.9 - 27.6)	2
S	Standard surface			Housing: Steel – heat-treated and post-oxidized (black)			
	Running noise(4)	Q_g	dB(A)	70	73	75	
	Max. bending moment based on the gearbox input flange(5)	M_b	Nm (lb_f.in)	5 (44)	10.5 (93)	26 (230)	

Output shaft loads			WPLFE064	WPLFE090	WPLFE110	p(1)
Radial force for 20,000 h(6)(7)	$F_{r\,20.000\,h}$	N (lb_f)	550 (124)	1400 (315)	2400 (540)	
Axial force for 20,000 h(6)(7)	$F_{a\,20.000\,h}$		1200 (270)	3000 (674)	3300 (742)	
Radial force for 30,000 h(6)(7)	$F_{r\,30.000\,h}$		500 (112)	1200 (270)	2100 (472)	
Axial force for 30,000 h(6)(7)	$F_{a\,30.000\,h}$		1200 (270)	3000 (674)	3300 (742)	
Maximum radial force(7)(8)	$F_{r\,Stat}$		900 (202)	2200 (495)	3800 (854)	
Maximum axial force(7)(8)	$F_{a\,Stat}$		1200 (270)	3300 (742)	5200 (1169)	
Tilting moment for 20,000 h(6)(8)	$M_{K\,20.000\,h}$	Nm (lb_f.in)	12 (106)	46 (407)	109 (965)	
Tilting moment for 30,000 h(6)(8)	$M_{K\,30.000\,h}$		11 (97)	40 (354)	96 (850)	

Moment of inertia			WPLFE064	WPLFE090	WPLFE110	p(1)
Mass moment of inertia(2)	J	$kgcm^2$ ($lb_f.in.s^2 10^{-4}$)	0.222 - 0.433 (1.965 - 3.832)	0.909 - 1.735 (8.045 - 15.356)	2.751 - 4.739 (24.348 - 41.944)	1
			0.214 - 0.353 (1.894 - 3.124)	0.861 - 1.238 (7.620 - 10.957)	2.644 - 3.716 (23.401 - 32.889)	2

(1) Number of stages
(2) The ratio-dependent values can be retrieved in Tec Data Finder – www.neugart.com
(3) T_{min} = -40°C. Optimal operating temperature max. 50°C
(4) Sound pressure level from 1 m, measured on input running at n_1=3000 rpm no load; i=5
(5) Max. motor weight* in kg = 0.2 x M_b / motor length in m
* with symmetrically distributed motor weight
* with horizontal and stationary mounting
(6) These values are based on an output shaft speed of n_2=100 rpm
(7) Based on the end of the output shaft
(8) Other (sometimes higher) values following changes to T_{2N}, F_r, F_a, cycle, and service life of bearing. Application specific configuration with NCP – www.neugart.com

Output torques			WPLFE064	WPLFE090	WPLFE110	i[1]	p[2]
Nominal output torque[3]	T_{2N}	Nm (lb_f.in)	14 (124)	40 (354)[4]	80 (708)[4]	3	1
			19 (168)	53 (469)[4]	105 (929)[4]	4	
			24 (212)	67 (593)[4]	130 (1151)[4]	5	
			25 (221)	65 (575)	135 (1195)	7	
			18 (159)	50 (443)	120 (1062)	8	
			15 (133)	38 (336)	95 (841)	10	
			44 (389)[4]	130 (1151)[4]	210 (1859)[4]	9	2
			44 (389)	120 (1062)[4]	260 (2301)[4]	12	
			44 (389)	110 (974)	230 (2036)	15	
			44 (389)	120 (1062)	260 (2301)	16	
			44 (389)	120 (1062)	260 (2301)	20	
			40 (354)	110 (974)	230 (2036)	25	
			44 (389)	120 (1062)	260 (2301)	32	
			40 (354)	110 (974)	230 (2036)	40	
			18 (159)	50 (443)	120 (1062)	64	
			15 (133)	38 (336)	95 (841)	100	
Max. output torque[5]	T_{2max}	Nm (lb_f.in)	22 (195)	64 (566)	128 (1133)	3	1
			30 (266)	85 (752)	168 (1487)	4	
			38 (336)	107 (947)	208 (1841)	5	
			40 (354)	104 (920)	216 (1912)	7	
			29 (257)	80 (708)	192 (1699)	8	
			24 (212)	61 (540)	152 (1345)	10	
			70 (620)	208 (1841)	336 (2974)	9	2
			70 (620)	192 (1699)	416 (3682)	12	
			70 (620)	176 (1558)	368 (3257)	15	
			70 (620)	192 (1699)	416 (3682)	16	
			70 (620)	192 (1699)	416 (3682)	20	
			64 (566)	176 (1558)	368 (3257)	25	
			70 (620)	192 (1699)	416 (3682)	32	
			64 (566)	176 (1558)	368 (3257)	40	
			29 (257)	80 (708)	192 (1699)	64	
			24 (212)	61 (540)	152 (1345)	100	

(1) Ratios ($i=n_1/n_2$)
(2) Number of stages
(3) Application specific configuration with NCP – www.neugart.com
(4) Different service life: 10,000 h at T_{2N}
(5) 30,000 rotations of the output shaft permitted; see page 166

Output torques			WPLFE064	WPLFE090	WPLFE110	i[1]	p[2]
Emergency stop torque[3]	T_{2Stop}	Nm (lb_f.in)	66 (584)	180 (1593)	360 (3186)	3	1
			86 (761)	240 (2124)	474 (4195)	4	
			80 (708)	220 (1947)	500 (4425)	5	
			80 (708)	178 (1575)	340 (3009)	7	
			80 (708)	190 (1682)	380 (3363)	8	
			70 (620)	170 (1505)	430 (3806)	10	
			88 (779)	260 (2301)	500 (4425)	9	2
			88 (779)	240 (2124)	520 (4602)	12	
			88 (779)	220 (1947)	500 (4425)	15	
			88 (779)	240 (2124)	520 (4602)	16	
			88 (779)	240 (2124)	520 (4602)	20	
			80 (708)	220 (1947)	500 (4425)	25	
			88 (779)	240 (2124)	520 (4602)	32	
			80 (708)	220 (1947)	500 (4425)	40	
			80 (708)	190 (1682)	380 (3363)	64	
			80 (708)	200 (1770)	430 (3806)	100	

Input speeds			WPLFE064	WPLFE090	WPLFE110	i[1]	p[2]
Average thermal input speed at T_{2N} and S1[4][5]	n_{1N}	rpm	4000[6]	2800[6]	2200[6]	3	1
			4400[6]	3000[6]	2400[6]	4	
			4500[6]	3200[6]	2600[6]	5	
			4500[6]	4000[6]	3000[6]	7	
			4500	4000[6]	3300[6]	8	
			4500	4000	3500[6]	10	
			4300[6]	2900[6]	2400[6]	9	2
			4500[6]	3400[6]	2600[6]	12	
			4500[6]	3800[6]	3100[6]	15	
			4500[6]	3800[6]	3000[6]	16	
			4500	4000[6]	3400[6]	20	
			4500	4000[6]	3500[6]	25	
			4500	4000	3500[6]	32	
			4500	4000	3500	40	
			4500	4000	3500	64	
			4500	4000	3500	100	
Max. mechanical input speed[4]	n_{1Limit}	rpm	13,000	7000	6500		

[1] Ratios ($i=n_1/n_2$)
[2] Number of stages
[3] Permitted 1000 times
[4] Application-specific speed configurations with NCP – www.neugart.com
[5] See page 166 for the definition
[6] Average thermal input speed at 50% T_{2N} and S1

WPLFE064
WPLFE090

WPLFE110

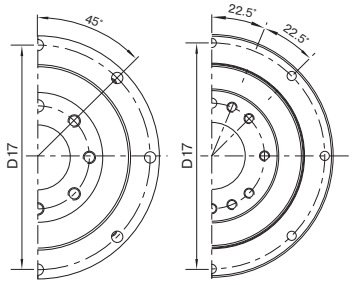

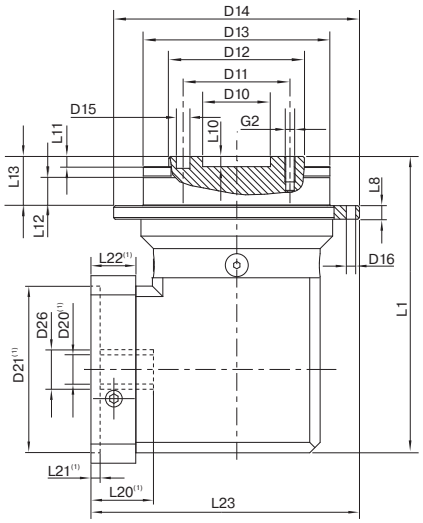

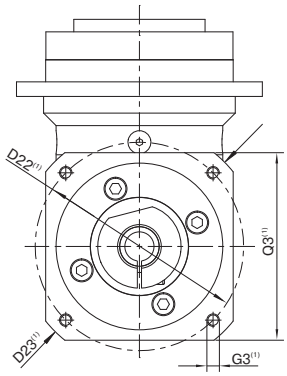

Drawing corresponds to a WPLFE090 / 1-stage / flange output shaft with dowel hole / 19 mm clamping system / motor adaptation – 2-part – square universal flange / B5 flange type motor

(1) The dimensions vary with the motor/gearbox flange. The input flange dimensions can be retrieved for each specific motor in Tec Data Finder at www.neugart.com

Geometry(2)			**WPLFE064**	**WPLFE090**	**WPLFE110**	**p**(3)	**Code**
Centering diameter output shaft	D10	H7	20 (0.787)	31.5 (1.240)	40 (1.575)		
Pitch circle diameter output shaft	D11		31.5 (1.240)	50 (1.969)	63 (2.480)		
Flange output shaft diameter	D12	h7	40 (1.575)	63 (2.480)	80 (3.150)		
Centering diameter output flange	D13		64 (2.520)	90 (3.543)	110 (4.331)		
Flange diameter output	D14		86 (3.386)	118 (4.646)	145 (5.709)		
Mounting bore output	D16		4.5 8x45°	5.5 8x45°	5.5 8x45°		
Pitch circle diameter output flange	D17		79 (3.110)	109 (4.291)	135 (5.315)		
Total length	L1		110 (4.331)	149 (5.866)	198.5 (7.815)	1	
			122.5 (4.823)	165.5 (6.516)	225.5 (8.878)	2	
Flange thickness output	L8		4 (0.157)	7 (0.276)	8 (0.315)		
Centering depth output shaft	L10		4 (0.157)	6 (0.236)	6 (0.236)		
	L11		3 (0.118)	6 (0.236)	6 (0.236)		
Centering depth output flange	L12		7.5 (0.295)	10.5 (0.413)	10.5 (0.413)		
Output flange length	L13		19.5 (0.768)	30.0 (1.181)	29.0 (1.142)		
Min. overall height	L23		98,5 (3.878)	129 (5.079)	160,5 (6.319)		
Motor shaft diameter j6/k6	D20		More information on page 163/164				
Clamping system diameter input	D26						
Flange output shaft with dowel hole (ISO 9409-1)							**E**
Dowel hole x depth	D15	H7	5x6	6x7	6x7		
Number x thread x depth	G2		7 x M5x7	7 x M6x10	11 x M6x12		

(2) Dimensions in mm (in)
(3) Number of stages

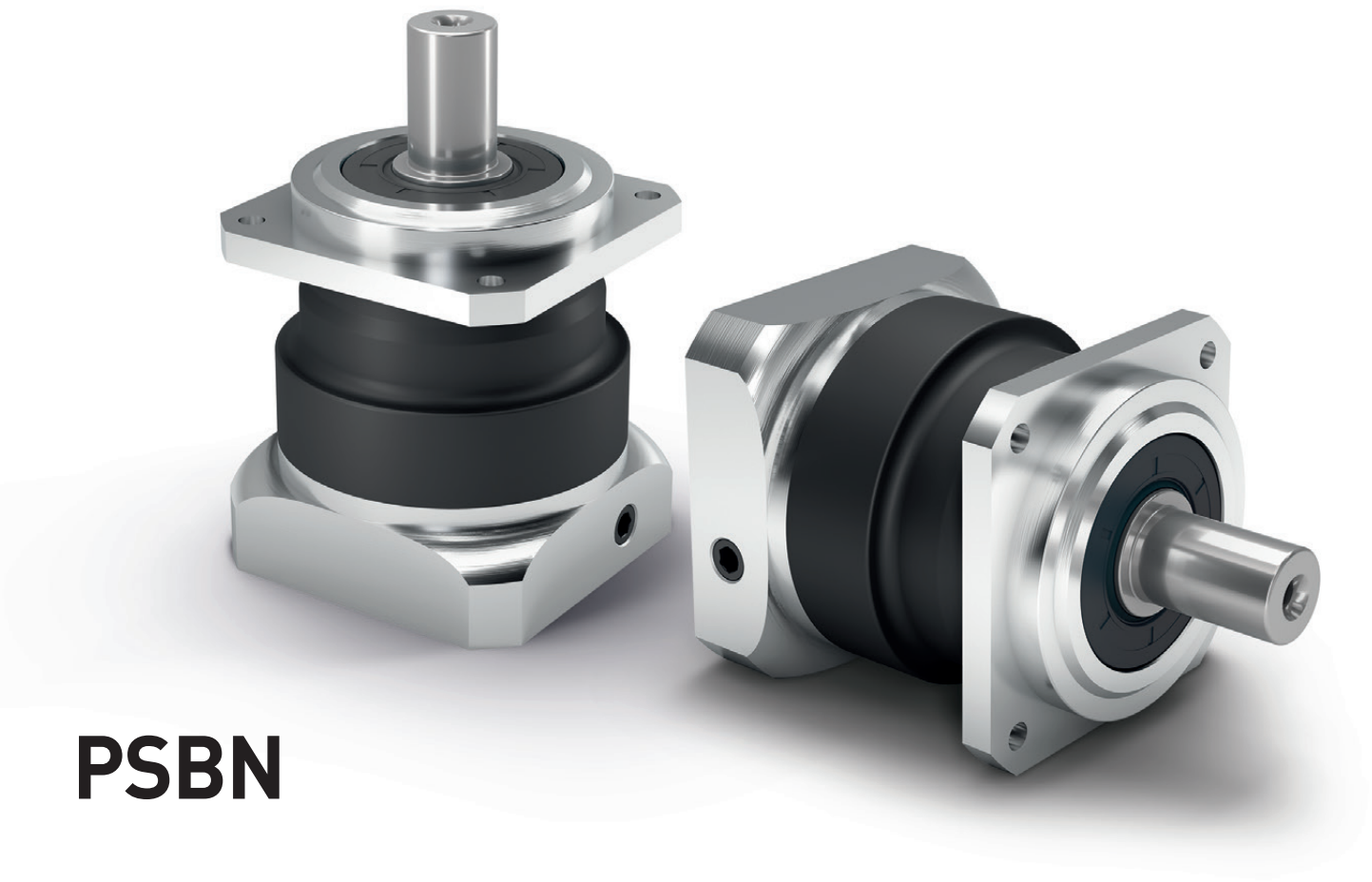

PSBN

The high-performance precision planetary gearbox with helical gearing for a particularly quiet drive

Our **PSBN** is the ideal combination of a precision planetary gearbox and efficient bearing technology. It was designed specifically to achieve maximum performance at high speed. Thanks to the helical gearing, it operates particularly smoothly - and is quieter than average.

Nominal output torque	**28 - 470 Nm**
Radial force	**1000 - 5800 N**
Axial force	**1500 - 9400 N**
Torsional backlash	**1 - 5 arcmin**
Protection class	**IP65**

Frame sizes

70 **90** **115** **142**

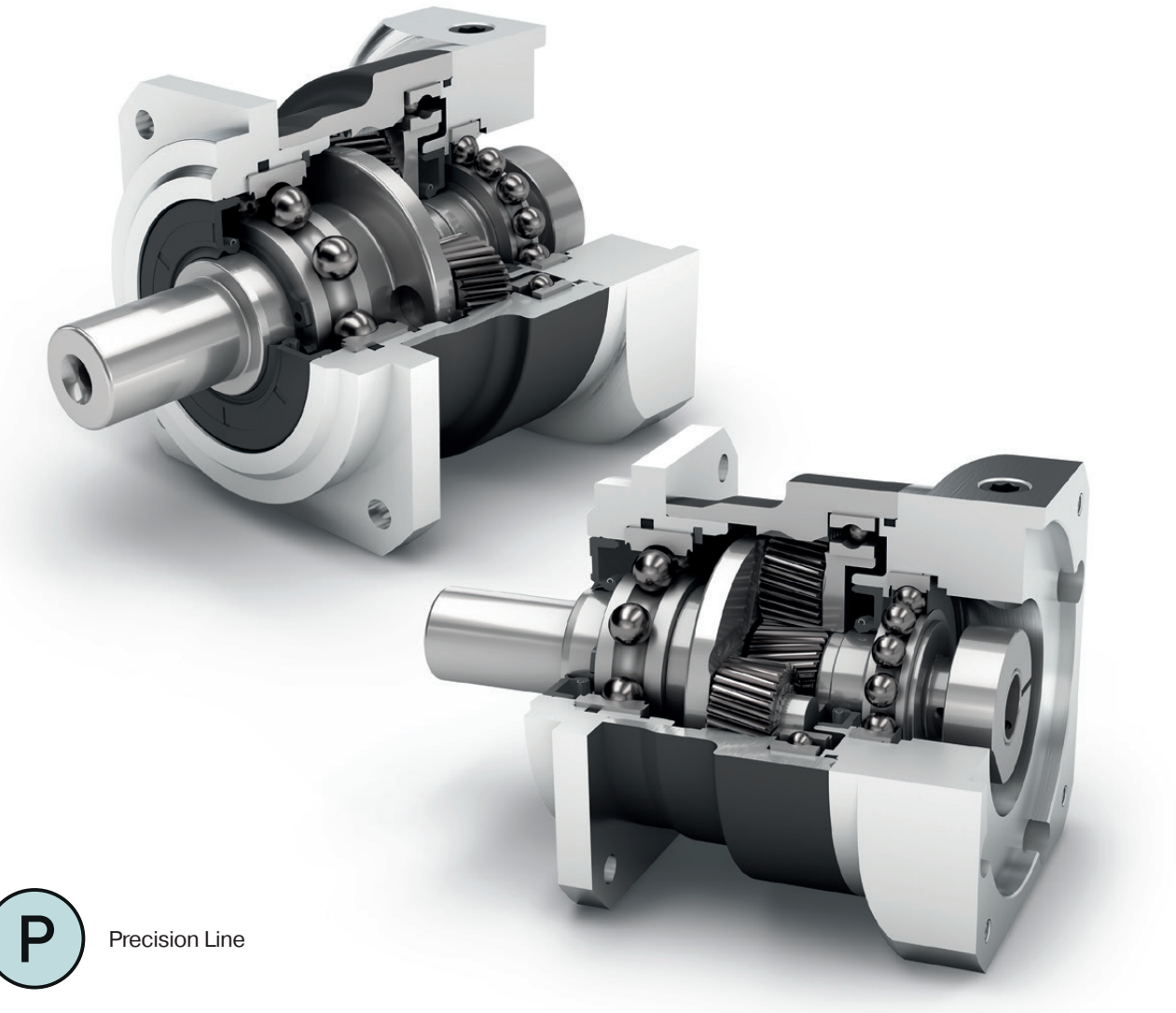

- Precision Line
- Coaxial gearbox
- Helical gear
- Reinforced deep groove ball bearings
- Planet carrier in cage design
- Equidirectional rotation
- Square type output flange
- Rotary shaft seal
- Option: Reduced backlash

Detailed explanations of the technical features starting on page 173.

Code	Gearbox characteristics			PSBN070	PSBN090	PSBN115	PSBN142	p[1]
	Service life (L_{10h})	t_L	h	20,000				
	Service life at T_{2N} x 0,88			30,000				
	Efficiency at full load[2]	η	%	98				1
				96				2
	Min. operating temperature	T_{min}	°C (°F)	-25 (-13)				
	Max. operating temperature	T_{max}		90 (194)				
	Protection class			IP65				
S	Standard lubrication			Oil (lifetime lubrication)				
F	Food grade lubrication			Oil (lifetime lubrication)				
L	Low temperature lubrication[3]			Oil (lifetime lubrication)				
	Installation position			Any				
S	Standard backlash	j_t	arcmin	< 3				1
				< 5				2
R	Reduced backlash			< 2	< 1	< 1	< 1	
	Torsional stiffness[2]	c_g	Nm /arcmin (lb$_f$.in/ arcmin)	4.1 - 5.4 (36 - 48)	9.3 - 12.8 (82 - 113)	22.5 - 32.5 (199 - 288)	59.5 - 76.0 (527 - 673)	1
				4.1 - 5.7 (36 - 50)	10.2 - 13.4 (90 - 119)	25.5 - 35.0 (226 - 310)	57.5 - 71.0 (509 - 628)	2
	Gearbox weight[2]	m_G	kg (lb$_m$)	1.4 - 1.5 (3.1 - 3.3)	2.8 - 2.9 (6.2 - 6.3)	5.4 - 5.8 (12.0 - 12.8)	13.4 - 13.7 (29.6 - 30.3)	1
				2.1 (4.6)	3.4 - 3.5 (7.4 - 7.6)	6.7 - 6.9 (14.7 - 15.1)	15.4 - 15.8 (33.9 - 34.8)	2
S	Standard surface			Housing: Steel – heat-treated and post-oxidized (black)				
	Running noise[4]	Q_g	dB(A)	57	58	63	66	
	Max. bending moment based on the gearbox input flange[5]	M_b	Nm (lb$_f$.in)	18 (159)	38 (336)	80 (708)	180 (1593)	1
				18 (159)	18 (159)	38 (336)	80 (708)	2

Output shaft loads			PSBN070	PSBN090	PSBN115	PSBN142	p[1]
Radial force for 20,000 h[6][7]	$F_{r\ 20.000\ h}$	N (lb$_f$)	1000 (225)	1900 (427)	2300 (517)	4200 - 5800 (944 - 1304)	
Axial force for 20,000 h[6][7]	$F_{a\ 20.000\ h}$		1500 (337)	3000 (674)	4400 (989)	9400 (2113)	
Radial force for 30,000 h[6][7]	$F_{r\ 30.000\ h}$		850 (191)	1700 (382)	2000 (450)	3700 - 5100 (832 - 1147)	
Axial force for 30,000 h[6][7]	$F_{a\ 30.000\ h}$		1300 (292)	2500 (562)	3700 (832)	7700 (1731)	
Maximum radial force[7][8]	$F_{r\ Stat}$		1600 (360)	3100 (697)	4500 (1012)	9500 (2136)	
Maximum axial force[7][8]	$F_{a\ Stat}$		1500 (337)	2800 (629)	4500 (1012)	9600 (2158)	
Tilting moment for 20,000 h[6][8]	$M_{K\ 20.000\ h}$	Nm (lb$_f$.in)	68 (602)	154 (1363)	226 (2000)	581 - 811 (5143 - 7179)	
Tilting moment for 30,000 h[6][8]	$M_{K\ 30.000\ h}$		58 (513)	138 (1221)	197 (1744)	512 - 697 (4531 - 6169)	

Moment of inertia			PSBN070	PSBN090	PSBN115	PSBN142	p[1]
Mass moment of inertia[2]	J	kgcm^2 (lb$_f$.in.s^{2}10^{-4})	0.127 - 0.260 (1.124 - 2.301)	0.327 - 0.785 (2.894 - 6.948)	0.874 - 2.650 (7.736 - 23.454)	6.539 - 14.440 (57.875 - 127.805)	1
			0.123 - 0.175 (1.089 - 1.549)	0.124 - 0.200 (1.097 - 1.770)	0.321 - 0.600 (2.841 - 5.310)	0.841 - 2.003 (7.443 - 17.728)	2

[1] Number of stages
[2] The ratio-dependent values can be retrieved in Tec Data Finder – www.neugart.com
[3] T_{min} = -40°C. Optimal operating temperature max. 50°C
[4] Sound pressure level from 1 m, measured on input running at n_1=3000 rpm no load; i=5
[5] Max. motor weight* in kg = 0.2 x M_b / motor length in m
* with symmetrically distributed motor weight
* with horizontal and stationary mounting
[6] These values are based on an output shaft speed of n_2=100 rpm
[7] Based on center of output shaft
[8] Other (sometimes higher) values following changes to T_{2N}, F_r, F_a, cycle, and service life of bearing. Application specific configuration with NCP – www.neugart.com

Output torques			PSBN070	PSBN090	PSBN115	PSBN142	i(1)	p(2)
Nominal output torque(3)(4)	T_{2N}	Nm (lb_f.in)	29 (257)	54 (478)	135 (1195)	380 (3363)	3	1
			39 (345)	80 (708)	180 (1593)	470 (4160)	4	
			40 (354)	80 (708)	175 (1549)	405 (3585)	5	
			37 (327)	78 (690)	175 (1549)	355 (3142)	7	
			39 (345)	75 (664)	155 (1372)	350 (3098)	8	
			28 (248)	59 (522)	140 (1239)	305 (2699)	10	
			29 (257)	54 (478)	135 (1195)	380 (3363)	12	2
			29 (257)	54 (478)	135 (1195)	380 (3363)	15	
			39 (345)	80 (708)	180 (1593)	450 (3983)	16	
			39 (345)	80 (708)	180 (1593)	450 (3983)	20	
			40 (354)	80 (708)	175 (1549)	405 (3585)	25	
			40 (354)	80 (708)	175 (1549)	405 (3585)	35	
			39 (345)	80 (708)	180 (1593)	470 (4160)	40	
			40 (354)	80 (708)	175 (1549)	405 (3585)	50	
			37 (327)	78 (690)	175 (1549)	355 (3142)	70	
			28 (248)	59 (522)	140 (1239)	305 (2699)	100	
Max. output torque(4)(5)	T_{2max}	Nm (lb_f.in)	46 (407)	86 (761)	216 (1912)	608 (5381)	3	1
			62 (549)	128 (1133)	288 (2549)	752 (6656)	4	
			64 (566)	128 (1133)	280 (2478)	648 (5735)	5	
			59 (522)	125 (1106)	280 (2478)	568 (5027)	7	
			62 (549)	120 (1062)	248 (2195)	560 (4956)	8	
			45 (398)	94 (832)	224 (1983)	488 (4319)	10	
			46 (407)	86 (761)	216 (1912)	608 (5381)	12	2
			46 (407)	86 (761)	216 (1912)	608 (5381)	15	
			62 (549)	128 (1133)	288 (2549)	720 (6373)	16	
			62 (549)	128 (1133)	288 (2549)	720 (6373)	20	
			64 (566)	128 (1133)	280 (2478)	648 (5735)	25	
			64 (566)	128 (1133)	280 (2478)	648 (5735)	35	
			62 (549)	128 (1133)	288 (2549)	752 (6656)	40	
			64 (566)	128 (1133)	280 (2478)	648 (5735)	50	
			59 (522)	125 (1106)	280 (2478)	568 (5027)	70	
			45 (398)	94 (832)	224 (1983)	488 (4319)	100	

(1) Ratios ($i=n_1/n_2$)
(2) Number of stages
(3) Application specific configuration with NCP – www.neugart.com
(4) Values for feather key (code "A"): for repeated load
(5) 30,000 rotations of the output shaft permitted; see page 166

Output torques			PSBN070	PSBN090	PSBN115	PSBN142	i[1]	p[2]
Emergency stop torque[3]	T_{2Stop}	Nm (lb_f.in)	90 (797)	210 (1859)	490 (4337)	1250 (11063)	3	1
			120 (1062)	280 (2478)	650 (5753)	1650 (14604)	4	
			130 (1151)	280 (2478)	650 (5753)	1650 (14604)	5	
			80 (708)	175 (1549)	340 (3009)	1300 (11506)	7	
			90 (797)	200 (1770)	380 (3363)	1100 (9736)	8	
			90 (797)	200 (1770)	480 (4248)	600 (5310)	10	
			135 (1195)	220 (1947)	500 (4425)	1250 (11063)	12	2
			135 (1195)	220 (1947)	500 (4425)	1250 (11063)	15	
			150 (1328)	300 (2655)	650 (5753)	1650 (14604)	16	
			150 (1328)	300 (2655)	650 (5753)	1650 (14604)	20	
			150 (1328)	300 (2655)	650 (5753)	1650 (14604)	25	
			150 (1328)	300 (2655)	650 (5753)	1650 (14604)	35	
			150 (1328)	300 (2655)	650 (5753)	1650 (14604)	40	
			150 (1328)	300 (2655)	650 (5753)	1650 (14604)	50	
			80 (708)	175 (1549)	340 (3009)	1300 (11506)	70	
			80 (708)	200 (1770)	480 (4248)	600 (5310)	100	

Input speeds			PSBN070	PSBN090	PSBN115	PSBN142	i[1]	p[2]
Average thermal input speed at T_{2N} and S1[4][5]	n_{1N}	rpm	3800[6]	3400[6]	2900[6]	1600[6]	3	1
			4400[6]	3700[6]	3000[6]	1950[6]	4	
			4600[6]	3900[6]	3500[6]	2350[6]	5	
			5000	4500	4000[6]	3150[6]	7	
			5000	4500	4000	3450[6]	8	
			5000	4500	4000	3500	10	
			5000	5000	4500	3150[6]	12	2
			5000	5000	4500	3950[6]	15	
			5000	5000	4500	3400[6]	16	
			5000	5000	4500	4000[6]	20	
			5000	5000	4500	4000	25	
			5000	5000	4500	4000	35	
			5000	5000	4500	4000	40	
			5000	5000	4500	4000	50	
			5000	5000	4500	4000	70	
			5000	5000	4500	4000	100	
Max. mechanical input speed[4]	n_{1Limit}	rpm	14,000	10,000	8500	6500		1
			14,000	14,000	10,000	8500		2

[1] Ratios ($i=n_1/n_2$)
[2] Number of stages
[3] Permitted 1000 times
[4] Application-specific speed configurations with NCP – www.neugart.com
[5] See page 166 for the definition
[6] Average thermal input speed at 50% T_{2N} and S1

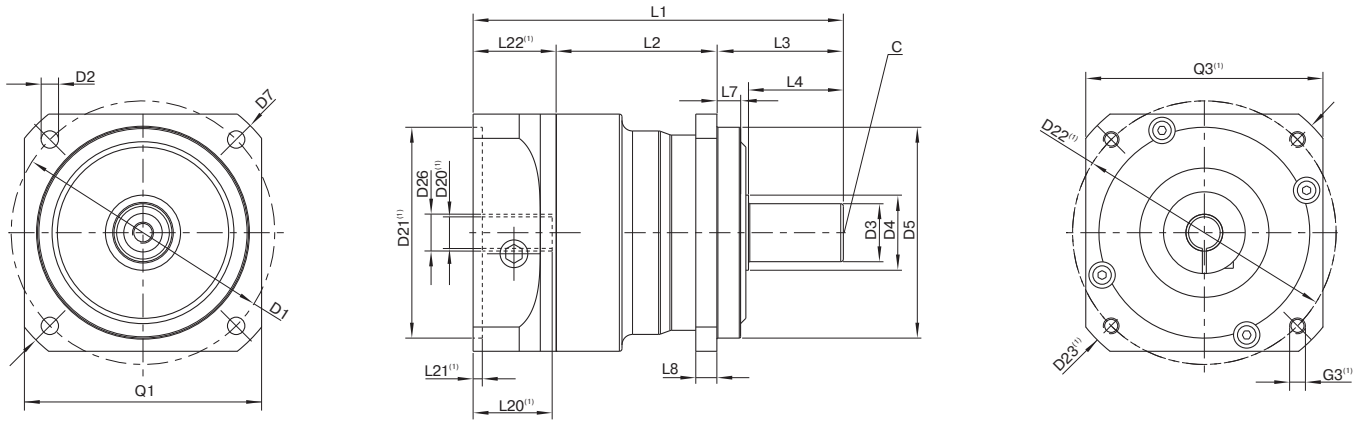

Drawing corresponds to a PSBN090 / 1-stage / smooth output shaft / 14 mm clamping system / motor adaptation – 2-part – round universal flange / B5 flange type motor

(1) The dimensions vary with the motor/gearbox flange. The input flange dimensions can be retrieved for each specific motor in Tec Data Finder at www.neugart.com

Geometry(2)			PSBN070	PSBN090	PSBN115	PSBN142	p(3)	Code
Pitch circle diameter output	D1		70 (2.756)	100 (3.937)	130 (5.118)	165 (6.496)		
Mounting bore output	D2	4x	5.5 (0.217)	6.6 (0.260)	9.0 (0.354)	11.0 (0.433)		
Shaft diameter output	D3	j6	16 (0.630)	22 (0.866)	32 (1.260)	40 (1.575)		
Shaft collar output	D4		23.5 (0.925)	28.5 (1.122)	38.5 (1.516)	48.5 (1.909)		
Centering diameter output	D5	g6	50 (1.969)	80 (3.150)	110 (4.331)	130 (5.118)		
Diagonal dimension output	D7		80 (3.150)	115 (4.528)	148 (5.827)	185 (7.283)		
Flange cross section output	Q1	■	60 (2.362)	90 (3.543)	115 (4.528)	140 (5.512)		
Min. total length	L1		116.5 (4.587)	140.5 (5.531)	182.5 (7.185)	247.5 (9.744)	1	
			145 (5.709)	162.5 (6.398)	204.5 (8.051)	278.5 (10.965)	2	
Housing length	L2		54 (2.126)	61 (2.402)	74 (2.913)	100.5 (3.957)	1	
			82.5 (3.248)	89 (3.504)	107.5 (4.232)	138,5 (5.453)	2	
Shaft length output	L3		37 (1.457)	48 (1.890)	65 (2.559)	97 (3.819)		
Centering depth output	L7		6 (0.236)	9 (0.354)	4 (0.157)	12 (0.472)		
Flange thickness output	L8		6 (0.236)	8 (0.315)	10 (0.394)	12 (0.472)		
Center hole (DIN 332, type DR)	C		M5x12.5	M8x19	M12x28	M16x36		
Motor shaft diameter j6/k6	D20		More information on page 163/164					
Clamping system diameter input	D26							
Output shaft with feather key (DIN 6885-1)			A 5x5x25	A 6x6x28	A 10x8x50	A 12x8x65		A
Feather key width (DIN 6885-1)	B1		5 (0.197)	6 (0.236)	10 (0.394)	12 (0.472)		
Shaft height including feather key (DIN 6885-1)	H1		18 (0.709)	24.5 (0.965)	35 (1.378)	43 (1.693)		
Shaft length from shoulder	L4		28 (1.102)	36 (1.417)	58 (2.283)	82 (3.228)		
Feather key length	L5		25 (0.984)	28 (1.102)	50 (1.969)	65 (2.559)		
Distance from shaft end	L6		2 (0.079)	4 (0.157)	4 (0.157)	8 (0.315)		
Smooth output shaft								B
Shaft length from shoulder	L4		28 (1.102)	36 (1.417)	58 (2.283)	82 (3.228)		

(2) Dimensions in mm
(3) Number of stages

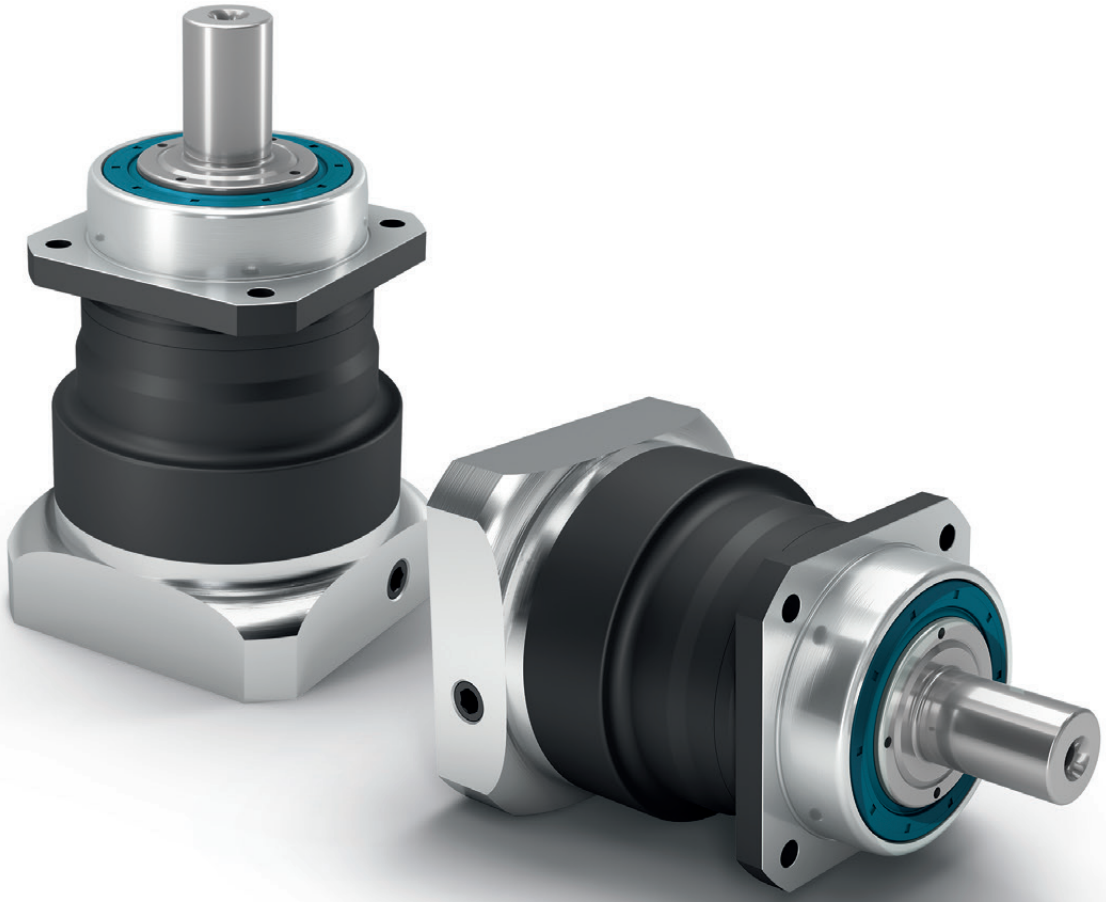

PSN

The helical precision planetary gearbox for low-noise operation and high bearing loads

Our **PSN** is pure progress: Its helical gearing ensures low-noise synchronization. With this precision planetary gearbox, vibrations are reduced to a minimum. Precision even under very high loads makes the **PSN** one of the most high-performance gearboxes in the world.

Nominal output torque	**28 - 950 Nm**
Radial force	**3200 - 20000 N**
Axial force	**4400 - 19000 N**
Torsional backlash	**1 - 5 arcmin**
Protection class	**IP65**

Frame sizes

70 **90** **115** **142** **190**

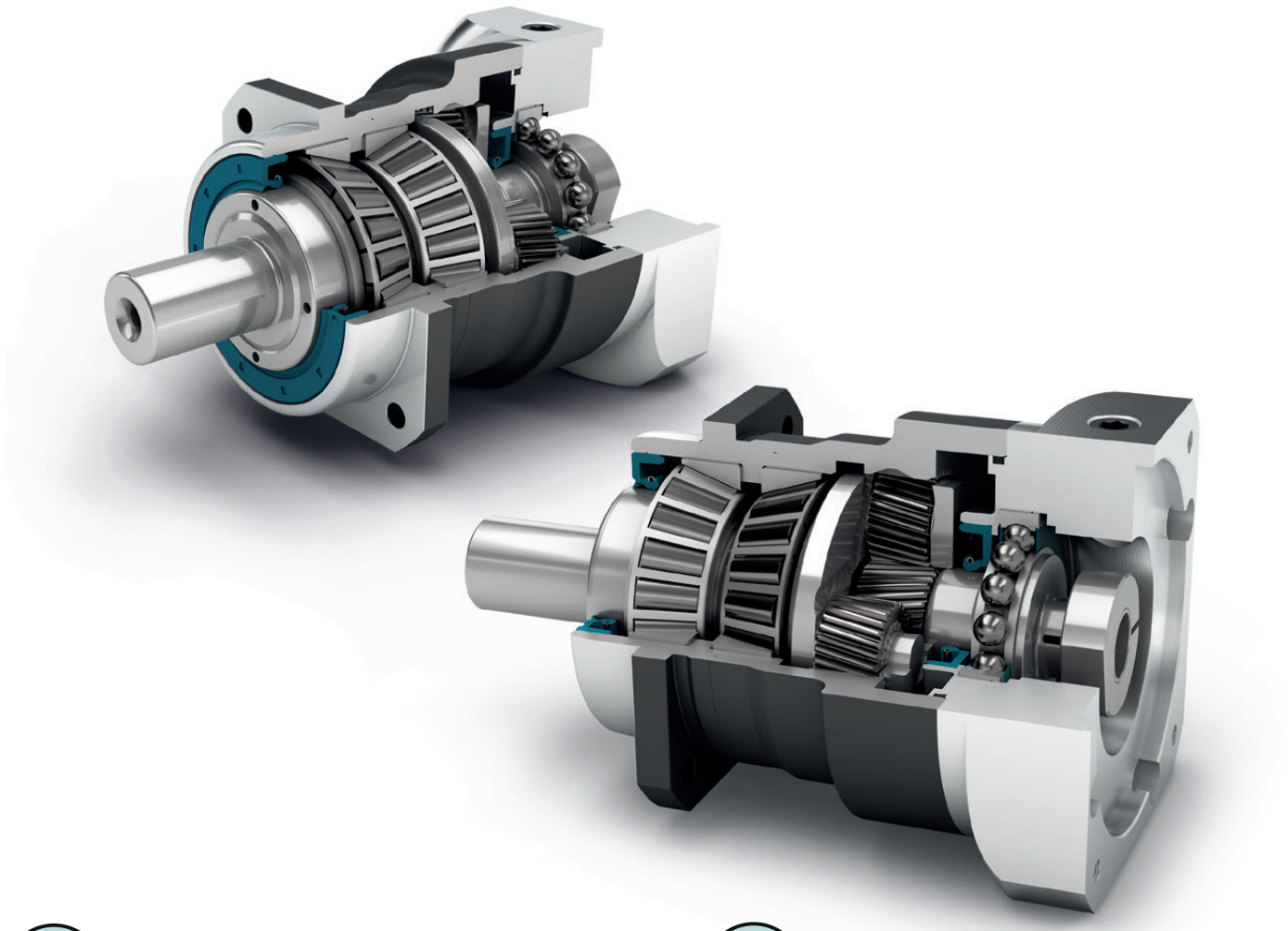

- Precision Line
- Equidirectional rotation
- Square type output flange
- Rotary shaft seal
- Planet carrier in cage design
- Option: Splined output shaft (DIN 5480)
- Coaxial gearbox
- Helical gear
- Preloaded tapered roller bearings
- Extra long centering collar
- Option: Reduced backlash
- Option: Planetary gearbox with mounted pinion on page 132

Detailed explanations of the technical features starting on page 173.

Code	Gearbox characteristics			PSN070	PSN090	PSN115	PSN142	PSN190	p[1]
	Service life (L_{10h})	t_L	h	20,000					
	Service life at T_{2N} x 0.88			30,000					
	Efficiency at full load[2]	η	%	98					1
				97					2
	Min. operating temperature	T_{min}	°C (°F)	-25 (-13)					
	Max. operating temperature	T_{max}		90 (194)					
	Protection class			IP65					
S	Standard lubrication			Oil (lifetime lubrication)					
F	Food grade lubrication			Oil (lifetime lubrication)					
L	Low temperature lubrication[3]			Oil (lifetime lubrication)					
	Installation position			Any					
S	Standard backlash	j_t	arcmin	< 3					1
				< 5					2
R	Reduced backlash			< 2	< 1	< 1	< 1	< 1	
	Torsional stiffness[2]	c_g	Nm /arcmin (lb_f.in/ arcmin)	3.6 - 4.8 (32 - 42)	9.2 - 13.0 (81 - 115)	22.0 - 34.5 (195 - 305)	62.0 - 88.0 (549 - 779)	181.0 - 246.0 (1602 - 2177)	1
				3.6 - 5.0 (32 - 44)	10.2 - 13.8 (90 - 122)	28.0 - 39.5 (248 - 350)	61.0 - 85.0 (540 - 752)	179.0 - 255.0 (1584 - 2257)	2
	Gearbox weight[2]	m_G	kg (lb_m)	1.9 - 2.0 (4.3 - 4.4)	3.4 - 3.5 (7.6 - 7.7)	6.8 - 7.1 (14.9 - 15.7)	15.3 - 15.8 (33.8 - 34.7)	34.9 - 36.7 (76.9 - 81.0)	1
				2.6 - 2.7 (5.7 - 5.9)	4.0 - 4.1 (8.8 - 9.0)	8.0 - 8.2 (17.6 - 18.0)	17.1 - 17.6 (37.6 - 38.8)	39.8 - 41.7 (87.8 - 91.9)	2
S	Standard surface			Housing: Steel – heat-treated and post-oxidized (black)					
	Running noise[4]	Q_g	dB(A)	57	58	63	66	68	
	Max. bending moment based on the gearbox input flange[5]	M_b	Nm (lb_f.in)	18 (159)	38 (336)	80 (708)	180 (1593)	300 (2655)	1
				18 (159)	18 (159)	38 (336)	80 (708)	180 (1593)	2

Output shaft loads			PSN070	PSN090	PSN115	PSN142	PSN190	p[1]
Radial force for 20,000 h[6][7]	$F_{r\,20.000\,h}$	N (lb_f)	3200 (719)	5500 (1236)	6000 (1349)	13000 (2923)	20000 (4496)	
Axial force for 20,000 h[6][7]	$F_{a\,20.000\,h}$		4400 (989)	6400 (1439)	8000 (1798)	15000 (3372)	19000 (4271)	
Radial force for 30,000 h[6][7]	$F_{r\,30.000\,h}$		3200 (719)	4800 (1079)	5400 (1214)	11500 (2585)	17500 (3934)	
Axial force for 30,000 h[6][7]	$F_{a\,30.000\,h}$		3900 (877)	5700 (1281)	7000 (1574)	13500 (3035)	18500 (4159)	
Maximum radial force[7][8]	$F_{r\,Stat}$		3200 (719)	5500 (1236)	6000 (1349)	13000 (2923)	20000 (4496)	
Maximum axial force[7][8]	$F_{a\,Stat}$		4400 (989)	6400 (1439)	8000 (1798)	15000 (3372)	19000 (4271)	
Tilting moment for 20,000 h[6][8]	$M_{K\,20.000\,h}$	Nm (lb_f.in)	203 (1797)	419 (3708)	562 (4974)	1566 (13860)	2887 (25552)	
Tilting moment for 30,000 h[6][8]	$M_{K\,30.000\,h}$		203 (1797)	366 (3239)	506 (4478)	1385 (12258)	2526 (22357)	

Moment of inertia			PSN070	PSN090	PSN115	PSN142	PSN190	p[1]
Mass moment of inertia[2]	J	kgcm² (lb_f.in.s²$10^{-4}$)	0.128 - 0.272 (1.133 - 2.407)	0.330 - 0.811 (2.921 - 7.178)	0.857 - 2.484 (7.585 - 21.985)	6.475 - 13.112 (57.309 - 116.051)	21.695 - 53.182 (192.017 - 470.700)	1
			0.123 - 0.177 (1.089 - 1.567)	0.124 - 0.204 (1.097 - 1.806)	0.321 - 0.600 (2.841 - 5.310)	0.840 - 1.962 (7.435 - 17.365)	6.360 - 10.654 (56.291 - 94.296)	2

[1] Number of stages
[2] The ratio-dependent values can be retrieved in Tec Data Finder – www.neugart.com
[3] T_{min} = -40°C. Optimal operating temperature max. 50°C
[4] Sound pressure level from 1 m, measured on input running at n_1=3000 rpm no load; i=5
[5] Max. motor weight* in kg = 0.2 x M_b / motor length in m
* with symmetrically distributed motor weight
* with horizontal and stationary mounting
[6] These values are based on an output shaft speed of n_2=100 rpm
[7] Based on center of output shaft
[8] Other (sometimes higher) values following changes to T_{2N}, F_r, F_a, cycle, and service life of bearing. Application specific configuration with NCP – www.neugart.com

Output torques			PSN070	PSN090	PSN115	PSN142	PSN190	i(1)	p(2)
Nominal output torque(3)(4)	T_{2N}	Nm (lb_f.in)	29 (257)	54 (478)	135 (1195)	380 (3363)	845 (7479)	3	1
			39 (345)	80 (708)	180 (1593)	470 (4160)	950 (8408)	4	
			40 (354)	80 (708)	175 (1549)	405 (3585)	950 (8408)	5	
			37 (327)	78 (690)	175 (1549)	355 (3142)	900 (7966)	7	
			39 (345)	75 (664)	155 (1372)	350 (3098)	-	8	
			28 (248)	59 (522)	140 (1239)	305 (2699)	750 (6638)	10	
			29 (257)	54 (478)	135 (1195)	380 (3363)	845 (7479)	12	2
			29 (257)	54 (478)	135 (1195)	380 (3363)	845 (7479)	15	
			39 (345)	80 (708)	180 (1593)	450 (3983)	950 (8408)	16	
			39 (345)	80 (708)	180 (1593)	450 (3983)	950 (8408)	20	
			40 (354)	80 (708)	175 (1549)	405 (3585)	950 (8408)	25	
			40 (354)	80 (708)	175 (1549)	405 (3585)	950 (8408)	35	
			39 (345)	80 (708)	180 (1593)	470 (4160)	950 (8408)	40	
			40 (354)	80 (708)	175 (1549)	405 (3585)	950 (8408)	50	
			37 (327)	78 (690)	175 (1549)	355 (3142)	900 (7966)	70	
			28 (248)	59 (522)	140 (1239)	305 (2699)	750 (6638)	100	
Max. output torque(4)(5)	T_{2max}	Nm (lb_f.in)	46 (407)	86 (761)	216 (1912)	608 (5381)	1352 (11966)	3	1
			62 (549)	128 (1133)	288 (2549)	752 (6656)	1520 (13453)	4	
			64 (566)	128 (1133)	280 (2478)	648 (5735)	1520 (13453)	5	
			59 (522)	125 (1106)	280 (2478)	568 (5027)	1440 (12745)	7	
			62 (549)	120 (1062)	248 (2195)	560 (4956)	-	8	
			45 (398)	94 (832)	224 (1983)	488 (4319)	1200 (10621)	10	
			46 (407)	86 (761)	216 (1912)	608 (5381)	1352 (11966)	12	2
			46 (407)	86 (761)	216 (1912)	608 (5381)	1352 (11966)	15	
			62 (549)	128 (1133)	288 (2549)	720 (6373)	1520 (13453)	16	
			62 (549)	128 (1133)	288 (2549)	720 (6373)	1520 (13453)	20	
			64 (566)	128 (1133)	280 (2478)	648 (5735)	1520 (13453)	25	
			64 (566)	128 (1133)	280 (2478)	648 (5735)	1520 (13453)	35	
			62 (549)	128 (1133)	288 (2549)	752 (6656)	1520 (13453)	40	
			64 (566)	128 (1133)	280 (2478)	648 (5735)	1520 (13453)	50	
			59 (522)	125 (1106)	280 (2478)	568 (5027)	1440 (12745)	70	
			45 (398)	94 (832)	224 (1983)	488 (4319)	1200 (10621)	100	

(1) Ratios ($i=n_1/n_2$)
(2) Number of stages
(3) Application specific configuration with NCP – www.neugart.com
(4) Values for feather key (code "A"): for repeated load
(5) 30,000 rotations of the output shaft permitted; see page 166

Output torques			PSN070	PSN090	PSN115	PSN142	PSN190	i[1]	p[2]
Emergency stop torque[3]	T_{2Stop}	Nm (lb_f.in)	90 (797)	210 (1859)	490 (4337)	1250 (11063)	2400 (21242)	3	1
			120 (1062)	280 (2478)	650 (5753)	1650 (14604)	3200 (28322)	4	
			130 (1151)	280 (2478)	650 (5753)	1650 (14604)	3200 (28322)	5	
			80 (708)	175 (1549)	340 (3009)	1300 (11506)	3200 (28322)	7	
			90 (797)	200 (1770)	380 (3363)	1100 (9736)	-	8	
			90 (797)	200 (1770)	480 (4248)	600 (5310)	1700 (15046)	10	
			135 (1195)	220 (1947)	500 (4425)	1250 (11063)	2400 (21242)	12	2
			135 (1195)	220 (1947)	500 (4425)	1250 (11063)	2400 (21242)	15	
			150 (1328)	300 (2655)	650 (5753)	1650 (14604)	3200 (28322)	16	
			150 (1328)	300 (2655)	650 (5753)	1650 (14604)	3200 (28322)	20	
			150 (1328)	300 (2655)	650 (5753)	1650 (14604)	3200 (28322)	25	
			150 (1328)	300 (2655)	650 (5753)	1650 (14604)	3200 (28322)	35	
			150 (1328)	300 (2655)	650 (5753)	1650 (14604)	3200 (28322)	40	
			150 (1328)	300 (2655)	650 (5753)	1650 (14604)	3200 (28322)	50	
			80 (708)	175 (1549)	340 (3009)	1300 (11506)	3200 (28322)	70	
			80 (708)	200 (1770)	480 (4248)	600 (5310)	1700 (15046)	100	

Input speeds			PSN070	PSN090	PSN115	PSN142	PSN190	i[1]	p[2]
Average thermal input speed at T_{2N} and S1[4][5]	n_{1N}	rpm	3000[6]	2700[6]	2000[6]	1000[6]	750[6]	3	1
			3700[6]	3050[6]	2250[6]	1250[6]	900[6]	4	
			4400[6]	3700[6]	2750[6]	1550[6]	1100[6]	5	
			4500	4000	3500[6]	2000[6]	1450[6]	7	
			4500	4000	3500	2200[6]	-	8	
			4500	4000	3500	2500[6]	1900[6]	10	
			4500	4500	4000[6]	2400[6]	1550[6]	12	2
			4500	4500	4000	3000[6]	1900[6]	15	
			4500	4500	4000[6]	2600[6]	1650[6]	16	
			4500	4500	4000	3250[6]	2050[6]	20	
			4500	4500	4000	3500[6]	2200[6]	25	
			4500	4500	4000	3500	2800[6]	35	
			4500	4500	4000	3500	3000[6]	40	
			4500	4500	4000	3500	3000	50	
			4500	4500	4000	3500	3000	70	
			4500	4500	4000	3500	3000	100	
Max. mechanical input speed[4]	n_{1Limit}	rpm	14,000	10,000	8500	6500	6000		1
			14,000	14,000	10,000	8500	6500		2

[1] Ratios ($i=n_1/n_2$)
[2] Number of stages
[3] Permitted 1000 times
[4] Application-specific speed configurations with NCP – www.neugart.com
[5] See page 166 for the definition
[6] Average thermal input speed at 50% T_{2N} and S1

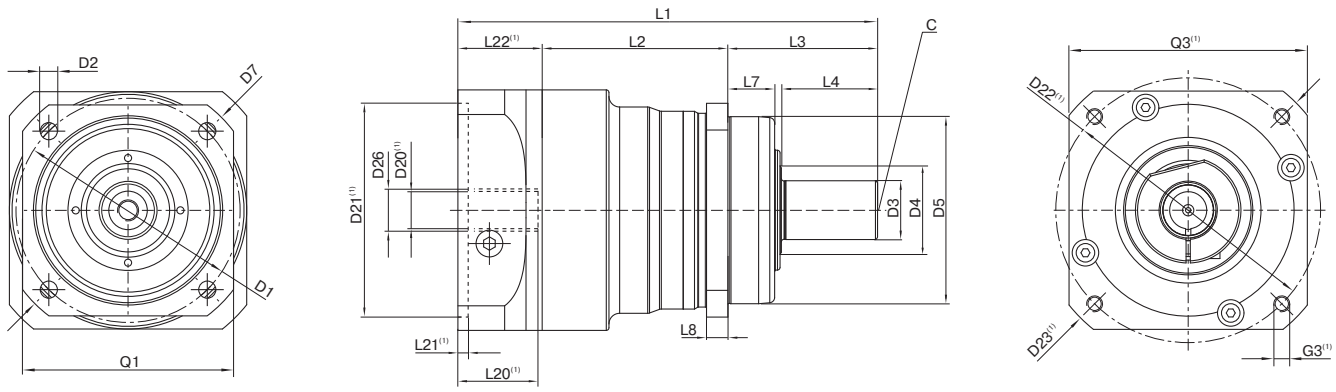

Drawing corresponds to a PSN090 / 1-stage / smooth output shaft / 14 mm clamping system / motor adaptation – 2-part – round universal flange / B5 flange type motor

(1) The dimensions vary with the motor/gearbox flange. The input flange dimensions can be retrieved for each specific motor in Tec Data Finder at www.neugart.com

Geometry(2)			**PSN070**	**PSN090**	**PSN115**	**PSN142**	**PSN190**	**p**(3)	**Code**
Pitch circle diameter output	D1		68 - 75 (2.677 - 2.953)	85 (3.346)	120 (4.724)	165 (6.496)	215 (8.465)		
Mounting bore output	D2	4x	5.5 (0.217)	6.5 (0.256)	9.0 (0.354)	11.0 (0.433)	13.5 (0.531)		
Shaft diameter output	D3	k6	16 (0.630)	22 (0.866)	32 (1.260)	40 (1.575)	55 (2.165)		
Shaft collar output	D4		21.5 (0.846)	31.5 (1.240)	41.5 (1.634)	57.5 (2.264)	76.5 (3.012)		
Centering diameter output	D5	g7	60 (2.362)	70 (2.756)	90 (3.543)	130 (5.118)	160 (6.299)		
Diagonal dimension output	D7		92 (3.622)	100 (3.937)	140 (5.512)	185 (7.283)	240 (9.449)		
Flange cross section output	Q1	■	70 (2.756)	80 (3.150)	110 (4.331)	142 (5.591)	190 (7.480)		
Min. total length	L1		134 (5.276)	157 (6.181)	202.5 (7.972)	261.5 (10.295)	310.5 (12.224)	1	
			162.5 (6.398)	179 (7.047)	224.5 (8.839)	292.5 (11.516)	355.5 (13.996)	2	
Housing length	L2		60.5 (2.382)	69.5 (2.736)	71 (2.795)	101.5 (3.996)	130.5 (5.138)	1	
			89 (3.504)	98 (3.858)	104.5 (4.114)	139 (5.472)	194 (7.638)	2	
Centering depth output	L7		19 (0.748)	17.5 (0.689)	28 (1.102)	28 (1.102)	28 (1.102)		
Flange thickness output	L8		7 (0.276)	8 (0.315)	10 (0.394)	12 (0.472)	15 (0.591)		
Center hole (DIN 332. type DR)	C		M5x12.5	M8x19	M12x28	M16x36	M20x42		
Motor shaft diameter j6/k6	D20		More information on page 163/164						
Clamping system diameter input	D26								
Output shaft with feather key (DIN 6885-1)			A 5x5x25	A 6x6x28	A 10x8x50	A 12x8x65	A 16x10x70		
Feather key width (DIN 6885-1)	B1		5 (0.197)	6 (0.236)	10 (0.394)	12 (0.472)	16 (0.630)		
Shaft height including feather key (DIN 6885-1)	H1		18 (0.709)	24.5 (0.965)	35 (1.378)	43 (1.693)	59 (2.323)		**A**
Shaft length output	L3		48 (1.890)	56 (2.205)	88 (3.465)	110 (4.331)	112 (4.409)		
Shaft length from shoulder	L4		28 (1.102)	36 (1.417)	58 (2.283)	80 (3.150)	82 (3.228)		
Feather key length	L5		25 (0.984)	28 (1.102)	50 (1.969)	65 (2.559)	70 (2.756)		
Distance from shaft end	L6		2 (0.079)	4 (0.157)	4 (0.157)	8 (0.315)	6 (0.236)		
Smooth output shaft									
Shaft length output	L3		48 (1.890)	56 (2.205)	88 (3.465)	110 (4.331)	112 (4.409)		**B**
Shaft length from shoulder	L4		28 (1.102)	36 (1.417)	58 (2.283)	80 (3.150)	82 (3.228)		
Splined output shaft (DIN 5480)			W16x0.8 x18x6m	W22x1.25 x16x6m	W32x1.25 x24x6m	W40x2.0 x18x6m	W55x2.0 x26x6m		
Width of gearing	L_v		15 (0.591)	15 (0.591)	15 (0.591)	20 (0.787)	22 (0.866)		**C**
Shaft length output	L3		46 (1.811)	46 (1.811)	56 (2.205)	70 (2.756)	71.5 (2.815)		
Shaft length from shoulder	L4		26 (1.024)	26 (1.024)	26 (1.024)	40 (1.575)	41.5 (1.634)		

(2) Dimensions in mm
(3) Number of stages

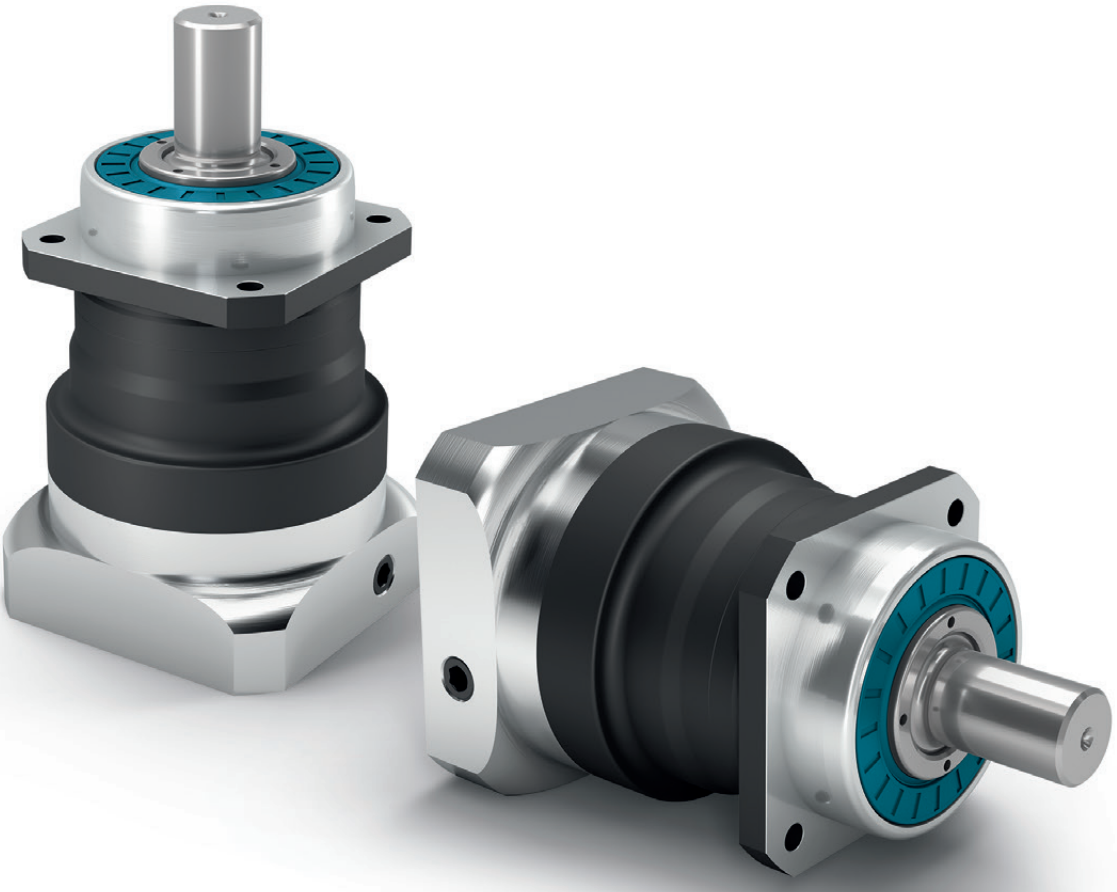

PLN

The perfectly sealed planetary gearbox with straight gearing delivers the maximum performance without ever losing the required stiffness

Our precision straight-toothed planetary gearbox is designed for maximum power and torque. The preloaded tapered roller bearings in the **PLN** and the specially matched seal guarantee optimum performance even in applications where dust and water spray are encountered.

Nominal output torque	**27 - 1800 Nm**
Radial force	**3200 - 21000 N**
Axial force	**4400 - 21000 N**
Torsional backlash	**1 - 5 arcmin**
Protection class	**IP65**

Frame sizes

70 **90** **115** **142** **190**

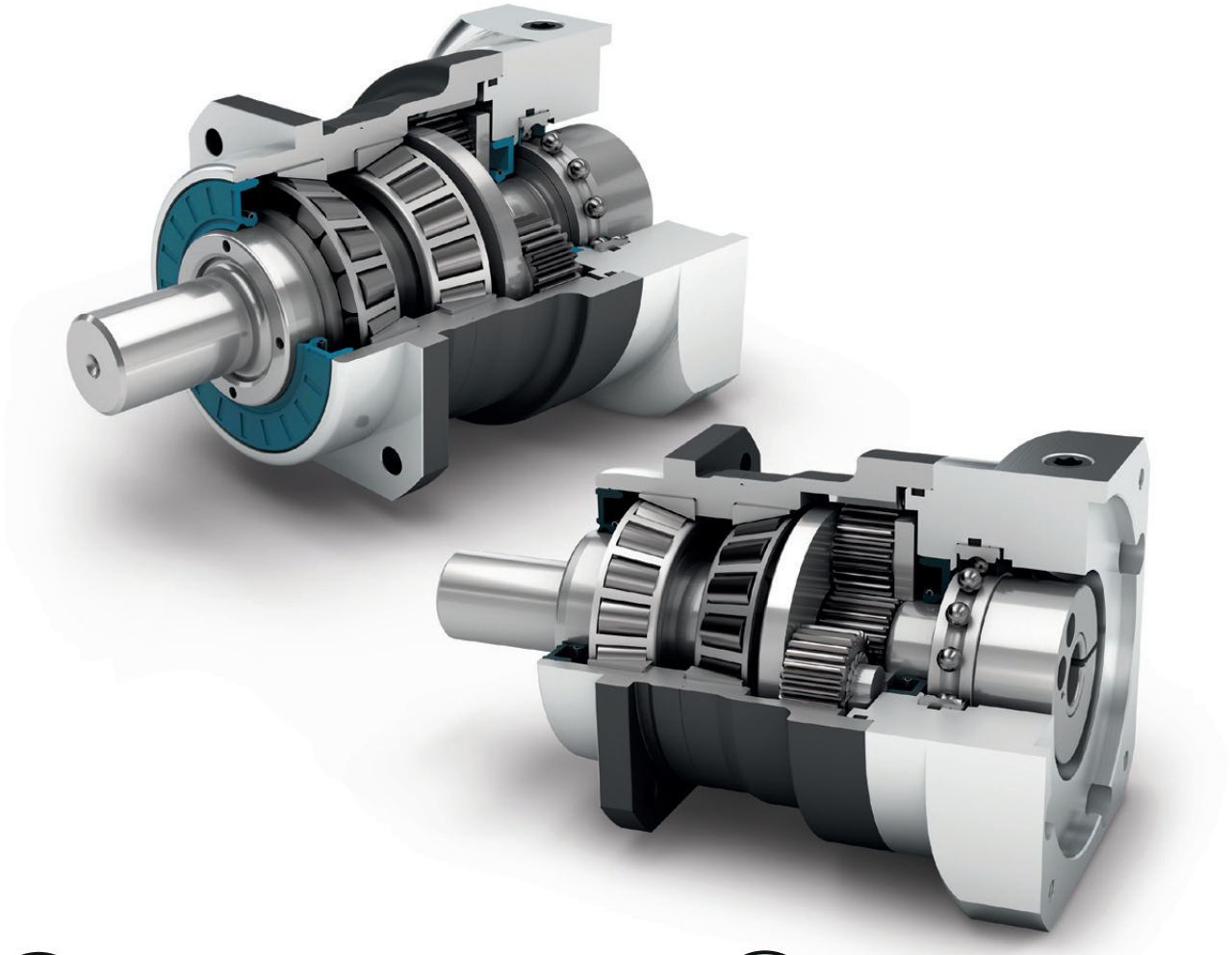

- Precision Line
- Equidirectional rotation
- Square type output flange
- Rotary shaft seal
- Planet carrier in cage design
- Option: Splined output shaft (DIN 5480)
- Coaxial gearbox
- Spur gear
- Preloaded tapered roller bearings
- Extra long centering collar
- Option: Reduced backlash
- Option: Planetary gearbox with mounted pinion on page 132

Detailed explanations of the technical features starting on page 173.

Code	Gearbox characteristics			PLN070	PLN090	PLN115	PLN142	PLN190	p[1]
	Service life (L_{10h})	t_L	h	20,000					
	Service life at T_{2N} x 0,88			30,000					
	Efficiency at full load[2]	η	%	98					1
				95					2
	Min. operating temperature	T_{min}	°C (°F)	-25 (-13)					
	Max. operating temperature	T_{max}		90 (194)					
	Protection class			IP65					
S	Standard lubrication			Oil (lifetime lubrication)					
F	Food grade lubrication			Oil (lifetime lubrication)					
L	Low temperature lubrication[3]			Oil (lifetime lubrication)					
	Installation position			Any					
S	Standard backlash	j_t	arcmin	< 3					1
				< 5					2
R	Reduced backlash			< 2	< 1	< 1	< 1	< 1	
	Torsional stiffness[2]	c_g	Nm /arcmin (lb_f.in/ arcmin)	3.4 - 5.0 (30 - 44)	9.4 - 12.4 (83 - 110)	22.0 - 29.0 (195 - 257)	61.0 - 76.0 (540 - 673)	155.0 - 218.0 (1372 - 1929)	1
				3.4 - 5.0 (30 - 44)	9.0 - 12.4 (80 - 110)	22.5 - 29.5 (199 - 261)	61.0 - 78.0 (540 - 690)	169.0 - 224.0 (1496 - 1983)	2
	Gearbox weight[2]	m_G	kg (lb_m)	2.0 (4.4)	3.3 - 3.5 (7.4 - 7.7)	6.5 - 7.3 (14.3 - 16.1)	16.0 - 17.6 (35.4 - 38.8)	33.4 - 41.9 (73.6 - 92.5)	1
				2.5 - 2.6 (5.5 - 5.6)	4.1 - 4.3 (9.0 - 9.4)	8.2 - 9.0 (18.1 - 19.8)	21.4 - 22.0 (47.1 - 48.6)	45.4 - 49.6 (100.2 - 109.3)	2
S	Standard surface			Housing: Steel – heat-treated and post-oxidized (black)					
	Running noise[4]	Q_g	dB(A)	60	62	65	70	74	
	Max. bending moment based on the gearbox input flange[5]	M_b	Nm (lb_f.in)	18 (159)	38 (336)	80 (708)	180 (1593)	300 (2655)	

Output shaft loads			PLN070	PLN090	PLN115	PLN142	PLN190	p[1]
Radial force for 20,000 h[6][7]	$F_{r\ 20.000\ h}$	N (lb_f)	3200 (719)	5500 (1236)	6000 (1349)	12500 (2810)	21000 (4721)	
Axial force for 20,000 h[6][7]	$F_{a\ 20.000\ h}$		4400 (989)	6400 (1439)	8000 (1798)	15000 (3372)	21000 (4721)	
Radial force for 30,000 h[6][7]	$F_{r\ 30.000\ h}$		3200 (719)	4800 (1079)	5400 (1214)	11400 (2563)	18000 (4047)	
Axial force for 30,000 h[6][7]	$F_{a\ 30.000\ h}$		3900 (877)	5700 (1281)	7000 (1574)	13200 (2967)	18500 (4159)	
Maximum radial force[7][8]	$F_{r\ Stat}$		3200 (719)	5500 (1236)	6000 (1349)	12500 (2810)	21000 (4721)	
Maximum axial force[7][8]	$F_{a\ Stat}$		4400 (989)	6400 (1439)	8000 (1798)	15000 (3372)	21000 (4721)	
Tilting moment for 20,000 h[6][8]	$M_{K\ 20.000\ h}$	Nm (lb_f.in)	191 (1690)	383 (3390)	488 (4319)	1420 (12568)	2535 (22437)	
Tilting moment for 30,000 h[6][8]	$M_{K\ 30.000\ h}$		191 (1690)	335 (2965)	439 (3885)	1295 (11462)	2173 (19233)	

Moment of inertia			PLN070	PLN090	PLN115	PLN142	PLN190	p[1]
Mass moment of inertia[2]	J	kgcm² (lb_f.in.s²10⁻⁴)	0.216 - 0.365 (1.912 - 3.231)	0.560 - 1.028 (4.956 - 9.099)	1.942 - 3.256 (17.188 - 28.818)	7.008 - 15.270 (62.026 - 135.151)	22.876 - 63.815 (202.470 - 564.810)	1
			0.209 - 0.249 (1.850 - 2.204)	0.544 - 0.699 (4.815 - 6.187)	1.933 - 2.373 (17.108 - 21.003)	6.811 - 9.813 (60.282 - 86.852)	22.430 - 36.003 (198.522 - 318.653)	2

(1) Number of stages
(2) The ratio-dependent values can be retrieved in Tec Data Finder – www.neugart.com
(3) T_{min} = -40°C. Optimal operating temperature max. 50°C
(4) Sound pressure level from 1 m, measured on input running at n_1=3000 rpm no load; i=5
(5) Max. motor weight* in kg = 0.2 x M_b / motor length in m
* with symmetrically distributed motor weight
* with horizontal and stationary mounting
(6) These values are based on an output shaft speed of n_2=100 rpm
(7) Based on center of output shaft
(8) Other (sometimes higher) values following changes to T_{2N}, F_r, F_a, cycle, and service life of bearing. Application specific configuration with NCP – www.neugart.com

Output torques			PLN070	PLN090	PLN115	PLN142	PLN190	i(1)	p(2)
Nominal output torque(3)(4)	T_{2N}	Nm (lb_f.in)	45 (398)	100 (885)	230 (2036)	450 (3983)	1000 (8851)	3	1
			60 (531)	140 (1239)	300 (2655)	600 (5310)	1300 (11506)	4	
			65 (575)	140 (1239)	260 (2301)	750 (6638)	1600 (14161)	5	
			45 (398)	90 (797)	180 (1593)	530 (4691)	1300 (11506)	7	
			40 (354)	80 (708)	150 (1328)	450 (3983)	1000 (8851)	8	
			27 (239)	60 (531)	125 (1106)	305 (2699)	630 (5576)	10	
			68 (602)	110 (974)	250 (2213)	780 (6904)	1500 (13276)	12	2
			68 (602)	110 (974)	250 (2213)	780 (6904)	1500 (13276)	15	
			77 (682)	150 (1328)	300 (2655)	1000 (8851)	1800 (15931)	16	
			77 (682)	150 (1328)	300 (2655)	1000 (8851)	1800 (15931)	20	
			65 (575)	140 (1239)	260 (2301)	900 (7966)	1800 (15931)	25	
			77 (682)	150 (1328)	300 (2655)	1000 (8851)	1800 (15931)	32	
			65 (575)	140 (1239)	260 (2301)	900 (7966)	1800 (15931)	40	
			40 (354)	80 (708)	150 (1328)	450 (3983)	1000 (8851)	64	
			27 (239)	60 (531)	125 (1106)	305 (2699)	630 (5576)	100	
Max. output torque(4)(5)	T_{2max}	Nm (lb_f.in)	72 (637)	160 (1416)	368 (3257)	720 (6373)	1600 (14161)	3	1
			96 (850)	224 (1983)	480 (4248)	960 (8497)	2080 (18410)	4	
			104 (920)	224 (1983)	416 (3682)	1200 (10621)	2560 (22658)	5	
			72 (637)	144 (1275)	288 (2549)	848 (7505)	2080 (18410)	7	
			64 (566)	128 (1133)	240 (2124)	720 (6373)	1600 (14161)	8	
			43 (381)	96 (850)	200 (1770)	488 (4319)	1008 (8922)	10	
			109 (965)	176 (1558)	400 (3540)	1248 (11046)	2400 (21242)	12	2
			109 (965)	176 (1558)	400 (3540)	1248 (11046)	2400 (21242)	15	
			123 (1089)	240 (2124)	480 (4248)	1600 (14161)	2880 (25490)	16	
			123 (1089)	240 (2124)	480 (4248)	1600 (14161)	2880 (25490)	20	
			104 (920)	224 (1983)	416 (3682)	1440 (12745)	2880 (25490)	25	
			123 (1089)	240 (2124)	480 (4248)	1600 (14161)	2880 (25490)	32	
			104 (920)	224 (1983)	416 (3682)	1440 (12745)	2880 (25490)	40	
			64 (566)	128 (1133)	240 (2124)	720 (6373)	1600 (14161)	64	
			43 (381)	96 (850)	200 (1770)	488 (4319)	1008 (8922)	100	

(1) Ratios ($i=n_1/n_2$)
(2) Number of stages
(3) Application specific configuration with NCP – www.neugart.com
(4) Values for feather key (code "A"): for repeated load
(5) 30,000 rotations of the output shaft permitted; see page 166

Output torques			PLN070	PLN090	PLN115	PLN142	PLN190	i[1]	p[2]
Emergency stop torque[3]	T_{2Stop}	Nm (lb_f.in)	90 (797)	210 (1859)	490 (4337)	975 (8629)	2000 (17701)	3	1
			120 (1062)	280 (2478)	650 (5753)	1300 (11506)	2700 (23897)	4	
			130 (1151)	280 (2478)	650 (5753)	1500 (13276)	3200 (28322)	5	
			80 (708)	175 (1549)	340 (3009)	1300 (11506)	2600 (23012)	7	
			90 (797)	200 (1770)	380 (3363)	1000 (8851)	2600 (23012)	8	
			90 (797)	200 (1770)	480 (4248)	750 (6638)	1350 (11949)	10	
			135 (1195)	220 (1947)	500 (4425)	1500 (13276)	3000 (26552)	12	2
			135 (1195)	220 (1947)	500 (4425)	1500 (13276)	3000 (26552)	15	
			150 (1328)	300 (2655)	650 (5753)	2000 (17701)	3600 (31863)	16	
			150 (1328)	300 (2655)	650 (5753)	2000 (17701)	3600 (31863)	20	
			150 (1328)	300 (2655)	650 (5753)	1800 (15931)	3600 (31863)	25	
			150 (1328)	300 (2655)	650 (5753)	2000 (17701)	3600 (31863)	32	
			150 (1328)	300 (2655)	650 (5753)	1800 (15931)	3600 (31863)	40	
			80 (708)	200 (1770)	380 (3363)	1000 (8851)	2600 (23012)	64	
			80 (708)	200 (1770)	480 (4248)	750 (6638)	1350 (11949)	100	

Input speeds			PLN070	PLN090	PLN115	PLN142	PLN190	i[1]	p[2]
Average thermal input speed at T_{2N} and S1[4][5]	n_{1N}	rpm	2050[6]	1950[6]	1500[6]	850[6]	700[6]	3	1
			2300[6]	2100[6]	1600[6]	950[6]	750[6]	4	
			2650[6]	2500[6]	2000[6]	1050[6]	850[6]	5	
			3450[6]	3550[6]	2800[6]	1550[6]	1200[6]	7	
			3800[6]	3950[6]	3200[6]	1800[6]	1450[6]	8	
			4400[6]	4000	3500[6]	2250[6]	1900[6]	10	
			3550[6]	3400[6]	2450[6]	1300[6]	1000[6]	12	2
			4000[6]	4000[6]	3000[6]	1600[6]	1250[6]	15	
			3800[6]	3550[6]	2550[6]	1350[6]	1050[6]	16	
			4300[6]	4000[6]	3050[6]	1600[6]	1300[6]	20	
			4500[6]	4000[6]	3400[6]	1850[6]	1400[6]	25	
			4500	4000	3500[6]	2300[6]	1900[6]	32	
			4500	4000	3500	2550[6]	2100[6]	40	
			4500	4000	3500	3000[6]	2500[6]	64	
			4500	4000	3500	3000	2500	100	
Max. mechanical input speed[4]	n_{1Limit}	rpm	14,000	10,000	8500	6500	6000		

[1] Ratios ($i=n_1/n_2$)
[2] Number of stages
[3] Permitted 1000 times
[4] Application-specific speed configurations with NCP – www.neugart.com
[5] See page 166 for the definition
[6] Average thermal input speed at 50% T_{2N} and S1

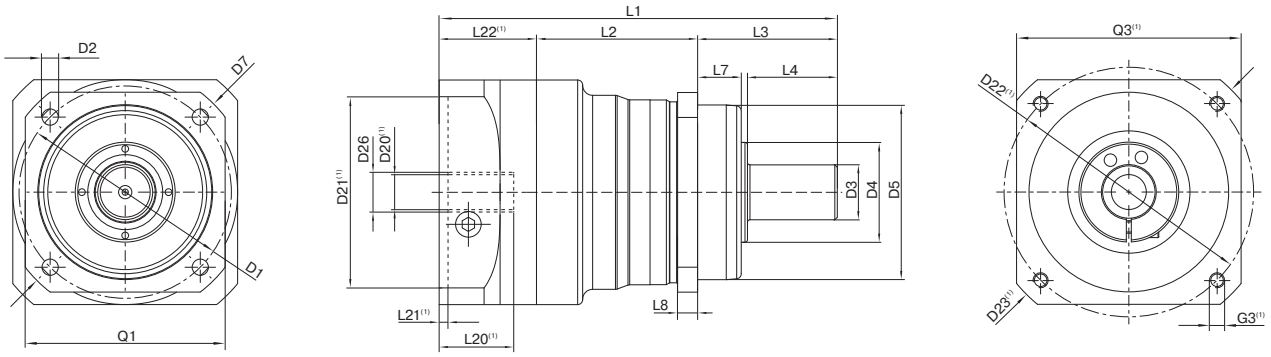

Drawing corresponds to a PLN090 / 1-stage / smooth output shaft / 19 mm clamping system / motor adaptation – 2-part – round universal flange / B5 flange type motor

(1) The dimensions vary with the motor/gearbox flange. The input flange dimensions can be retrieved for each specific motor in Tec Data Finder at www.neugart.com

Geometry(2)			**PLN070**	**PLN090**	**PLN115**	**PLN142**	**PLN190**	**p**(3)	**Code**
Pitch circle diameter output	D1		68 - 75 (2.677 - 2.953)	85 (3.346)	120 (4.724)	165 (6.496)	215 (8.465)		
Mounting bore output	D2	4x	5.5 (0.217)	6.5 (0.256)	9.0 (0.354)	11.0 (0.433)	13.5 (0.531)		
Shaft diameter output	D3	k6	16 (0.630)	22 (0.866)	32 (1.260)	40 (1.575)	55 (2.165)		
Shaft collar output	D4		35 (1.378)	40 (1.575)	45 (1.772)	70 (2.756)	80 (3.150)		
Centering diameter output	D5	g7	60 (2.362)	70 (2.756)	90 (3.543)	130 (5.118)	160 (6.299)		
Diagonal dimension output	D7		92 (3.622)	100 (3.937)	140 (5.512)	185 (7.283)	240 (9.449)		
Flange cross section output	Q1	■	70 (2.756)	80 (3.150)	110 (4.331)	142 (5.591)	190 (7.480)		
Min. total length	L1		137.5 (5.413)	159.5 (6.280)	201 (7.913)	276 (10.866)	310.5 (12.224)	1	
			166.5 (6.555)	191.5 (7.539)	241 (9.488)	335 (13.189)	382.5 (15.059)	2	
Housing length	L2		58,5 (2.303)	64.5 (2.539)	61 (2.402)	91.5 (3.602)	116 (4.567)	1	
			88 (3.465)	96.5 (3.799)	101.5 (3.996)	150.5 (5.925)	188 (7.402)	2	
Centering depth output	L7		19 (0.748)	17.5 (0.689)	28 (1.102)	28 (1.102)	28 (1.102)		
Flange thickness output	L8		7 (0.276)	8 (0.315)	10 (0.394)	12 (0.472)	15 (0.591)		
Motor shaft diameter j6/k6	D20		More information on page 163/164						
Clamping system diameter input	D26								
Output shaft with feather key (DIN 6885-1)			A 5x5x25	A 6x6x28	A 10x8x50	A 12x8x65	A 16x10x70		
Feather key width (DIN 6885-1)	B1		5 (0.197)	6 (0.236)	10 (0.394)	12 (0.472)	16 (0.630)		
Shaft height including feather key (DIN 6885-1)	H1		18 (0.709)	24.5 (0.965)	35 (1.378)	43 (1.693)	59 (2.323)		
Shaft length output	L3		48 (1.890)	56 (2.205)	88 (3.465)	110 (4.331)	112 (4.409)		A
Shaft length from shoulder	L4		28 (1.102)	36 (1.417)	58 (2.283)	80 (3.150)	82 (3.228)		
Feather key length	L5		25 (0.984)	28 (1.102)	50 (1.969)	65 (2.559)	70 (2.756)		
Distance from shaft end	L6		2 (0.079)	4 (0.157)	4 (0.157)	8 (0.315)	6 (0.236)		
Center hole (DIN 332, type DR)	C		M5x12.5	M8x19	M12x28	M16x36	M20x42		
Smooth output shaft									B
Shaft length output	L3		48 (1.890)	56 (2.205)	88 (3.465)	110 (4.331)	112 (4.409)		
Shaft length from shoulder	L4		28 (1.102)	36 (1.417)	58 (2.283)	80 (3.150)	82 (3.228)		
Splined output shaft (DIN 5480)			W16x0.8 x18x6m	W22x1.25 x16x6m	W32x1.25 x24x6m	W40x2.0 x18x6m	W55x2.0 x26x6m		C
Width of gearing	L_v		15 (0.591)	15 (0.591)	15 (0.591)	20 (0.787)	22 (0.866)		
Shaft length output	L3		46 (1.811)	46 (1.811)	56 (2.205)	70 (2.756)	71.5 (2.815)		
Shaft length from shoulder	L4		26 (1.024)	26 (1.024)	26 (1.024)	40 (1.575)	41.5 (1.634)		
Center hole (DIN 332, type DR)	C		M5x12.5	M8x19	M12x28	M16x36	M20x42		

(2) Dimensions in mm
(3) Number of stages



PSFN

The precision planetary gearbox for maximum loads with particularly quiet drive and flange output shaft

Thanks to its standardized flange interface and a planet carrier in a cage design, our **PSFN** is extremely torsionally rigid. The specially developed helical gearing reduces vibrations to a minimum. With its high tilting moment, you can demand a lot from this precision planetary gearbox.

Nominal output torque	**28 - 950 Nm**
Radial force	**2150 - 23000 N**
Axial force	**4300 - 16000 N**
Torsional backlash	**1 - 5 arcmin**
Protection class	**IP65**

Frame sizes

64 **90** **110** **140** **200**



- Precision Line
- Coaxial gearbox
- Helical gear
- Preloaded angular contact roller bearings
- Flange output shaft (ISO 9409-1)
- Option: Reduced backlash
- Equidirectional rotation
- Extra large round type output flange
- Rotary shaft seal
- Planet carrier in cage design
- Option: Planetary gearbox with mounted pinion on page 132

Detailed explanations of the technical features starting on page 173.

Code	Gearbox characteristics			PSFN064	PSFN090	PSFN110	PSFN140	PSFN200	p(1)
	Service life (L_{10h})	t_L	h	20.000					
	Service life at T_{2N} x 0.88			30.000					
	Efficiency at full load(2)	η	%	97					1
				96					2
	Min. operating temperature	T_{min}	°C (°F)	-25 (-13)					
	Max. operating temperature	T_{max}		90 (194)					
	Protection class			IP65					
S	Standard lubrication			Oil (lifetime lubrication)					
F	Food grade lubrication			Oil (lifetime lubrication)					
L	Low temperature lubrication(3)			Oil (lifetime lubrication)					
	Installation position			Any					
S	Standard backlash	j_t	arcmin	< 3					1
				< 5					2
R	Reduced backlash			< 2	< 1	< 1	< 1	< 1	
	Torsional stiffness(2)	c_g	Nm /arcmin (lb_f.in/ arcmin)	8.2 - 11.8 (73 - 104)	21.0 - 27.5 (186 - 243)	55.0 - 62.0 (487 - 549)	129.0 - 218.0 (1142 - 1929)	374.0 - 602.0 (3310 - 5328)	1
				8.2 - 13.3 (73 - 118)	21.0 - 31.0 (186 - 274)	64.0 - 81.0 (566 - 717)	127.0 - 201.0 (1124 - 1779)	365.0 - 668.0 (3231 - 5912)	2
	Gearbox weight(2)	m_G	kg (lb_m)	1.4 (3.0)	3.0 (6.6)	5.0 - 5.2 (11.0 - 11.4)	11.7 - 12.0 (25.8 - 26.4)	28.5 - 29.5 (62.9 - 65.1)	1
				2.0 - 2.1 (4.4 - 4.6)	3.6 - 3.7 (7.9 - 8.0)	6.3 - 6.5 (13.9 - 14.3)	13.4 - 13.8 (29.6 - 30.5)	33.6 - 34.8 (74.0 - 76.8)	2
S	Standard surface			Housing: Steel – heat-treated and post-oxidized (black)					
	Running noise(4)	Q_g	dB(A)	57	58	63	66	68	
	Max. bending moment based on the gearbox input flange(5)	M_b	Nm (lb_f.in)	18 (159)	38 (336)	80 (708)	180 (1593)	300 (2655)	1
				18 (159)	18 (159)	38 (336)	80 (708)	180 (1593)	2

Output shaft loads			PSFN064	PSFN090	PSFN110	PSFN140	PSFN200	p(1)
Radial force for 20.000 h(6)(7)	$F_{r\,20.000\,h}$	N (lb_f)	2150 (483)	3950 (888)	4900 (1102)	12000 (2698)	23000 (5171)	
Axial force for 20.000 h(6)(7)	$F_{a\,20.000\,h}$		4300 (967)	8200 (1843)	9500 (2136)	8500 (1911)	16000 (3597)	
Radial force for 30.000 h(6)(7)	$F_{r\,30.000\,h}$		1900 (427)	3500 (787)	4350 (978)	11000 (2473)	21000 (4721)	
Axial force for 30.000 h(6)(7)	$F_{a\,30.000\,h}$		3800 (854)	7200 (1619)	8400 (1888)	7500 (1686)	14000 (3147)	
Maximum radial force(7)(8)	$F_{r\,Stat}$		2150 (483)	3950 (888)	4900 (1102)	12000 (2698)	23000 (5171)	
Maximum axial force(7)(8)	$F_{a\,Stat}$		4300 (967)	8200 (1843)	9500 (2136)	8500 (1911)	16000 (3597)	
Tilting moment for 20.000 h(6)(8)	$M_{K\,20.000\,h}$	Nm (lb_f.in)	132 (1168)	326 (2885)	475 (4204)	1030 (9116)	2445 (21640)	
Tilting moment for 30.000 h(6)(8)	$M_{K\,30.000\,h}$		117 (1036)	289 (2558)	422 (3735)	944 (8355)	2232 (19755)	

Moment of inertia			PSFN064	PSFN090	PSFN110	PSFN140	PSFN200	p(1)
Mass moment of inertia(2)	J	kgcm² (lb_f.in.s²10⁻⁴)	0.128 - 0.188 (1.133 - 1.664)	0.342 - 0.611 (3.027 - 5.408)	0.892 - 1.741 (7.895 - 15.409)	6.526 - 9.670 (57.760 - 85.587)	22.520 - 40.642 (199.319 - 359.712)	1
			0.124 - 0.180 (1.097 - 1.593)	0.125 - 0.197 (1.106 - 1.744)	0.325 - 0.587 (2.876 - 5.195)	0.853 - 1.836 (7.550 - 16.250)	6.434 - 10.410 (56.946 - 92.136)	2

(1) Number of stages
(2) The ratio-dependent values can be retrieved in Tec Data Finder – www.neugart.com
(3) T_{min} = -40°C. Optimal operating temperature max. 50°C
(4) Sound pressure level from 1 m. measured on input running at n_1=3000 rpm no load; i=5
(5) Max. motor weight* in kg = 0.2 x M_b / motor length in m
* with symmetrically distributed motor weight
* with horizontal and stationary mounting
(6) These values are based on an output shaft speed of n_2=100 rpm
(7) Based on the end of the output shaft
(8) Other (sometimes higher) values following changes to T_{2N}. F_r. F_a. cycle. and service life of bearing. Application specific configuration with NCP – www.neugart.com

Output torques			PSFN064	PSFN090	PSFN110	PSFN140	PSFN200	i(1)	p(2)
Nominal output torque(3)	T_{2N}	Nm (lb_f.in)	39 (345)	80 (708)	180 (1593)	470 (4160)	950 (8408)	4	1
			40 (354)	80 (708)	175 (1549)	405 (3585)	950 (8408)	5	
			37 (327)	78 (690)	175 (1549)	355 (3142)	900 (7966)	7	
			39 (345)	75 (664)	155 (1372)	350 (3098)	-	8	
			28 (248)	59 (522)	140 (1239)	305 (2699)	750 (6638)	10	
			39 (345)	80 (708)	180 (1593)	450 (3983)	950 (8408)	16	2
			39 (345)	80 (708)	180 (1593)	450 (3983)	950 (8408)	20	
			40 (354)	80 (708)	175 (1549)	405 (3585)	950 (8408)	25	
			40 (354)	80 (708)	175 (1549)	405 (3585)	950 (8408)	35	
			39 (345)	80 (708)	180 (1593)	470 (4160)	950 (8408)	40	
			40 (354)	80 (708)	175 (1549)	405 (3585)	950 (8408)	50	
			37 (327)	78 (690)	175 (1549)	355 (3142)	900 (7966)	70	
			28 (248)	59 (522)	140 (1239)	305 (2699)	750 (6638)	100	
Max. output torque(4)	T_{2max}	Nm (lb_f.in)	62 (549)	128 (1133)	288 (2549)	752 (6656)	1520 (13453)	4	1
			64 (566)	128 (1133)	280 (2478)	648 (5735)	1520 (13453)	5	
			59 (522)	125 (1106)	280 (2478)	568 (5027)	1440 (12745)	7	
			62 (549)	120 (1062)	248 (2195)	560 (4956)	-	8	
			45 (398)	94 (832)	224 (1983)	488 (4319)	1200 (10621)	10	
			62 (549)	128 (1133)	288 (2549)	720 (6373)	1520 (13453)	16	2
			62 (549)	128 (1133)	288 (2549)	720 (6373)	1520 (13453)	20	
			64 (566)	128 (1133)	280 (2478)	648 (5735)	1520 (13453)	25	
			64 (566)	128 (1133)	280 (2478)	648 (5735)	1520 (13453)	35	
			62 (549)	128 (1133)	288 (2549)	752 (6656)	1520 (13453)	40	
			64 (566)	128 (1133)	280 (2478)	648 (5735)	1520 (13453)	50	
			59 (522)	125 (1106)	280 (2478)	568 (5027)	1440 (12745)	70	
			45 (398)	94 (832)	224 (1983)	488 (4319)	1200 (10621)	100	

(1) Ratios ($i=n_1/n_2$)
(2) Number of stages
(3) Application specific configuration with NCP – www.neugart.com
(4) 30.000 rotations of the output shaft permitted; see page 166

Output torques			PSFN064	PSFN090	PSFN110	PSFN140	PSFN200	i[1]	p[2]
Emergency stop torque[3]	T_{2Stop}	Nm (lb_f.in)	120 (1062)	280 (2478)	650 (5753)	1650 (14604)	3200 (28322)	4	1
			130 (1151)	280 (2478)	650 (5753)	1650 (14604)	3200 (28322)	5	
			80 (708)	175 (1549)	340 (3009)	1300 (11506)	3200 (28322)	7	
			90 (797)	200 (1770)	380 (3363)	1100 (9736)	-	8	
			90 (797)	200 (1770)	480 (4248)	600 (5310)	1700 (15046)	10	
			150 (1328)	300 (2655)	650 (5753)	1650 (14604)	3200 (28322)	16	2
			150 (1328)	300 (2655)	650 (5753)	1650 (14604)	3200 (28322)	20	
			150 (1328)	300 (2655)	650 (5753)	1650 (14604)	3200 (28322)	25	
			150 (1328)	300 (2655)	650 (5753)	1650 (14604)	3200 (28322)	35	
			150 (1328)	300 (2655)	650 (5753)	1650 (14604)	3200 (28322)	40	
			150 (1328)	300 (2655)	650 (5753)	1650 (14604)	3200 (28322)	50	
			80 (708)	175 (1549)	340 (3009)	1300 (11506)	3200 (28322)	70	
			90 (797)	200 (1770)	480 (4248)	600 (5310)	1700 (15046)	100	

Input speeds			PSFN064	PSFN090	PSFN110	PSFN140	PSFN200	i[1]	p[2]
Average thermal input speed at T_{2N} and S1[4][5]	n_{1N}	rpm	3200[6]	2400[6]	1800[6]	1100[6]	750[6]	4	1
			3800[6]	2950[6]	2250[6]	1350[6]	950[6]	5	
			4500	3800[6]	2950[6]	1800[6]	1250[6]	7	
			4500	4000[6]	3300[6]	1950[6]	-	8	
			4500	4000	3500	2300[6]	1700[6]	10	
			4500	4500	3800[6]	2450[6]	1550[6]	16	2
			4500	4500	4000	3050[6]	1900[6]	20	
			4500	4500	4000	3350[6]	2050[6]	25	
			4500	4500	4000	3500	2650[6]	35	
			4500	4500	4000	3500	3000[6]	40	
			4500	4500	4000	3500	3000	50	
			4500	4500	4000	3500	3000	70	
			4500	4500	4000	3500	3000	100	
Max. mechanical input speed[4]	n_{1Limit}	rpm	14,000	10,000	8500	6500	6000		1
			14,000	14,000	10,000	8500	6500		2

[1] Ratios ($i=n_1/n_2$)
[2] Number of stages
[3] Permitted 1000 times
[4] Application-specific speed configurations with NCP – www.neugart.com
[5] See page 166 for the definition
[6] Average thermal input speed at 50% T_{2N} and S1

PSFN064
PSFN090

PSFN110

PSFN140
PSFN200

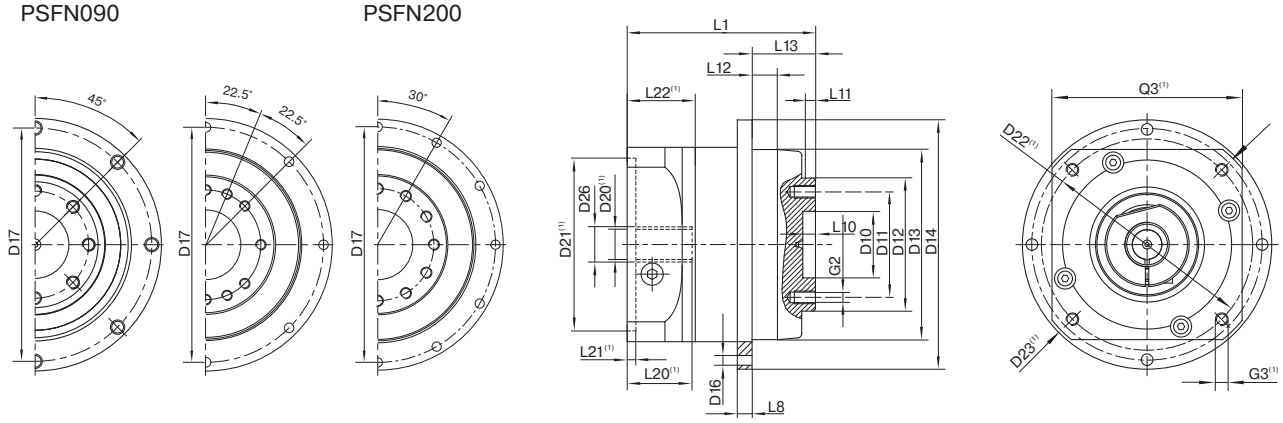

Drawing corresponds to a PSFN090 / 1-stage / flange output shaft / 14 mm clamping system / motor adaptation – 2-part – round universal flange / B5 flange type motor

(1) The dimensions vary with the motor/gearbox flange. The input flange dimensions can be retrieved for each specific motor in Tec Data Finder at www.neugart.com

Geometry(2)			**PSFN064**	**PSFN090**	**PSFN110**	**PSFN140**	**PSFN200**	**p**(3)	**Code**
Centering diameter output shaft	D10	H7	20 (0.787)	31.5 (1.240)	40 (1.575)	50 (1.969)	80 (3.150)		
Pitch circle diameter output shaft	D11		31.5 (1.240)	50 (1.969)	63 (2.480)	80 (3.150)	125 (4.921)		
Flange output shaft diameter	D12	h7	40 (1.575)	63 (2.480)	80 (3.150)	100 (3.937)	160 (6.299)		
Centering diameter output flange	D13		64 (2.520)	90 (3.543)	110 (4.331)	140 (5.512)	200 (7.874)		
Flange diameter output	D14		86 (3.386)	118 (4.646)	145 (5.709)	179 (7.047)	247 (9.724)		
Mounting bore output	D16		4.5 8x45°	5.5 8x45°	5.5 8x45°	6.6 12x30°	9 12x30°		
Pitch circle diameter output flange	D17		79 (3.110)	109 (4.291)	135 (5.315)	168 (6.614)	233 (9.173)		
Min. total length	L1		71 (2.795)	89.5 (3.524)	108 (4.252)	142 (5.591)	172 (6.772)	1	
			99.5 (3.917)	111.5 (4.390)	130 (5.118)	173 (6.811)	217 (8.543)	2	
Flange thickness output	L8		4 (0.157)	7 (0.276)	8 (0.315)	10 (0.394)	12 (0.472)		
Centering depth output shaft	L10		4.5 (0.177)	6.5 (0.256)	6.5 (0.256)	6.5 (0.256)	10 (0.394)		
	L11		3 (0.118)	6 (0.236)	6 (0.236)	6 (0.236)	7 (0.276)		
Centering depth output flange	L12		10 (0.394)	12 (0.472)	12 (0.472)	14 (0.551)	17.5 (0.689)		
Output flange length	L13		19.5 (0.760)	30.0 (1.181)	29.0 (1.142)	38.0 (1.496)	50.0 (1.969)		
Motor shaft diameter j6/k6	D20		More information on page 163/164						
Clamping system diameter input	D26								
Flange output shaft (similar ISO 9409-1)									**D**
Number x thread x depth	G2		8 x M5x7	8 x M6x10	12 x M6x12	12 x M8x15	12 x M10x20		
Flange output shaft with dowel hole (ISO 9409-1)									**E**
Dowel hole x depth	D15	H7	5x5	6x6	6x6	8x8	10x10		
Number x thread x depth	G2		7 x M5x7	7 x M6x10	11 x M6x12	11 x M8x15	11 x M10x20		

(2) Dimensions in mm
(3) Number of stages



PLFN

The precision planetary gearbox for maximum loads and the highest performance – fast and easy to install

Our **PLFN** has a standardized flange interface, which allows easy mounting. The straight-toothed precision planetary gearbox is designed for high performance and torque. Its high tilting moment allows the best performance even with the highest radial and axial forces.

Nominal output torque	**27 - 1800 Nm**
Radial force	**2150 - 33000 N**
Axial force	**4300 - 15000 N**
Torsional backlash	**1 - 5 arcmin**
Protection class	**IP65**

Frame sizes

64 **90** **110** **140** **200**



- Precision Line
- Coaxial gearbox
- Spur gear
- Preloaded angular contact roller bearings
- Flange output shaft (ISO 9409-1)
- Option: Reduced backlash
- Equidirectional rotation
- Extra large round type output flange
- Rotary shaft seal
- Planet carrier in cage design
- Option: Planetary gearbox with mounted pinion on page 132

Detailed explanations of the technical features starting on page 173.

Code	Gearbox characteristics			PLFN064	PLFN090	PLFN110	PLFN140	PLFN200	p(1)
	Service life (L_{10h})	t_L	h	20,000					
	Service life at T_{2N} x 0,88			30,000					
	Efficiency at full load(2)	η	%	97					1
				96					2
	Min. operating temperature	T_{min}	°C (°F)	-25 (-13)					
	Max. operating temperature	T_{max}		90 (194)					
	Protection class			IP65					
S	Standard lubrication			Oil (lifetime lubrication)					
F	Food grade lubrication			Oil (lifetime lubrication)					
L	Low temperature lubrication(3)			Oil (lifetime lubrication)					
	Installation position			Any					
S	Standard backlash	j_t	arcmin	< 3					1
				< 5					2
R	Reduced backlash			< 2	< 1	< 1	< 1	< 1	
	Torsional stiffness(2)	c_g	Nm /arcmin (lb_f.in/arcmin)	7.7 - 14.8 (68 - 131)	22.0 - 40.5 (195 - 358)	59.0 - 92.0 (522 - 814)	156.0 - 255.0 (1381 - 2257)	330.0 - 636.0 (2921 - 5629)	1
				7.6 - 14.7 (67 - 130)	18.5 - 38.0 (164 - 336)	58.0 - 91.0 (513 - 805)	177.0 - 264.0 (1567 - 2337)	391.0 - 656.0 (3461 - 5806)	2
	Gearbox weight(2)	m_G	kg (lb_m)	1.3 - 1.4 (2.9 - 3.1)	2.9 - 3.0 (6.5 - 6.6)	5.0 - 5.3 (11.0 - 11.7)	12.9 - 13.5 (28.4 - 29.7)	37.0 - 39.2 (81.6 - 86.3)	1
				1.9 (4.2)	3.4 - 3.5 (7.5 - 7.8)	6.0 - 6.3 (13.1 - 13.8)	15.0 - 15.6 (33.0 - 34.4)	43.5 - 45.9 (96.0 - 101.3)	2
S	Standard surface			Housing: Steel – heat-treated and post-oxidized (black)					
	Running noise(4)	Q_g	dB(A)	60	62	65	70	74	
	Max. bending moment based on the gearbox input flange(5)	M_b	Nm (lb_f.in)	18 (159)	38 (336)	80 (708)	180 (1593)	300 (2655)	1
				18 (159)	18 (159)	38 (336)	80 (708)	180 (1593)	2

Output shaft loads			PLFN064	PLFN090	PLFN110	PLFN140	PLFN200	p(1)
Radial force for 20,000 h(6)(7)	$F_{r\,20.000\,h}$	N (lb_f)	2150 (483)	3950 (888)	4900 (1102)	12000 (2698)	33000 (7419)	
Axial force for 20,000 h(6)(7)	$F_{a\,20.000\,h}$		4300 (967)	8200 (1843)	9500 (2136)	8500 (1911)	15000 (3372)	
Radial force for 30,000 h(6)(7)	$F_{r\,30.000\,h}$		1900 (427)	3500 (787)	4350 (978)	11000 (2473)	29500 (6632)	
Axial force for 30,000 h(6)(7)	$F_{a\,30.000\,h}$		3800 (854)	7200 (1619)	8400 (1888)	7500 (1686)	13500 (3035)	
Maximum radial force(7)(8)	$F_{r\,Stat}$		2150 (483)	3950 (888)	4900 (1102)	12000 (2698)	33000 (7419)	
Maximum axial force(7)(8)	$F_{a\,Stat}$		4300 (967)	8200 (1843)	9500 (2136)	8500 (1911)	15000 (3372)	
Tilting moment for 20,000 h(6)(8)	$M_{K\,20.000\,h}$	Nm (lb_f.in)	132 (1168)	326 (2885)	475 (4204)	1219 (10789)	4957 (43873)	
Tilting moment for 30,000 h(6)(8)	$M_{K\,30.000\,h}$		117 (1036)	289 (2558)	422 (3735)	1117 (9886)	4431 (39218)	

Moment of inertia			PLFN064	PLFN090	PLFN110	PLFN140	PLFN200	p(1)
Mass moment of inertia(2)	J	kgcm² (lb_f.in.s²10⁻⁴)	0.217 - 0.288 (1.921 - 2.549)	0.580 - 0.920 (5.133 - 8.143)	2.036 - 2.942 (18.020 - 26.039)	7.313 - 12.365 (64.726 - 109.439)	26.880 - 61.170 (237.908 - 541.400)	1
			0.209 - 0.243 (1.850 - 2.151)	0.211 - 0.269 (1.868 - 2.381)	0.546 - 0.737 (4.833 - 6.523)	1.951 - 2.784 (17.268 - 24.640)	6.911 - 11.813 (61.168 - 104.554)	2

(1) Number of stages
(2) The ratio-dependent values can be retrieved in Tec Data Finder – www.neugart.com
(3) T_{min} = -40°C. Optimal operating temperature max. 50°C
(4) Sound pressure level from 1 m, measured on input running at n_1=3000 rpm no load; i=5
(5) Max. motor weight* in kg = 0.2 x M_b / motor length in m
* with symmetrically distributed motor weight
* with horizontal and stationary mounting
(6) These values are based on an output shaft speed of n_2=100 rpm
(7) Based on the end of the output shaft
(8) Other (sometimes higher) values following changes to T_{2N}, F_r, F_a, cycle, and service life of bearing. Application specific configuration with NCP – www.neugart.com

Output torques			PLFN064	PLFN090	PLFN110	PLFN140	PLFN200	i(1)	p(2)
Nominal output torque(3)	T_{2N}	Nm (lb_f.in)	60 (531)	140 (1239)	300 (2655)	600 (5310)	1300 (11506)	4	1
			65 (575)	140 (1239)	260 (2301)	750 (6638)	1600 (14161)	5	
			45 (398)	90 (797)	180 (1593)	530 (4691)	1300 (11506)	7	
			40 (354)	80 (708)	150 (1328)	450 (3983)	1000 (8851)	8	
			27 (239)	60 (531)	125 (1106)	305 (2699)	630 (5576)	10	
			77 (682)	150 (1328)	300 (2655)	1000 (8851)	1800 (15931)	16	2
			77 (682)	150 (1328)	300 (2655)	1000 (8851)	1800 (15931)	20	
			65 (575)	140 (1239)	260 (2301)	900 (7966)	1800 (15931)	25	
			77 (682)	150 (1328)	300 (2655)	600 (5310)	1800 (15931)	32	
			65 (575)	140 (1239)	260 (2301)	750 (6638)	1800 (15931)	40	
			65 (575)	130 (1151)	260 (2301)	620 (5487)	1525 (13497)	50	
			40 (354)	80 (708)	150 (1328)	450 (3983)	1000 (8851)	64	
			27 (239)	60 (531)	125 (1106)	305 (2699)	630 (5576)	100	
Max. output torque(4)	T_{2max}	Nm (lb_f.in)	96 (850)	224 (1983)	480 (4248)	960 (8497)	2080 (18410)	4	1
			104 (920)	224 (1983)	416 (3682)	1200 (10621)	2560 (22658)	5	
			72 (637)	144 (1275)	288 (2549)	848 (7505)	2080 (18410)	7	
			64 (566)	128 (1133)	240 (2124)	720 (6373)	1600 (14161)	8	
			43 (381)	96 (850)	200 (1770)	488 (4319)	1008 (8922)	10	
			123 (1089)	240 (2124)	480 (4248)	1600 (14161)	2880 (25490)	16	2
			123 (1089)	240 (2124)	480 (4248)	1600 (14161)	2880 (25490)	20	
			104 (920)	224 (1983)	416 (3682)	1440 (12745)	2880 (25490)	25	
			123 (1089)	240 (2124)	480 (4248)	960 (8497)	2880 (25490)	32	
			104 (920)	224 (1983)	416 (3682)	1200 (10621)	2880 (25490)	40	
			104 (920)	208 (1841)	416 (3682)	992 (8780)	2440 (21596)	50	
			64 (566)	128 (1133)	240 (2124)	720 (6373)	1600 (14161)	64	
			43 (381)	96 (850)	200 (1770)	488 (4319)	1008 (8922)	100	

(1) Ratios ($i=n_1/n_2$)
(2) Number of stages
(3) Application specific configuration with NCP – www.neugart.com
(4) 30,000 rotations of the output shaft permitted; see page 166

Output torques			PLFN064	PLFN090	PLFN110	PLFN140	PLFN200	i[1]	p[2]
Emergency stop torque[3]	T_{2Stop}	Nm (lb_f.in)	120 (1062)	280 (2478)	650 (5753)	1300 (11506)	2700 (23897)	4	1
			130 (1151)	280 (2478)	650 (5753)	1500 (13276)	3200 (28322)	5	
			90 (797)	175 (1549)	340 (3009)	1300 (11506)	2600 (23012)	7	
			90 (797)	200 (1770)	380 (3363)	1000 (8851)	2600 (23012)	8	
			90 (797)	200 (1770)	480 (4248)	750 (6638)	1350 (11949)	10	
			150 (1328)	300 (2655)	650 (5753)	2000 (17701)	3600 (31863)	16	2
			150 (1328)	300 (2655)	650 (5753)	2000 (17701)	3600 (31863)	20	
			150 (1328)	300 (2655)	650 (5753)	1800 (15931)	3600 (31863)	25	
			150 (1328)	300 (2655)	650 (5753)	1500 (13276)	3600 (31863)	32	
			150 (1328)	300 (2655)	650 (5753)	1500 (13276)	3600 (31863)	40	
			150 (1328)	300 (2655)	650 (5753)	1500 (13276)	3600 (31863)	50	
			80 (708)	200 (1770)	380 (3363)	1000 (8851)	2600 (23012)	64	
			80 (708)	200 (1770)	480 (4248)	750 (6638)	1350 (11949)	100	

Input speeds			PLFN064	PLFN090	PLFN110	PLFN140	PLFN200	i[1]	p[2]
Average thermal input speed at T_{2N} and S1[4][5]	n_{1N}	rpm	2100[6]	1750[6]	1300[6]	850[6]	500[6]	4	1
			2450[6]	2100[6]	1650[6]	950[6]	600[6]	5	
			3200[6]	3000[6]	2350[6]	1400[6]	850[6]	7	
			3550[6]	3350[6]	2650[6]	1650[6]	1000[6]	8	
			4100[6]	4000[6]	3150[6]	2050[6]	1300[6]	10	
			3700[6]	3850[6]	3150[6]	1700[6]	1100[6]	16	2
			4200[6]	4450[6]	3750[6]	2100[6]	1350[6]	20	
			4500[6]	4500[6]	4000[6]	2500[6]	1550[6]	25	
			4500[6]	4500	4000	3500[6]	2000[6]	32	
			4500	4500	4000	3500[6]	2250[6]	40	
			4500	4500	4000	3500	2750[6]	50	
			4500	4500	4000	3500	3000[6]	64	
			4500	4500	4000	3500	3000	100	
Max. mechanical input speed[4]	n_{1Limit}	rpm	14,000	10,000	8500	6500	6000		1
			14,000	14,000	10,000	8500	6500		2

[1] Ratios ($i=n_1/n_2$)
[2] Number of stages
[3] Permitted 1000 times
[4] Application-specific speed configurations with NCP – www.neugart.com
[5] See page 166 for the definition
[6] Average thermal input speed at 50% T_{2N} and S1

PLFN064
PLFN090

PLFN110

PLFN140
PLFN200

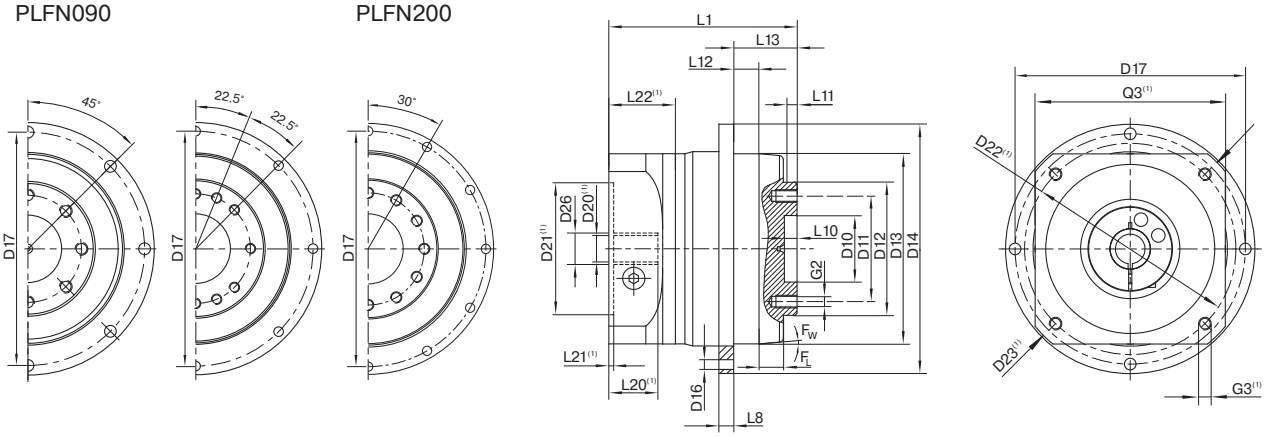

Drawing corresponds to a PLFN090 / 1-stage / flange output shaft / 19 mm clamping system / motor adaptation – 2-part – round universal flange / B5 flange type motor

(1) The dimensions vary with the motor/gearbox flange. The input flange dimensions can be retrieved for each specific motor in Tec Data Finder at www.neugart.com

Geometry(2)			**PLFN064**	**PLFN090**	**PLFN110**	**PLFN140**	**PLFN200**	**p**(3)	**Code**
Centering diameter output shaft	D10	H7	20 (0.787)	31.5 (1.240)	40 (1.575)	50 (1.969)	80 (3.150)		
Pitch circle diameter output shaft	D11		31.5 (1.240)	50 (1.969)	63 (2.480)	80 (3.150)	125 (4.921)		
Flange output shaft diameter	D12	h7	40 (1.575)	63 (2.480)	80 (3.150)	100 (3.937)	160 (6.299)		
Centering diameter output flange	D13		64 (2.520)	90 (3.543)	110 (4.331)	140 (5.512)	200 (7.874)		
Flange diameter output	D14		86 (3.386)	118 (4.646)	145 (5.709)	179 (7.047)	247 (9.724)		
Mounting bore output	D16		4.5 8x45°	5.5 8x45°	5.5 8x45°	6.6 12x30°	9 12x30°		
Pitch circle diameter output flange	D17		79 (3.110)	109 (4.291)	135 (5.315)	168 (6.614)	233 (9.173)		
Min. total length	L1		71 (2.795)	89 (3.504)	108 (4.252)	157 (6.181)	212.5 (8.366)	1	
			99.5 (3.917)	111 (4.370)	130 (5.118)	187.5 (7.382)	264 (10.394)	2	
Flange thickness output	L8		4 (0.157)	7 (0.276)	8 (0.315)	10 (0.394)	12 (0.472)		
Centering depth output shaft	L10		4.5 (0.177)	6.5 (0.256)	6.5 (0.256)	6.5 (0.256)	10 (0.394)		
	L11		3 (0.118)	6 (0.236)	6 (0.236)	6 (0.236)	8 (0.315)		
Centering depth output flange	L12		10 (0.394)	12 (0.472)	12 (0.472)	14 (0.551)	17.5 (0.689)		
Output flange length	L13		19.5 (0.760)	30.0 (1.181)	29.0 (1.142)	38.0 (1.496)	50.0 (1.969)		
Motor shaft diameter j6/k6	D20		More information on page 163/164						
Clamping system diameter input	D26								
Flange output shaft (similar ISO 9409-1)									**D**
Number x thread x depth	G2		8 x M5x7	8 x M6x10	12 x M6x12	12 x M8x15	12 x M10x20		
Flange output shaft with dowel hole (ISO 9409-1)									
Dowel hole x depth	D15	H7	5x5	6x6	6x6	8x8	10x10		**E**
Number x thread x depth	G2		7 x M5x7	7 x M6x10	11 x M6x12	11 x M8x15	11 x M10x20		

(2) Dimensions in mm
(3) Number of stages



WPLN

The versatile right-angle gearbox with hypoid gearing for a quiet drive

Due to its hypoid gearing, our **WPLN** achieves optimal synchronization. Because vibrations are reduced to a minimum, it operates smoothly, precisely and quietly. The right-angle precision gearbox is lubricated for life and can be mounted in a variety of ways.

Nominal output torque	**22 - 800 Nm**
Radial force	**3200 - 12500 N**
Axial force	**4300 - 15000 N**
Torsional backlash	**3 - 5 arcmin**
Protection class	**IP65**

Frame sizes

70 **90** **115** **142**

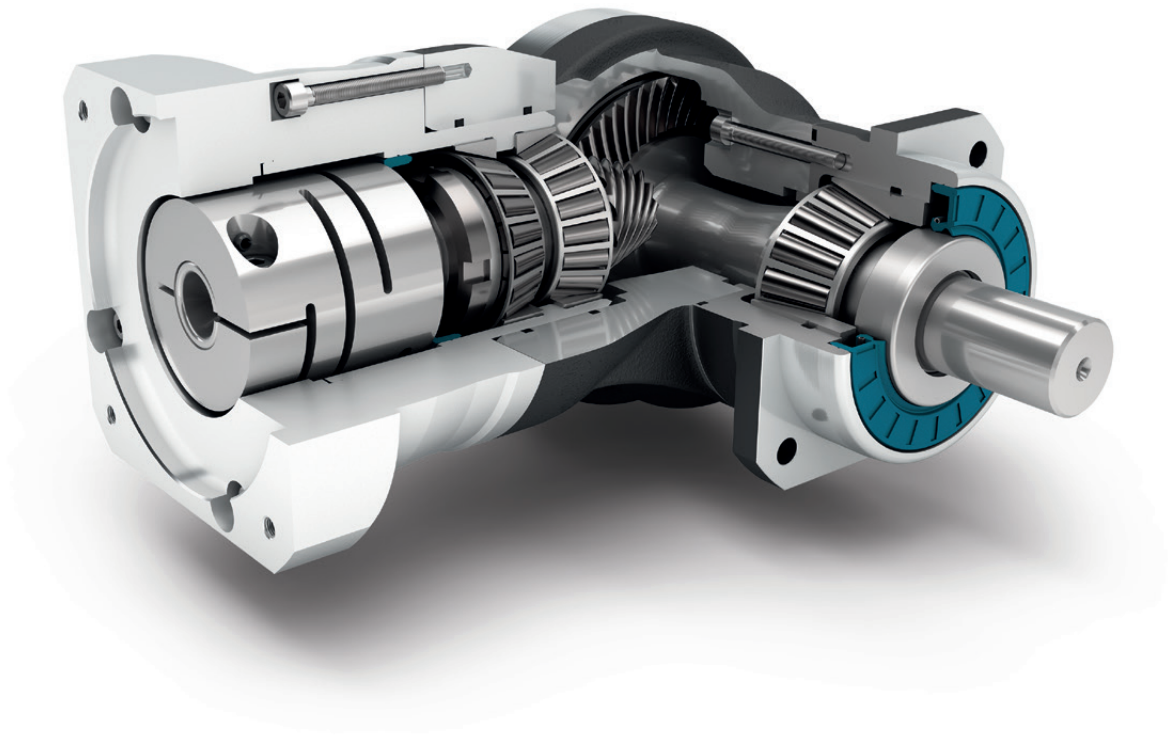

- Precision Line
- Counterdirectional rotation
- Square type output flange
- Rotary shaft seal
- Option: Reduced backlash (2-stage)
- Right angle gearbox
- Hypoid gear right angle stage
- Preloaded tapered roller bearings
- Extra long centering collar
- Option: Planetary gearbox with mounted pinion on page 132

Detailed explanations of the technical features starting on page 173.

Code	Gearbox characteristics			WPLN070	WPLN090	WPLN115	WPLN142	p(1)
	Service life (L_{10h})	t_L	h	20,000				
	Service life at T_{2N} x 0,88			30,000				
	Efficiency at full load(2)	η	%	95				1
				94				2
	Min. operating temperature	T_{min}	°C (°F)	-25 (-13)				
	Max. operating temperature	T_{max}		90 (194)				
	Protection class			IP65				
S	Standard lubrication			Oil (lifetime lubrication)				
F	Food grade lubrication			Oil (lifetime lubrication)				
	Installation position			Any				
S	Standard backlash	j_t	arcmin	< 5				
R	Reduced backlash			-				1
				< 3				2
	Torsional stiffness(2)	c_g	Nm /arcmin (lb_f.in/ arcmin)	1.8 - 3.1 (16 - 27)	4.6 - 7.0 (41 - 62)	8.6 - 13.5 (76 - 119)	24.5 - 34.0 (217 - 301)	1
				2.3 - 3.6 (20 - 32)	5.9 - 8.6 (52 - 76)	11.3 - 16.9 (100 - 150)	31.5 - 42.5 (279 - 376)	2
	Gearbox weight(2)	m_G	kg (lb_m)	3.4 (7.5)	5.4 - 5.9 (12.0 - 12.9)	11.3 (24.9)	25.9 - 26.5 (57.2 - 58.4)	1
				4.4 - 4.5 (9.7 - 9.8)	5.8 - 5.9 (12.7 - 13.0)	10.4 - 10.7 (22.8 - 23.5)	24.6 - 25.2 (54.3 - 55.5)	2
S	Standard surface			Right angle housing: Aluminum – anodized (black)				
	Running noise(3)	Q_g	dB(A)	66	67	68	70	
	Max. bending moment based on the gearbox input flange(4)	M_b	Nm (lb_f.in)	12 (106)	25.5 (226)	53 (469)	120 (1062)	1
				12 (106)	12 (106)	25.5 (226)	53 (469)	2

Output shaft loads			WPLN070	WPLN090	WPLN115	WPLN142	p(1)
Radial force for 20,000 h(5)(6)	$F_{r\,20.000\,h}$	N (lb_f)	3200 (719)	5200 (1169)	6000 (1349)	12500 (2810)	1
			3200 (719)	5500 (1236)	6000 (1349)	12500 (2810)	2
Axial force for 20,000 h(5)(6)	$F_{a\,20.000\,h}$		4300 (967)	5900 (1326)	7000 (1574)	14500 (3260)	1
			4400 (989)	6400 (1439)	8000 (1798)	15000 (3372)	2
Radial force for 30,000 h(5)(6)	$F_{r\,30.000\,h}$		3200 (719)	5200 (1169)	6000 (1349)	10900 (2450)	1
			3200 (719)	4800 (1079)	5400 (1214)	11400 (2563)	2
Axial force for 30,000 h(5)(6)	$F_{a\,30.000\,h}$		3700 (832)	5200 (1169)	6100 (1371)	12000 (2698)	1
			3900 (877)	5700 (1281)	7000 (1574)	13200 (2967)	2
Maximum radial force(6)(7)	$F_{r\,Stat}$		3200 (719)	5200 (1169)	6000 (1349)	12500 (2810)	1
			3200 (719)	5500 (1236)	6000 (1349)	12500 (2810)	2
Maximum axial force(6)(7)	$F_{a\,Stat}$		4300 (967)	5900 (1326)	7000 (1574)	14500 (3260)	1
			4400 (989)	6400 (1439)	8000 (1798)	15000 (3372)	2
Tilting moment for 20,000 h(5)(7)	$M_{K\,20.000\,h}$	Nm (lb_f.in)	322 (2850)	624 (5523)	1010 (8939)	2225 (19693)	1
			322 (2850)	660 (5841)	1010 (8939)	2225 (19693)	2
Tilting moment for 30,000 h(5)(7)	$M_{K\,30.000\,h}$		322 (2850)	624 (5523)	1010 (8939)	1940 (17170)	1
			322 (2850)	576 (5098)	909 (8045)	2029 (17958)	2

Moment of inertia			WPLN070	WPLN090	WPLN115	WPLN142	p(1)
Mass moment of inertia(2)	J	$kgcm^2$ ($lb_f.in.s^2 10^{-4}$)	0.500 - 0.658 (4.425 - 5.824)	1.013 - 1.387 (8.966 - 12.276)	4.767 - 5.875 (42.192 - 51.998)	15.090 - 20.883 (133.558 - 184.830)	1
			0.498 - 0.642 (4.408 - 5.682)	0.497 - 0.649 (4.399 - 5.744)	1.014 - 1.419 (8.975 - 12.559)	4.807 - 6.387 (42.546 - 56.530)	2

(1) Number of stages
(2) The ratio-dependent values can be retrieved in Tec Data Finder – www.neugart.com
(3) Sound pressure level from 1 m, measured on input running at n_1=3000 rpm no load; i=5
(4) Max. motor weight* in kg = 0.2 x M_b / motor length in m
* with symmetrically distributed motor weight
* with horizontal and stationary mounting
(5) These values are based on an output shaft speed of n_2=100 rpm
(6) Based on center of output shaft
(7) Other (sometimes higher) values following changes to T_{2N}, F_r, F_a, cycle, and service life of bearing. Application specific configuration with NCP – www.neugart.com

Output torques			WPLN070	WPLN090	WPLN115	WPLN142	i[1]	p[2]
Nominal output torque[3][4]	T_{2N}	Nm (lb_f.in)	45 (398)	90 (797)	160 (1416)	320 (2832)	4	1
			42 (372)	75 (664)	140 (1239)	280 (2478)	5	
			28 (248)	51 (451)	91 (805)	189 (1673)	7	
			27 (239)	50 (443)	90 (797)	180 (1593)	8	
			22 (195)	40 (354)	75 (664)	160 (1416)	10	
			77 (682)	150 (1328)	300 (2655)	640 (5664)	16	2
			77 (682)	150 (1328)	300 (2655)	800 (7081)	20	
			65 (575)	140 (1239)	260 (2301)	700 (6196)	25	
			60 (531)	112 (991)	204 (1806)	364 (3222)	28	
			77 (682)	108 (956)	200 (1770)	360 (3186)	32	
			65 (575)	140 (1239)	255 (2257)	455 (4027)	35	
			65 (575)	135 (1195)	250 (2213)	450 (3983)	40	
			65 (575)	110 (974)	200 (1770)	375 (3319)	50	
			40 (354)	80 (708)	150 (1328)	450 (3983)	64	
			27 (239)	60 (531)	125 (1106)	305 (2699)	100	
Max. output torque[4][5]	T_{2max}	Nm (lb_f.in)	72 (637)	144 (1275)	256 (2266)	512 (4532)	4	1
			67 (593)	120 (1062)	224 (1983)	448 (3965)	5	
			45 (398)	82 (726)	145 (1283)	302 (2673)	7	
			43 (381)	80 (708)	144 (1275)	288 (2549)	8	
			35 (310)	64 (566)	120 (1062)	256 (2266)	10	
			123 (1089)	240 (2124)	480 (4248)	1024 (9063)	16	2
			123 (1089)	240 (2124)	480 (4248)	1280 (11329)	20	
			104 (920)	224 (1983)	416 (3682)	1120 (9913)	25	
			96 (850)	180 (1593)	328 (2903)	580 (5133)	28	
			123 (1089)	172 (1522)	320 (2832)	576 (5098)	32	
			104 (920)	224 (1983)	410 (3629)	725 (6417)	35	
			104 (920)	216 (1912)	400 (3540)	720 (6373)	40	
			104 (920)	176 (1558)	320 (2832)	600 (5310)	50	
			64 (566)	128 (1133)	240 (2124)	720 (6373)	64	
			43 (381)	96 (850)	200 (1770)	488 (4319)	100	

(1) Ratios ($i=n_1/n_2$)
(2) Number of stages
(3) Application specific configuration with NCP – www.neugart.com
(4) Values for feather key (code "A"): for repeated load
(5) 30,000 rotations of the output shaft permitted; see page 166

Output torques			WPLN070	WPLN090	WPLN115	WPLN142	i[1]	p[2]
Emergency stop torque[3]	T_{2Stop}	Nm (lb_f.in)	100 (885)	200 (1770)	400 (3540)	800 (7081)	4	1
			100 (885)	200 (1770)	400 (3540)	800 (7081)	5	
			75 (664)	150 (1328)	300 (2655)	700 (6196)	7	
			75 (664)	150 (1328)	300 (2655)	700 (6196)	8	
			75 (664)	150 (1328)	300 (2655)	700 (6196)	10	
			150 (1328)	300 (2655)	650 (5753)	1600 (14161)	16	2
			150 (1328)	300 (2655)	650 (5753)	1600 (14161)	20	
			150 (1328)	300 (2655)	650 (5753)	1600 (14161)	25	
			120 (1062)	280 (2478)	600 (5310)	1200 (10621)	28	
			150 (1328)	300 (2655)	600 (5310)	1200 (10621)	32	
			130 (1151)	280 (2478)	650 (5753)	1500 (13276)	35	
			150 (1328)	300 (2655)	650 (5753)	1500 (13276)	40	
			150 (1328)	300 (2655)	600 (5310)	1200 (10621)	50	
			80 (708)	200 (1770)	380 (3363)	1000 (8851)	64	
			80 (708)	200 (1770)	480 (4248)	750 (6638)	100	

Input speeds			WPLN070	WPLN090	WPLN115	WPLN142	i[1]	p[2]
Average thermal input speed at T_{2N} and S1[4][5]	n_{1N}	rpm	1800[6]	1650[6]	1150[6]	950[6]	4	1
			2000[6]	1900[6]	1250[6]	1000[6]	5	
			2350[6]	2250[6]	1400[6]	1200[6]	7	
			2350[6]	2250[6]	1450[6]	1200[6]	8	
			2500[6]	2400[6]	1500[6]	1300[6]	10	
			1850[6]	1800[6]	1650[6]	1000[6]	16	2
			2000[6]	2100[6]	1950[6]	1050[6]	20	
			2150[6]	2250[6]	2150[6]	1150[6]	25	
			2200[6]	2250[6]	2150[6]	1400[6]	28	
			2300[6]	2300[6]	2200[6]	1400[6]	32	
			2350[6]	2300[6]	2200[6]	1400[6]	35	
			2400[6]	2300[6]	2250[6]	1450[6]	40	
			2500[6]	2450[6]	2400[6]	1550[6]	50	
			2600[6]	2950[6]	2850[6]	1750[6]	64	
			2700[6]	3100[6]	3050[6]	1900[6]	100	
Max. mechanical input speed[4]	n_{1Limit}	rpm	16,000	14,000	9500	8000		1
			16,000	16,000	14,000	9500		2

[1] Ratios ($i=n_1/n_2$)
[2] Number of stages
[3] Permitted 1000 times
[4] Application-specific speed configurations with NCP – www.neugart.com
[5] See page 166 for the definition
[6] Average thermal input speed at 50% T_{2N} and S1

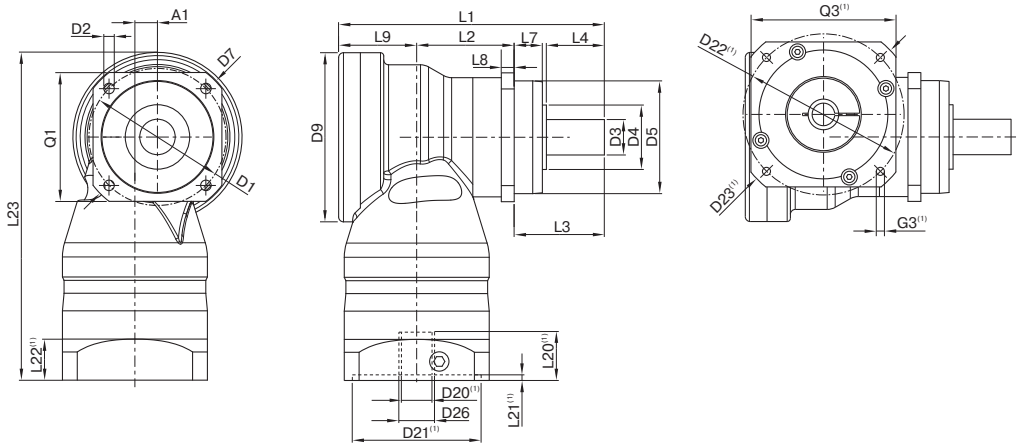

Drawing corresponds to a WPLN090 / 1-stage / smooth output shaft / 19 mm clamping system / motor adaptation – 2-part – round universal flange / B5 flange type motor

(1) The dimensions vary with the motor/gearbox flange. The input flange dimensions can be retrieved for each specific motor in Tec Data Finder at www.neugart.com

Geometry(2)			WPLN070	WPLN090	WPLN115	WPLN142	p(3)	Code
Axis offset	A1		10 (0.394)	14 (0.551)	20 (0.787)	26 (1.024)	1	
			10 (0.394)	10 (0.394)	14 (0.551)	20 (0.787)	2	
Pitch circle diameter output	D1		68 - 75 (2.677 - 2.953)	85 (3.346)	120 (4.724)	165 (6.496)		
Mounting bore output	D2	4x	5.5 (0.217)	6.5 (0.256)	9.0 (0.354)	11.0 (0.433)		
Shaft diameter output	D3	k6	16 (0.630)	22 (0.866)	32 (1.260)	40 (1.575)		
Shaft collar output	D4		30 (1.181)	40 (1.575)	45 (1.772)	70 (2.756)	1	
			35 (1.378)	40 (1.575)	45 (1.772)	70 (2.756)	2	
Centering diameter output	D5	g7	60 (2.362)	70 (2.756)	90 (3.543)	130 (5.118)		
Diagonal dimension output	D7		92 (3.622)	100 (3.937)	140 (5.512)	185 (7.283)		
Max. diameter	D9		86 (3.386)	105 (4.134)	120 (4.724)	170 (6.693)	1	
			86 (3.386)	86 (3.386)	105 (4.134)	120 (4.724)	2	
Flange cross section output	Q1	■	70 (2.756)	80 (3.150)	110 (4.331)	142 (5.591)		
Total length	L1		137.5 (5.413)	165 (6.496)	218 (8.583)	273 (10.748)	1	
			185 (7.283)	207 (8.150)	248.5 (9.783)	342.5 (13.484)	2	
Housing length	L2		46.5 (1.831)	60.5 (2.382)	73.5 (2.894)	76 (2.992)	1	
			94 (3.701)	108 (4.252)	112 (4.409)	176 (6.929)	2	
Shaft length output	L3		48 (1.890)	56 (2.205)	88 (3.465)	110 (4.331)		
Centering depth output	L7		18 (0.709)	17.5 (0.689)	28 (1.102)	28 (1.102)	1	
			19 (0.748)	17.5 (0.689)	28 (1.102)	28 (1.102)	2	
Flange thickness output	L8		7 (0.276)	8 (0.315)	10 (0.394)	12 (0.472)		
Offset length	L9		43 (1.693)	48.5 (1.909)	56.5 (2.224)	87 (3.425)	1	
			43 (1.693)	43 (1.693)	48.5 (1.909)	56.5 (2.224)	2	
Min. overall height	L23		179.0 (7.047)	203.5 (8.012)	247.5 (9.744)	318.0 (12.520)	1	
			179.0 (7.047)	182.5 (7.185)	210.0 (8.268)	258.5 (10.177)	2	
Motor shaft diameter j6/k6	D20		More information on page 163/164					
Clamping system diameter input	D26							
Output shaft with feather key (DIN 6885-1)			A 5x5x25	A 6x6x28	A 10x8x50	A 12x8x65		A
Feather key width (DIN 6885-1)	B1		5 (0.197)	6 (0.236)	10 (0.394)	12 (0.472)		
Shaft height including feather key (DIN 6885-1)	H1		18 (0.709)	24,5 (0.965)	35 (1.378)	43 (1.693)		
Shaft length from shoulder	L4		28 (1.102)	36 (1.417)	58 (2.283)	80 (3.150)		
Feather key length	L5		25 (0.984)	28 (1.102)	50 (1.969)	65 (2.559)		
Distance from shaft end	L6		2 (0.079)	4 (0.157)	4 (0.157)	8 (0.315)		
Center hole (DIN 332, type DR)	C		M5x12,5	M8x19	M12x28	M16x36		
Smooth output shaft								B
Shaft length from shoulder	L4		28 (1.102)	36 (1.417)	58 (2.283)	80 (3.150)		
Splined output shaft (DIN 5480)			W16x0,8x18x6m	W22x1,25x16x6m	W32x1,25x24x6m	W40x2,0x18x6m		C
Width of gearing	L_v		15 (0.591)	15 (0.591)	15 (0.591)	20 (0.787)		
Shaft collar output	L3		48 (1.890)	56 (2.205)	88 (3.465)	110 (4.331)		
Shaft length from shoulder	L4		26 (1.024)	26 (1.024)	26 (1.024)	40 (1.575)		
Center hole (DIN 332, type DR)	C		M5x12,5	M8x19	M12x28	M16x36		

(2) Dimensions in mm
(3) Number of stages



WPSFN

The shortest hypoid-toothed right angle gearbox with flange output shaft and hollow shaft

Our **WPSFN** is particularly easy and quick to integrate thanks to its standardized flange interface and offers high torsional rigidity. With its hypoid gearing, as well as the helical-toothed planetary stage, it achieves optimal synchronization for best surface qualities. The shortest right-angle precision gearbox, in a single-stage design with integrated hollow shaft, offers you new design solutions.

Nominal output torque	**22 - 625 Nm**
Radial force	**2150 - 12000 N**
Axial force	**4200 - 9500 N**
Torsional backlash	**3 - 5 arcmin**
Protection class	**IP65**

Frame sizes

64 **90** **110** **140**

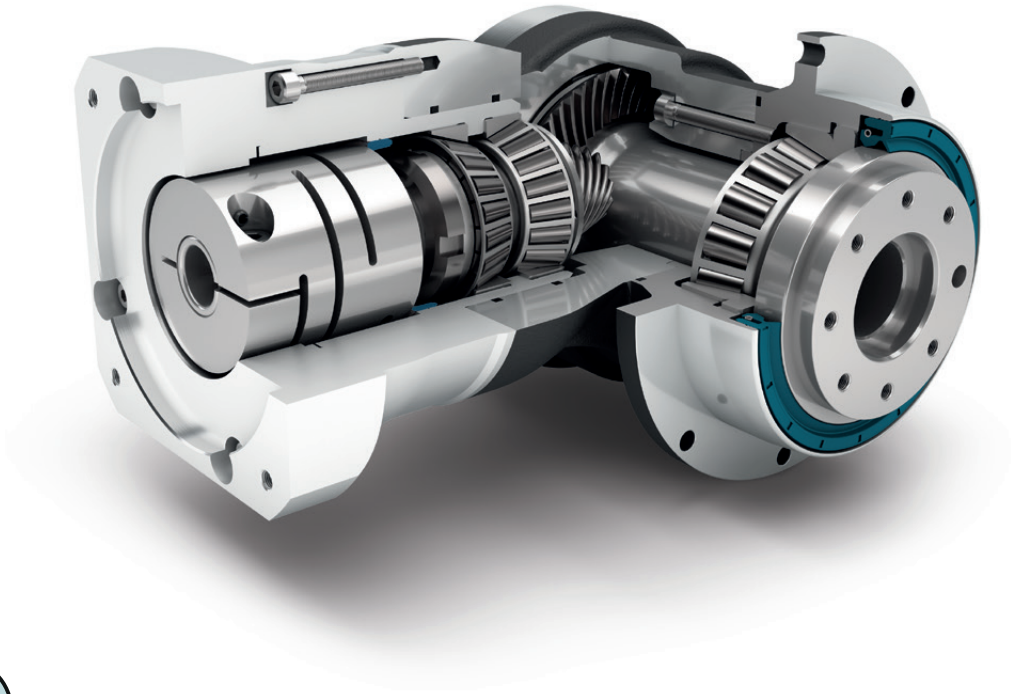

- Precision Line
- Right angle gearbox
- Hypoid gear right angle stage
- Preloaded angular contact roller bearings
- Flange output shaft (ISO 9409-1)
- Option: Reduced backlash (2-stage)
- Counterdirectional rotation
- Extra large round type output flange
- Rotary shaft seal
- Hollow shaft (1-stage)
- Option: Planetary gearbox with mounted pinion on page 132

Detailed explanations of the technical features starting on page 173.

Code	Gearbox characteristics			WPSFN064	WPSFN090	WPSFN110	WPSFN140	p(1)
	Service life (L_{10h})	t_L	h	20,000				
	Service life at T_{2N} x 0,88			30,000				
	Efficiency at full load(2)	η	%	94				1
				93				2
	Min. operating temperature	T_{min}	°C (°F)	-25 (-13)				
	Max. operating temperature	T_{max}		90 (194)				
	Protection class			IP65				
S	Standard lubrication			Oil (lifetime lubrication)				
F	Food grade lubrication			Oil (lifetime lubrication)				
	Installation position			Any				
S	Standard backlash	j_t	arcmin	< 5				
R	Reduced backlash			-				1
				< 3				2
	Torsional stiffness(2)	c_g	Nm /arcmin (lb_f.in/ arcmin)	1.9 - 2.6 (17 - 23)	4.0 - 5.5 (35 - 49)	10.1 - 13.5 (89 - 119)	26.0 - 34.5 (230 - 305)	1
				5.3 - 6.9 (47 - 61)	15.3 - 20.5 (135 - 181)	33.5 - 44.0 (296 - 389)	85.0 - 111.0 (752 - 982)	2
	Gearbox weight(2)	m_G	kg (lb_m)	3.5 - 3.6 (7.7 - 7.8)	6.6 - 7.0 (14.5 - 15.5)	11.6 - 11.7 (25.6 - 25.8)	25.4 - 26.0 (56.1 - 57.3)	1
				3.9 - 4.0 (8.7 - 8.9)	5.6 - 5.7 (12.3 - 12.6)	9.0 - 9.3 (19.8 - 20.5)	19.2 - 19.7 (42.3 - 43.4)	2
S	Standard surface			Right angle housing: Aluminum – anodized (black)				
	Running noise(3)	Q_g	dB(A)	66	67	68	70	
	Max. bending moment based on the gearbox input flange(4)	M_b	Nm (lb_f.in)	12 (106)	25.5 (226)	53 (469)	120 (1062)	1
				12 (106)	12 (106)	25.5 (226)	53 (469)	2

Output shaft loads			WPSFN064	WPSFN090	WPSFN110	WPSFN140	p(1)
Radial force for 20,000 h(5)(6)	$F_{r\ 20.000\ h}$	N (lb_f)	2400 (540)	4400 (989)	5500 (1236)	12000 (2698)	1
			2150 (483)	3950 (888)	4900 (1102)	12000 (2698)	2
Axial force for 20,000 h(5)(6)	$F_{a\ 20.000\ h}$		4200 (944)	7200 (1619)	9500 (2136)	8500 (1911)	1
			4300 (967)	8200 (1843)	9500 (2136)	8500 (1911)	2
Radial force for 30,000 h(5)(6)	$F_{r\ 30.000\ h}$		2100 (472)	3900 (877)	4800 (1079)	11000 (2473)	1
			1900 (427)	3500 (787)	4350 (978)	11000 (2473)	2
Axial force for 30,000 h(5)(6)	$F_{a\ 30.000\ h}$		3700 (832)	6300 (1416)	8400 (1888)	7500 (1686)	1
			3800 (854)	7200 (1619)	8400 (1888)	7500 (1686)	2
Maximum radial force(7)(6)	$F_{r\ Stat}$		2400 (540)	4400 (989)	5500 (1236)	12000 (2698)	1
			2150 (483)	3950 (888)	4900 (1102)	12000 (2698)	2
Maximum axial force(7)(6)	$F_{a\ Stat}$		4200 (944)	7200 (1619)	9500 (2136)	8500 (1911)	1
			4300 (967)	8200 (1843)	9500 (2136)	8500 (1911)	2
Tilting moment for 20,000 h(5)(7)	$M_{K\ 20.000\ h}$	Nm (lb_f.in)	200 (1770)	484 (4284)	689 (6098)	1989 (17604)	1
			132 (1168)	326 (2885)	475 (4204)	1030 (9116)	2
Tilting moment for 30,000 h(5)(7)	$M_{K\ 30.000\ h}$		175 (1549)	429 (3797)	601 (5319)	1823 (16135)	1
			117 (1036)	289 (2558)	422 (3735)	944 (8355)	2

Moment of inertia			WPSFN064	WPSFN090	WPSFN110	WPSFN140	p(1)
Mass moment of inertia(2)	J	$kgcm^2$ ($lb_f.in.s^2 10^{-4}$)	0.502 - 0.672 (4.443 - 5.948)	1.046 - 1.591 (9.258 - 14.082)	4.857 - 6.435 (42.988 - 56.955)	15.220 - 21.693 (134.708 - 191.999)	1
			0.497 - 0.642 (4.399 - 5.682)	0.497 - 0.659 (4.399 - 5.833)	1.015 - 1.452 (8.984 - 12.851)	4.810 - 6.449 (42.572 - 57.078)	2

(1) Number of stages
(2) The ratio-dependent values can be retrieved in Tec Data Finder – www.neugart.com
(3) Sound pressure level from 1 m, measured on input running at n_1=3000 rpm no load; i=5
(4) Max. motor weight* in kg = 0.2 x M_b / motor length in m
* with symmetrically distributed motor weight
* with horizontal and stationary mounting
(5) These values are based on an output shaft speed of n_2=100 rpm
(6) Based on the end of the output shaft
(7) Other (sometimes higher) values following changes to T_{2N}, F_r, F_a, cycle, and service life of bearing. Application specific configuration with NCP – www.neugart.com

Output torques			WPSFN064	WPSFN090	WPSFN110	WPSFN140	i(1)	p(2)
Nominal output torque(3)	T_{2N}	Nm (lb_f.in)	45 (398)	90 (797)	160 (1416)	320 (2832)	4	1
			42 (372)	75 (664)	140 (1239)	280 (2478)	5	
			28 (248)	51 (451)	91 (805)	189 (1673)	7	
			27 (239)	50 (443)	90 (797)	180 (1593)	8	
			22 (195)	40 (354)	75 (664)	160 (1416)	10	
			62 (549)	130 (1151)	310 (2744)	625 (5532)	16	2
			62 (549)	130 (1151)	300 (2655)	560 (4956)	20	
			60 (531)	120 (1062)	255 (2257)	540 (4779)	25	
			62 (549)	112 (991)	204 (1806)	364 (3222)	28	
			62 (549)	108 (956)	200 (1770)	360 (3186)	32	
			60 (531)	123 (1089)	255 (2257)	455 (4027)	35	
			60 (531)	123 (1089)	250 (2213)	450 (3983)	40	
			60 (531)	110 (974)	200 (1770)	375 (3319)	50	
			37 (327)	78 (690)	175 (1549)	355 (3142)	70	
			28 (248)	59 (522)	140 (1239)	305 (2699)	100	
Max. output torque(4)	T_{2max}	Nm (lb_f.in)	72 (637)	144 (1275)	256 (2266)	512 (4532)	4	1
			67 (593)	120 (1062)	224 (1983)	448 (3965)	5	
			45 (398)	82 (726)	145 (1283)	302 (2673)	7	
			43 (381)	80 (708)	144 (1275)	288 (2549)	8	
			35 (310)	64 (566)	120 (1062)	256 (2266)	10	
			99 (876)	210 (1859)	502 (4443)	1003 (8877)	16	2
			99 (876)	210 (1859)	480 (4248)	896 (7930)	20	
			96 (850)	197 (1744)	408 (3611)	864 (7647)	25	
			99 (876)	180 (1593)	328 (2903)	580 (5133)	28	
			99 (876)	172 (1522)	320 (2832)	576 (5098)	32	
			96 (850)	197 (1744)	410 (3629)	725 (6417)	35	
			96 (850)	197 (1744)	400 (3540)	720 (6373)	40	
			96 (850)	175 (1549)	320 (2832)	600 (5310)	50	
			59 (522)	125 (1106)	280 (2478)	568 (5027)	70	
			45 (398)	94 (832)	224 (1983)	488 (4319)	100	

(1) Ratios ($i=n_1/n_2$)
(2) Number of stages
(3) Application specific configuration with NCP – www.neugart.com
(4) 30,000 rotations of the output shaft permitted; see page 166

Output torques			WPSFN064	WPSFN090	WPSFN110	WPSFN140	i[1]	p[2]
Emergency stop torque[3]	T_{2Stop}	Nm (lb_f.in)	100 (885)	200 (1770)	400 (3540)	800 (7081)	4	1
			100 (885)	200 (1770)	400 (3540)	800 (7081)	5	
			75 (664)	150 (1328)	300 (2655)	700 (6196)	7	
			75 (664)	150 (1328)	300 (2655)	700 (6196)	8	
			75 (664)	150 (1328)	300 (2655)	700 (6196)	10	
			150 (1328)	300 (2655)	650 (5753)	1600 (14161)	16	2
			150 (1328)	300 (2655)	650 (5753)	1600 (14161)	20	
			150 (1328)	300 (2655)	650 (5753)	1650 (14604)	25	
			150 (1328)	300 (2655)	600 (5310)	1200 (10621)	28	
			150 (1328)	300 (2655)	600 (5310)	1200 (10621)	32	
			150 (1328)	300 (2655)	650 (5753)	1500 (13276)	35	
			150 (1328)	300 (2655)	650 (5753)	1500 (13276)	40	
			150 (1328)	300 (2655)	650 (5753)	1500 (13276)	50	
			80 (708)	175 (1549)	340 (3009)	1300 (11506)	70	
			90 (797)	200 (1770)	480 (4248)	600 (5310)	100	

Input speeds			WPSFN064	WPSFN090	WPSFN110	WPSFN140	i[1]	p[2]
Average thermal input speed at T_{2N} and S1[4][5]	n_{1N}	rpm	1850[6]	1650[6]	1100[6]	1000[6]	4	1
			2050[6]	1900[6]	1200[6]	1100[6]	5	
			2450[6]	2350[6]	1450[6]	1300[6]	7	
			2500[6]	2400[6]	1450[6]	1300[6]	8	
			2650[6]	2550[6]	1500[6]	1400[6]	10	
			2250[6]	2100[6]	1750[6]	1400[6]	16	2
			2400[6]	2300[6]	2000[6]	1350[6]	20	
			2500[6]	2600[6]	2300[6]	1450[6]	25	
			2550[6]	2650[6]	2400[6]	1650[6]	28	
			2550[6]	2700[6]	2450[6]	1650[6]	32	
			2750[6]	2850[6]	2450[6]	1650[6]	35	
			2800[6]	2750[6]	2500[6]	1650[6]	40	
			2750[6]	2900[6]	2650[6]	1750[6]	50	
			3000[6]	3300[6]	3000[6]	1950[6]	70	
			3050[6]	3600[6]	3300[6]	2150[6]	100	
Max. mechanical input speed[4]	n_{1Limit}	rpm	16,000	14,000	9500	8000		1
			16,000	16,000	14,000	9500		2

[1] Ratios ($i=n_1/n_2$)
[2] Number of stages
[3] Permitted 1000 times
[4] Application-specific speed configurations with NCP – www.neugart.com
[5] See page 166 for the definition
[6] Average thermal input speed at 50% T_{2N} and S1

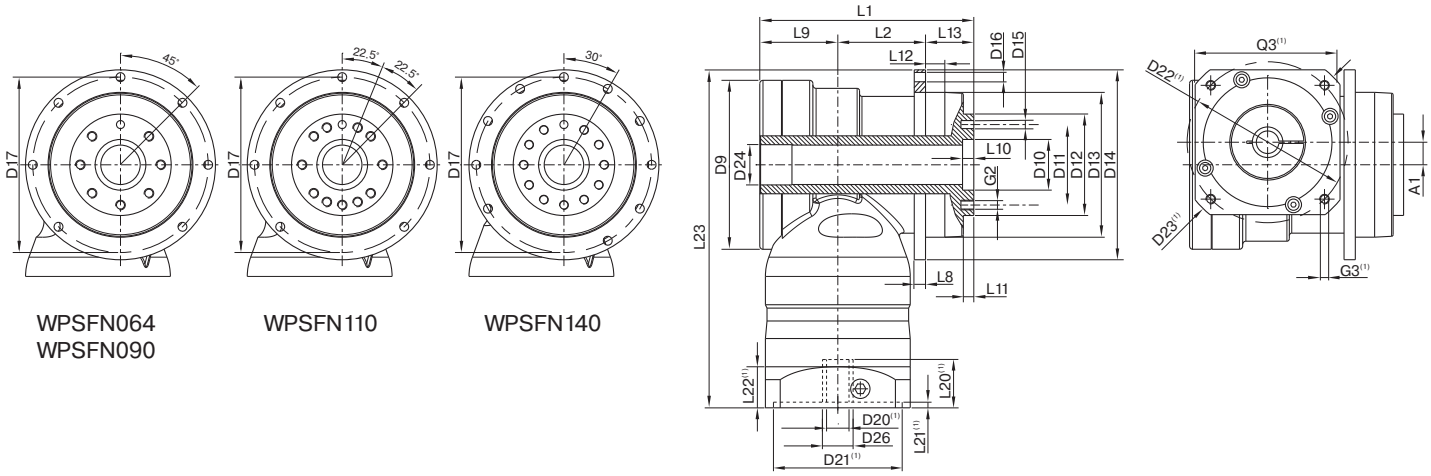

WPSFN064
WPSFN090

WPSFN110

WPSFN140

Drawing corresponds to a WPSFN090 / 1-stage / flange hollow output shaft / 19 mm clamping system / motor adaptation – 2-part – round universal flange / B5 flange type motor

(1) The dimensions vary with the motor/gearbox flange. The input flange dimensions can be retrieved for each specific motor in Tec Data Finder at www.neugart.com

Geometry(2)			WPSFN064	WPSFN090	WPSFN110	WPSFN140	p(3)	Code
Axis offset	A1		10 (0.394)	14 (0.551)	20 (0.787)	26 (1.024)	1	
			10 (0.394)	10 (0.394)	14 (0.551)	20 (0.787)	2	
Max. diameter	D9		86 (3.386)	105 (4.134)	120 (4.724)	170 (6.693)	1	
			86 (3.386)	86 (3.386)	105 (4.134)	120 (4.724)	2	
Centering diameter output shaft	D10	H7	20 (0.787)	31.5 (1.240)	40 (1.575)	50 (1.969)		
Pitch circle diameter output shaft	D11		31.5 (1.240)	50 (1.969)	63 (2.480)	80 (3.150)		
Flange output shaft diameter	D12	h7	40 (1.575)	63 (2.480)	80 (3.150)	100 (3.937)		
Centering diameter output flange	D13		64 (2.520)	90 (3.543)	110 (4.331)	140 (5.512)		
Flange diameter output	D14		86 (3.386)	118 (4.646)	145 (5.709)	179 (7.047)		
Mounting bore output	D16		4.5 7x45°	5.5 7x45°	5.5 7x45°	6.6 10x30°	1	
			4.5 8x45°	5.5 8x45°	5.5 8x45°	6.6 12x30°	2	
Pitch circle diameter output flange	D17		79 (3.110)	109 (4.291)	135 (5.315)	168 (6.614)		
Min. total length	L1		104.5 (4.114)	132 (5.197)	153.5 (6.043)	201.5 (7.933)	1	
			122.5 (4.823)	139.5 (5.492)	154 (6.063)	224 (8.819)	2	
Housing length	L2		42 (1,653)	53.5 (2.106)	68 (2.677)	76.5 (3.012)	1	
			59.5 (2.342)	66.5 (2.618)	76.5 (3.012)	129.5 (5.098)	2	
Flange thickness output	L8		4 (0.157)	7 (0.276)	8 (0.315)	10 (0.394)		
Offset length	L9		43 (1.693)	48.5 (1.909)	56.5 (2.224)	87 (3.425)	1	
			43 (1.693)	43 (1.693)	48.5 (1.909)	56.5 (2.224)	2	
Centering depth output shaft	L10		4.5 (0.177)	6.5 (0.256)	6.5 (0.256)	6.5 (0.256)		
	L11		3 (0.118)	6 (0.236)	6 (0.236)	6 (0.236)		
Centering depth output flange	L12		10 (0.394)	12 (0.472)	12 (0.472)	14 (0.551)		
Output flange length	L13		19.5 (0.760)	30.0 (1.181)	29.0 (1.142)	38.0 (1.496)		
Min. overall height	L23		179 (7.047)	210 (8.267)	260 (10.236)	323 (12.716)	1	
			179 (7.047)	195 (7.677)	223.5 (8.799)	277 (10.905)	2	
Motor shaft diameter j6/k6	D20		More information on page 163/164					
Clamping system diameter input	D26							
Flange output hollow shaft with dowel hole (ISO 9409-1)							1	H
Dowel hole x depth	D15	H7	5x5	6x6	6x6	8x8		
Hollow shaft diameter	D24		17 (0.669)	25 (0.984)	35 (1.378)	50 (1.969)		
Number x thread x depth	G2		7 x M5x7	7 x M6x10	11 x M6x12	11 x M8x15		
Flange output shaft (similar ISO 9409-1)							2	D
Number x thread x depth	G2		8 x M5x7	8 x M6x10	12 x M6x12	12 x M8x15		
Flange output shaft with dowel hole (ISO 9409-1)							2	E
Dowel hole x depth	D15	H7	5x5	6x6	6x6	8x8		
Number x thread x depth	G2		7 x M5x7	7 x M6x10	11 x M6x12	11 x M8x15		

(2) Dimensions in mm
(3) Number of stages



WGN

The hypoid-toothed right-angle gearbox with hollow shaft – low-noise and force-fit mounting

Our **WGN** is the right-angle hollow shaft gearbox that operates particularly quietly. At the same time, the hypoid gearing increases the quality of the surface of your workpiece. With a shrink disc, it can be connected directly to the application - this is uncomplicated, safe and opens up new design possibilities.

Nominal output torque	**22 - 320 Nm**
Radial force	**2700 - 10000 N**
Axial force	**4300 - 14500 N**
Torsional backlash	**5 arcmin**
Protection class	**IP65**

Frame sizes

70 **90** **115** **142**

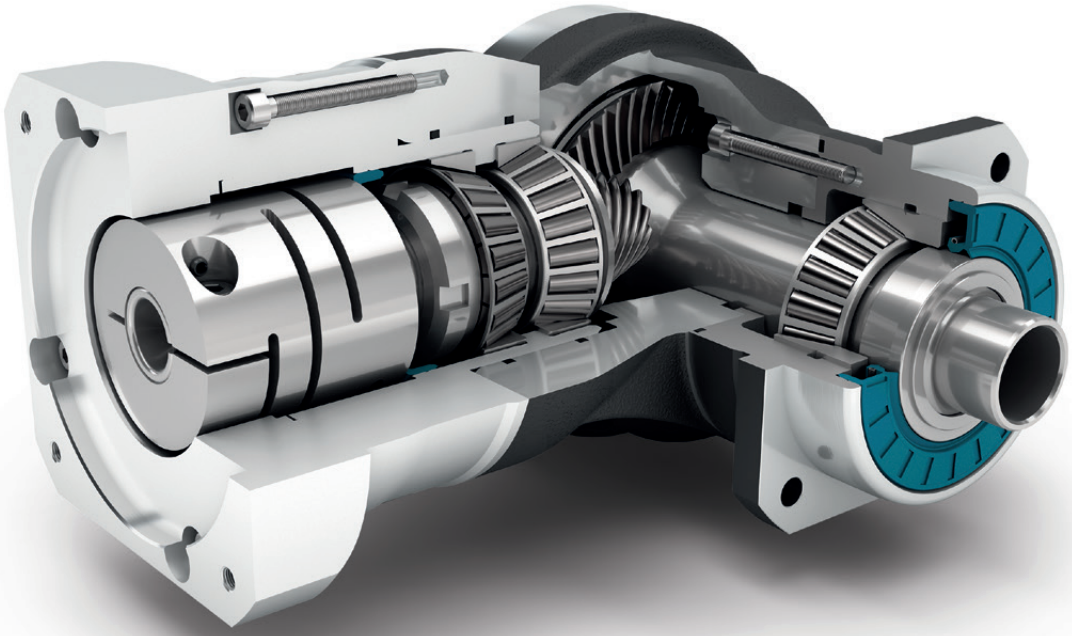

Precision Line

Right angle gearbox

Hypoid gear right angle stage

Preloaded tapered roller bearings

Extra long centering collar

Counterdirectional rotation

Square type output flange

Rotary shaft seal

Hollow shaft for clamping system with shrink disc

Detailed explanations of the technical features starting on page 173.

Code	Gearbox characteristics			WGN070	WGN090	WGN115	WGN142	p(1)
	Service life (L_{10h})	t_L	h	20,000				
	Service life at T_{2N} x 0,88			30,000				
	Efficiency at full load(2)	η	%	95				
	Min. operating temperature	T_{min}	°C (°F)	-25 (-13)				
	Max. operating temperature	T_{max}		90 (194)				
	Protection class			IP65				
S	Standard lubrication			Oil (lifetime lubrication)				
F	Food grade lubrication			Oil (lifetime lubrication)				
	Installation position			Any				
S	Standard backlash	j_t	arcmin	< 5				
R	Reduced backlash			-				
	Torsional stiffness(2)	c_g	Nm /arcmin (lb$_f$.in/ arcmin)	1.6 - 2.2 (14 - 19)	4.2 - 5.7 (37 - 50)	9.2 - 12.4 (81 - 110)	23.5 - 31.5 (208 - 279)	
	Gearbox weight(2)	m_G	kg (lb$_m$)	3.2 - 3.3 (7.1 - 7.2)	5.1 - 5.6 (11.3 - 12.3)	10.9 (24.0)	23.3 - 23.8 (51.3 - 52.5)	
S	Standard surface			Right angle housing: Aluminum – anodized (black)				
	Running noise(3)	Q_g	dB(A)	66	67	68	70	
	Max. bending moment based on the gearbox input flange(4)	M_b	Nm (lb$_f$.in)	12 (106)	25.5 (226)	53 (469)	120 (1062)	

Output shaft loads			WGN070	WGN090	WGN115	WGN142	p(1)
Radial force for 20,000 h(5)(6)	$F_{r\,20.000\,h}$	N (lb$_f$)	2700 (607)	4000 (899)	6500 (1461)	10000 (2248)	
Axial force for 20,000 h(5)(6)	$F_{a\,20.000\,h}$		4300 (967)	5900 (1326)	7000 (1574)	14500 (3260)	
Radial force for 30,000 h(5)(6)	$F_{r\,30.000\,h}$		2700 (607)	4000 (899)	6500 (1461)	10000 (2248)	
Axial force for 30,000 h(5)(6)	$F_{a\,30.000\,h}$		3700 (832)	5200 (1169)	6100 (1371)	12000 (2698)	
Maximum radial force(6)(7)	$F_{r\,Stat}$		2700 (607)	4000 (899)	6500 (1461)	10000 (2248)	
Maximum axial force(6)(7)	$F_{a\,Stat}$		4300 (967)	5900 (1326)	7000 (1574)	14500 (3260)	
Tilting moment for 20,000 h(5)(7)	$M_{K\,20.000\,h}$	Nm (lb$_f$.in)	252 (2230)	442 (3912)	970 (8585)	1505 (13320)	
Tilting moment for 30,000 h(5)(7)	$M_{K\,30.000\,h}$		252 (2230)	442 (3912)	970 (8585)	1505 (13320)	

Moment of inertia			WGN070	WGN090	WGN115	WGN142	p(1)
Mass moment of inertia(2)	J	kgcm^2 (lb$_f$.in.s^{2}10^{-4})	0.502 - 0.834 (4.443 - 7.382)	1.018 - 1.417 (9.010 - 12.542)	4.805 - 6.111 (42.528 - 54.087)	12.934 - 18.905 (114.476 - 167.323)	

(1) Number of stages
(2) The ratio-dependent values can be retrieved in Tec Data Finder – www.neugart.com
(3) Sound pressure level from 1 m, measured on input running at n_1=3000 rpm no load; i=5
(4) Max. motor weight* in kg = 0.2 x M_b / motor length in m
* with symmetrically distributed motor weight
* with horizontal and stationary mounting
(5) These values are based on an output shaft speed of n_2=100 rpm
(6) Based on center of output shaft
(7) Other (sometimes higher) values following changes to T_{2N}, F_r, F_a, cycle, and service life of bearing. Application specific configuration with NCP – www.neugart.com

Output torques			WGN070	WGN090	WGN115	WGN142	i[1]	p[2]
Nominal output torque[3]	T_{2N}	Nm (lb_f.in)	45 (398)	70 (620)	140 (1239)	320 (2832)	4	1
			42 (372)	70 (620)	140 (1239)	280 (2478)	5	
			28 (248)	51 (451)	91 (805)	189 (1673)	7	
			27 (239)	50 (443)	90 (797)	180 (1593)	8	
			22 (195)	40 (354)	75 (664)	160 (1416)	10	
Max. output torque[4]	T_{2max}	Nm (lb_f.in)	72 (637)	112 (991)	224 (1983)	512 (4532)	4	
			67 (593)	112 (991)	224 (1983)	448 (3965)	5	
			45 (398)	82 (726)	145 (1283)	302 (2673)	7	
			43 (381)	80 (708)	144 (1275)	288 (2549)	8	
			35 (310)	64 (566)	120 (1062)	256 (2266)	10	
Emergency stop torque[5]	T_{2Stop}	Nm (lb_f.in)	100 (885)	200 (1770)	400 (3540)	800 (7081)	4	
			100 (885)	200 (1770)	400 (3540)	800 (7081)	5	
			75 (664)	150 (1328)	300 (2655)	700 (6196)	7	
			75 (664)	150 (1328)	300 (2655)	700 (6196)	8	
			75 (664)	150 (1328)	300 (2655)	700 (6196)	10	

Input speeds			WGN070	WGN090	WGN115	WGN142	i[1]	p[2]
Average thermal input speed at T_{2N} and S1[4][5]	n_{1N}	rpm	1750[6]	1700[6]	1150[6]	950[6]	4	1
			1900[6]	1850[6]	1200[6]	1000[6]	5	
			2250[6]	2200[6]	1400[6]	1200[6]	7	
			2300[6]	2200[6]	1400[6]	1200[6]	8	
			2400[6]	2350[6]	1500[6]	1300[6]	10	
Max. mechanical input speed[4]	n_{1Limit}	rpm	16,000	14,000	9500	8000		

(1) Ratios ($i=n_1/n_2$)
(2) Number of stages
(3) Application specific configuration with NCP – www.neugart.com
(4) 30,000 rotations of the output shaft permitted; see page 166
(5) Permitted 1000 times
(6) Application-specific speed configurations with NCP – www.neugart.com
(7) See page 166 for the definition
(8) Average thermal input speed at 50% T_{2N} and S1

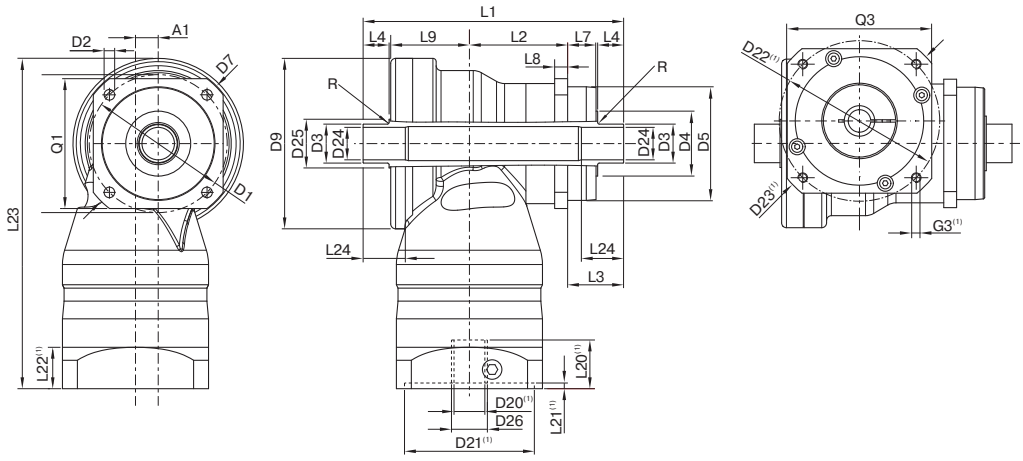

Drawing corresponds to a WGN090 / 1-stage / hollow output shaft on both sides / 19 mm clamping system / motor adaptation – 2-part – round universal flange / B5 flange type motor

(1) The dimensions vary with the motor/gearbox flange. The input flange dimensions can be retrieved for each specific motor in Tec Data Finder at www.neugart.com

Geometry(2)			**WGN070**	**WGN090**	**WGN115**	**WGN142**	**p**(3)	**Code**
Axis offset	A1		10 (0.394)	14 (0.551)	20 (0.787)	26 (1.024)	1	
Pitch circle diameter output	D1		68 - 75 (2.677 - 2.953)	85 (3.346)	120 (4.724)	165 (6.496)		
Mounting bore output	D2	4x	5.5 (0.217)	6.5 (0.256)	9.0 (0.354)	11.0 (0.433)		
Shaft diameter output	D3	h8	18 (0.709)	24 (0.945)	36 (1.417)	50 (1.969)		
Shaft collar output	D4		30 (1.181)	34 (1.339)	45 (1.772)	70 (2.756)		
Centering diameter output	D5	g7	60 (2.362)	70 (2.756)	90 (3.543)	130 (5.118)		
Diagonal dimension output	D7		92 (3.622)	100 (3.937)	140 (5.512)	185 (7.283)		
Max. diameter	D9		86 (3.386)	105 (4.134)	120 (4.724)	170 (6.693)		
Flange cross section output	Q1	■	70 (2.756)	80 (3.150)	110 (4.331)	142 (5.591)		
Housing length	L2		46.5 (1.831)	60.5 (2.382)	73.5 (2.894)	76 (2.992)		
Shaft length output	L3		33 (1.299)	34.5 (1.358)	48 (1.890)	54 (2.126)		
Centering depth output	L7		18 (0.709)	17.5 (0.689)	27 (1.063)	28 (1.102)		
Flange thickness output	L8		7 (0.276)	8 (0.315)	10 (0.394)	12 (0.472)		
Offset length	L9		43 (1.693)	48.5 (1.909)	56.5 (2.224)	87 (3.425)		
Min. overall height	L23		179 (7.047)	203.5 (8.012)	247.5 (9.744)	318 (12.520)		
Max. radius	R		1.5 (0.059)					
Motor shaft diameter j6/k6	D20		More information on page 163/164					
Clamping system diameter input	D26							
Hollow output shaft on one side								F
Hollow shaft diameter	D24	H6	15 (0.591)	20 (0.787)	30 (1.181)	40 (1.575)		
Total length	L1		122.5 (4.823)	143.5 (5.650)	178 (7.008)	217 (8.543)		
Shaft length from shoulder	L4		14 (0.551)	16 (0.630)	20 (0.787)	25 (0.984)		
Min. fit length	L24		20 (0.787)	25 (0.984)	30 (1.181)	35 (1.378)		
Hollow output shaft on both sides								G
Hollow shaft diameter	D24	H6	15 (0.591)	20 (0.787)	30 (1.181)	40 (1.575)		
Shaft collar	D25		25 (0.984)	30 (1.181)	42 (1.654)	55 (2.165)		
Total length	L1		137.5 (5.413)	160.5 (6.319)	199 (7.835)	243 (9.567)		
Shaft length from shoulder	L4		14 (0.551)	16 (0.630)	20 (0.787)	25 (0.984)		
Min. fit length	L24		20 (0.787)	25 (0.984)	30 (1.181)	35 (1.378)		

(2) Dimensions in mm
(3) Number of stages

WGN Shrink disc



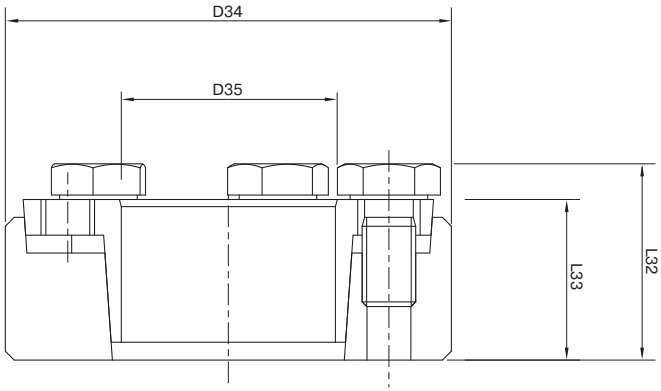

This shrink disc can be used to make a force-fit connection between your machine shaft and the right angle hollow shaft gearbox WGN.

			WGN070	WGN090	WGN115	WGN142
Art. No.			**58365**	**58366**	**58367**	**58368**
Outside diameter	D34	mm (in)	44 (1.732)	50 (1.968)	72 (2.835)	90 (3.543)
Inner diameter	D35		18 (0.709)	24 (0.945)	36 (1.417)	50 (1.968)
Overall length[1]	L32		19 (0.748)	22 (0.866)	27.3 (1.075)	31.3 (1.232)
Clamp length[1]	L33		15 (0.591)	18 (0.709)	22 (0.866)	26 (1.024)
Width across flats	SW30		10 (0.394)	10 (0.394)	13 (0.512)	13 (0.512)
Number of clamp screws	N30		4 (0.157)	5 (0.197)	5 (0.197)	8 (0.315)
Mass moment of inertia	J	$kgcm^2$ ($lb_f.in.s^2 10^{-4}$)	0.4251 (3.672)	0.7831 (6.930)	4.212 (37.276)	11.55 (102.218)

For the load shaft, we recommend a tolerance of h6 and a surface roughness of Ra < 3.2 µm. CAD data can be accessed at www.neugart.com

For correct installation of the shrink disc, please refer to the corresponding mounting instructions (www.neugart.com)

Included parts

1 x Shrink disc (incl. screws)

[1] Dimensions in unclamped state

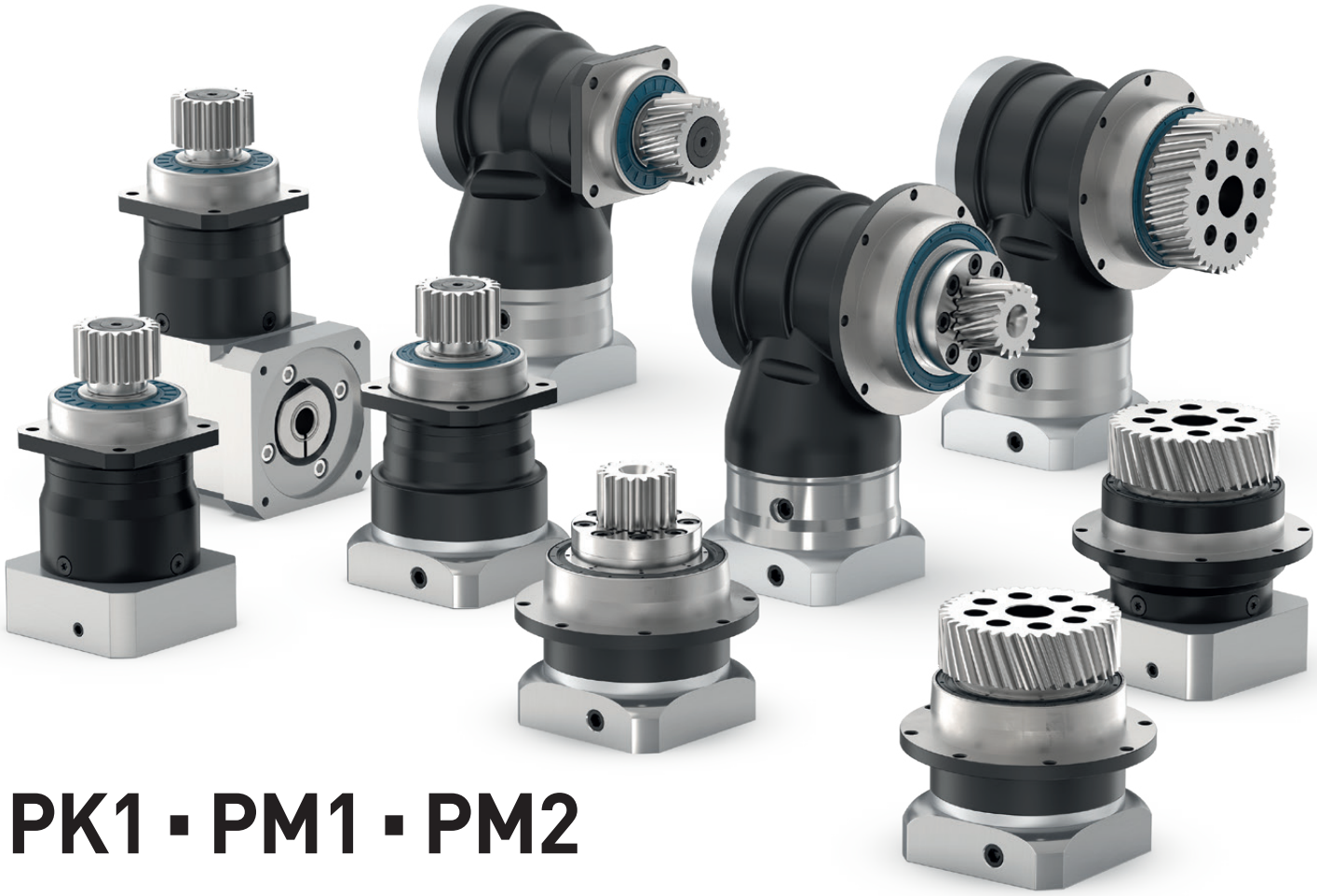

PK1 ▪ PM1 ▪ PM2

The integrated gearbox/pinion combination: Added value for your toothed rack applications.

The pinion is the essential element of the rack and pinion drive for converting the rotatory movement of the gearbox into a linear movement. The Neugart pinion is pre-mounted on the gearbox and secured with screws. This means that the compact unit consisting of the gearbox and the pinion can be quickly installed in the application, and less installation work is required.



PK 1 Pinion

Module	**2-5**
Number of teeth	**15-27**
Maximum feed force	**4-31 kN**



PM 1 Pinion

Module	**2-4**
Number of teeth	**26-45**
Maximum feed force	**2-14 kN**

Depending on the gearbox selected, the following features are available:

- Economy Line
- Precision Line
- Coaxial gearbox
- Right angle gearbox
- Pinion with straight teeth
- Pinion with helical teeth
- Preloaded tapered roller bearings
- Preloaded angular contact roller bearings
- Extra long centering collar
- Extra large round type output flange
- Square type output flange
- Rotary shaft seal
- Option: Reduced backlash

Detailed explanations of the technical features starting on page 173.

PM 2 Pinion

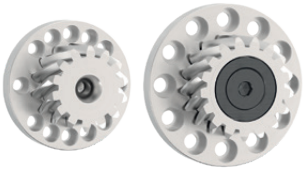

Module	**2-5**
Number of teeth	**16-22**
Maximum feed force	**7-30 kN**

Pinion with helical teeth



Helix angle β = -19,5283° (rising to the left)
Angle of pressure 20°
hardened and ground
Quality 6

Pinion type	Module	Number of teeth	Pitch circle diameter	Profile modification factor	Operating pitch circle diameter	Feed constant	Pinion weight	Max. torque	Max. feed force	Suitable for gearbox (1) (2)				
	m	z	d_0	x	d_W	$d_0 \times \pi$	m_P	T_{vmax}	F_V					
	mm		mm		mm	mm/U	kg	Nm	N					
PK1	2	15	31.831	0.55	34.03	100.00	0.16	90	5650	PSN070	PLN070	WPLN070	PLHE060	WPLHE060
PK1	2	16	33.953	0.55	36.15	106.67	0.18	103	6060					
PK1	2	18	38.197	0.45	40.00	120.00	0.23	141	7380					
PK1	2	18	38.197	0.45	40.00	120.00	0.21	141	7380	PSN090	PLN090	WPLN090	PLHE080	WPLHE080
PK1	2	20	42.441	0.45	44.24	133.33	0.27	183	8620					
PK1	2	22	46.686	0.45	48.49	146.67	0.33	218	9330					
PK1	2	23	48.808	0.45	50.61	153.33	0.32	229	9380	PSN115	PLN115	WPLN115	PLHE120	WPLHE120
PK1	2	25	53.052	0.45	54.85	166.67	0.39	250	9420					
PK1	2	27	57.296	0.35	58.70	180.00	0.46	275	9590					
PK1	3	20	63.662	0.45	66.36	200.00	0.69	534	16770					
PK1	3	20	63.662	0.45	66.36	200.00	0.77	534	16770	PSN142	PLN142	WPLN142	-	-
PK1	3	22	70.028	0.45	72.73	220.00	0.94	602	17190					
PK1	3	24	76.394	0.45	79.09	240.00	1.12	660	17270					
PK1	4	20	84.883	0.40	88.08	266.67	1.64	1295	30510	PSN190	PLN190	-	-	-

Pinion with straight teeth



Helix angle β = 0°
Angle of pressure 20°
hardened and ground
Quality 6

Pinion type	Module	Number of teeth	Pitch circle diameter	Profile modification factor	Operating pitch circle diameter	Feed constant	Pinion weight	Max. torque	Max. feed force	Suitable for gearbox (1) (2)				
	m	z	d_0	x	d_W	$d_0 \times \pi$	m_P	T_{vmax}	F_V					
	mm		mm		mm	mm/U	kg	Nm	N					
PK1	2	16	32.00	0.50	34.00	100.53	0.16	61	3810	PSN070	PLN070	WPLN070	PLHE060	WPLHE060
PK1	2	19	38.00	0.40	39.60	119.38	0.20	94	4940	PSN090	PLN090	WPLN090	PLHE080	WPLHE080
PK1	3	17	51.00	0.40	53.40	160.22	0.40	225	8820	PSN115	PLN115	WPLN115	PLHE120	WPLHE120
PK1	3	22	66.00	0.20	67.20	207.35	0.79	397	12030	PSN142	PLN142	WPLN142	-	-
PK1	4	19	76.00	0.30	78.40	238.76	1.32	712	18730					
PK1	4	22	88.00	0.20	89.60	276.46	1.71	986	22400	PSN190	PLN190	-	-	-
PK1	5	19	95.00	0.40	99.00	298.45	2.38	1481	31170					

(1) Application specific configuration with NCP.
More information about the gearboxes can be found on the product pages or at www.neugart.com

(2) The nominal output torque depends on the transmission ratio.

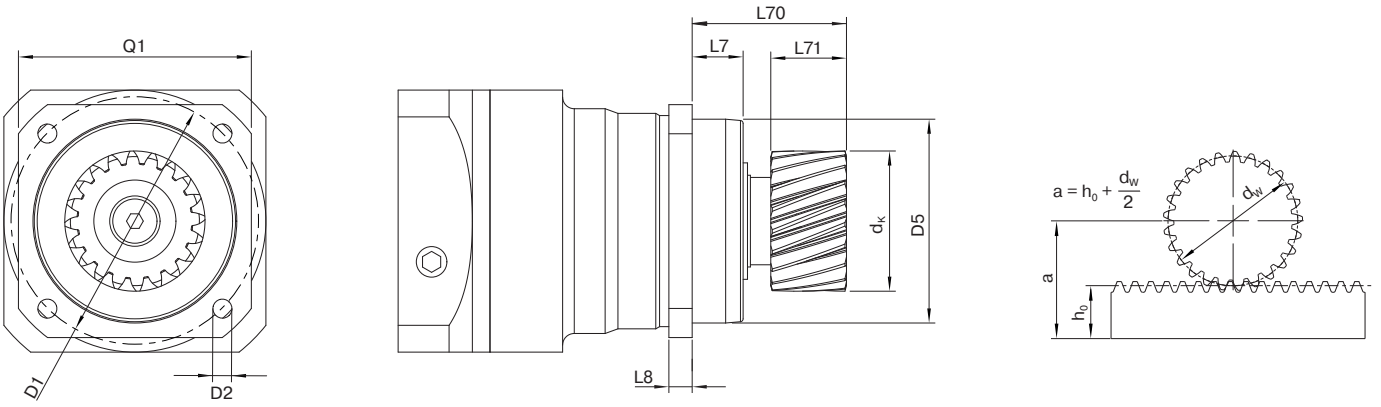

Pinion with helical teeth

Frame size	Pinion type	Module	Number of teeth	Tip diameter	Operating pitch circle diameter	Center distance[1]	Output shaft length with pinion	Pinion width	Centering depth	Flange thickness output	Pitch circle diameter	Mounting bore	Centering diameter	Flange cross section
		m	z	d_K	d_w	a	L70	L71	L7	L8	D1	D2	D5	Q1
		mm		mm	mm	mm	mm	mm	mm	mm	mm	mm	mm	mm
060 / 070	PK1	2	15	37.95	34.03	39.02	52	26	19	7	68-75	5.5	60 g7	70
	PK1	2	16	40.07	36.15	40.08	52	26	19	7	68-75	5.5	60 g7	70
	PK1	2	18	43.92	40.00	42.00	52	26	19	7	68-75	5.5	60 g7	70
080 / 090	PK1	2	18	43.92	40.00	42.00	53	26	17.5	8	85	6.5	70 g7	80
	PK1	2	20	48.16	44.24	44.12	53	26	17.5	8	85	6.5	70 g7	80
	PK1	2	22	52.40	48.49	46.24	53	26	17.5	8	85	6.5	70 g7	80
115 / 120	PK1	2	23	54.53	50.61	47.30	64	26	28	10	120	9.0	90 g7	110
	PK1	2	25	58.74	54.85	49.43	64	26	28	10	120	9.0	90 g7	110
	PK1	2	27	62.59	58.70	51.35	64	26	28	10	120	9.0	90 g7	110
	PK1	3	20	72.25	66.36	59.18	69.5	31	28	10	120	9.0	90 g7	110
142	PK1	3	20	72.25	66.36	59.18	81	31	28	12	165	11.0	130 g7	142
	PK1	3	22	76.62	72.73	62.36	81	31	28	12	165	11.0	130 g7	142
	PK1	3	24	84.99	79.09	65.55	81	31	28	12	165	11.0	130 g7	142
190	PK1	4	20	95.97	88.08	79.04	84	41	28	15	215	13.5	160 g7	190

Pinion with straight teeth

Frame size	Pinion type	Module	Number of teeth	Tip diameter	Operating pitch circle diameter	Center distance[1]	Output shaft length with pinion	Pinion width	Centering depth	Flange thickness output	Pitch circle diameter	Mounting bore	Centering diameter	Flange cross section
		m	z	d_K	d_w	a	L70	L71	L7	L8	D1	D2	D5	Q1
		mm		mm	mm	mm	mm	mm	mm	mm	mm	mm	mm	mm
060 / 070	PK1	2	16	37.92	34.00	39.00	52	26	19	7	68 -75	5.5	60 g7	70
080 / 090	PK1	2	19	43.52	39.60	41.80	53	26	17.5	8	85	6.5	70 g7	80
115 / 120	PK1	3	17	59.29	53.40	52.70	69.5	31	28	10	120	9.0	90 g7	110
142	PK1	3	22	73.09	67.20	59.60	81	31	28	12	165	11.0	130 g7	142
	PK1	4	19	86.29	78.40	74.20	84	41	28	12	165	11.0	130 g7	142
190	PK1	4	22	97.49	89.60	79.80	84	41	28	15	215	13.5	160 g7	190
	PK1	5	19	108.89	99.00	83.50	84	51	28	15	215	13.5	160 g7	190

[1] For standard toothed rack height h_0. Module 2 (h_0 = 22 mm), Module 3 (h_0 = 26 mm), Module 4 (h_0 = 35 mm), Module 5 (h_0 = 34 mm).

Pinion with helical teeth

Helix angle β = -19,5283° (rising to the left)
Angle of pressure 20°
hardened and ground
Quality 6

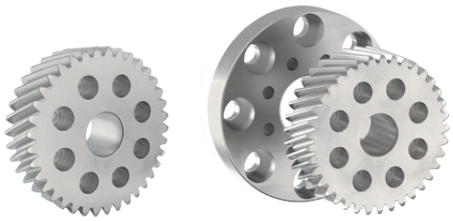

Pinion type	Module	Number of teeth	Ouptut flange (incl.)[3]	Pitch circle diameter	Profile modification factor	Operating pitch circle diameter	Feed constant	Pinion weight	Max. torque	Max. feed force	Suitable for gearbox[1][2]				
	m	z		d_0	x	d_W	$d_0 \times \pi$	m_P	T_{vmax}	F_V					
	mm			mm		mm	mm/U	kg	Nm	N					
PM1	2	26	–	55.174	0.40	56.77	173.33	0.43	81	2930	PSFN064	PLFN064	WPSFN064	PFHE064	3)
PM1	2	27	–	57.296	0.35	58.70	180.00	0.47	82	2860					
PM1	2	26	064 → 090	55.174	0.40	56.77	173.33	0.60	81	2930	PSFN090	PLFN090	WPSFN090	PFHE090	4)
PM1	2	27	064 → 090	57.296	0.35	58.70	180.00	0.64	82	2860					
PM1	2	35	064 → 090	74.272	0.35	75.67	233.33	1.00	90	2420					
PM1	2	37	–	78.517	0.35	79.92	246.67	0.89	176	4480	PSFN090	PLFN090	WPSFN090	PFHE090	3)
PM1	2	26	064 → 110	55.174	0.40	56.77	173.33	0.76	81	2930	PSFN110	PLFN110	WPSFN110	PFHE110	4)
PM1	2	27	064 → 110	57.296	0.35	58.70	180.00	0.79	82	2860					
PM1	2	35	064 → 110	74.272	0.35	75.67	233.33	1.16	90	2420					
PM1	2	40	–	84.883	0.35	86.28	266.67	0.94	312	7350	PSFN110	PLFN110	WPSFN110	PFHE110	3)
PM1	2	45	–	95.493	0.30	96.69	300.00	1.25	328	6860					
PM1	2	37	090 → 140	78.517	0.35	79.92	246.67	1.54	176	4480	PSFN140	PLFN140	WPSFN140	–	4)
PM1	3	31	090 → 140	98.676	0.35	100.78	310.00	2.40	193	3910					
PM1	3	35	–	111.409	0.35	113.51	350.00	2.18	783	14050	PSFN140	PLFN140	WPSFN140	–	3)
PM1	3	40	–	127.324	0.35	129.42	400.00	2.92	829	13020					
PM1	4	30	–	127.324	0.20	128.92	400.00	3.67	827	12990					
PM1	3	35	140 → 200	111.409	0.35	113.51	350.00	4.20	783	14050	PSFN200	PLFN200	–	–	4)
PM1	3	40	140 → 200	127.324	0.35	129.42	400.00	4.93	829	13020					
PM1	4	30	140 → 200	127.324	0.20	128.92	400.00	5.68	827	12990					

[1] Application specific configuration with NCP. More information about the gearboxes can be found on the product pages or at www.neugart.com
[2] The nominal output torque depends on the transmission ratio.

[3] Direct mounting of the pinion

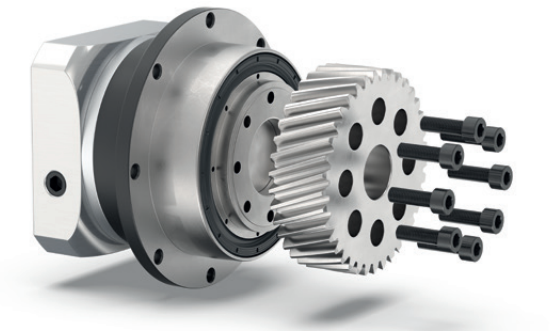

PSFN090 with PM1 pinion for gearbox frame size 090

[4] Use of an adapter flange for installing the pinion

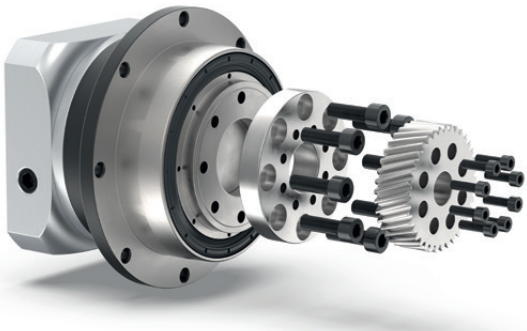

PSFN090 with adapter flange (064 → 090) and PM1 pinion for gearbox frame size 064

Frame size
064, 090 and 110

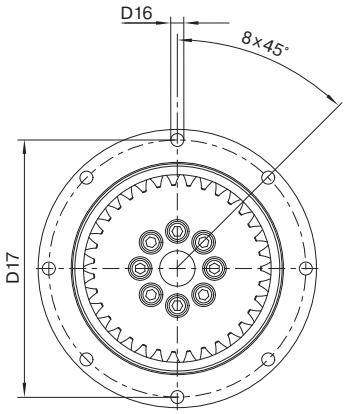

Frame size
140 and 210

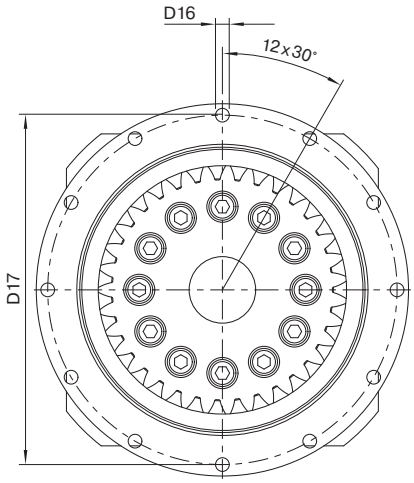

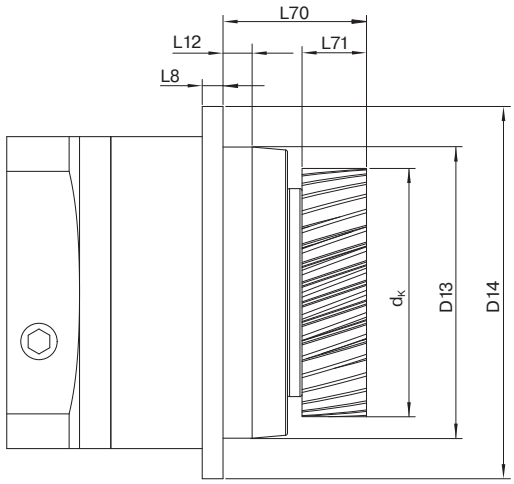

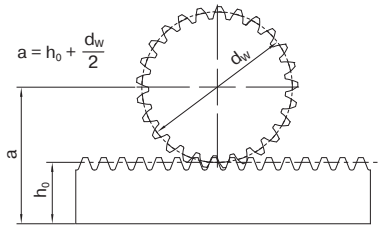

Pinion with helical teeth

Frame size	Pinion type	Module	Number of teeth	Output flange (incl.)	Tip diameter	Operating circle diameter	Center distance[1]	Output shaft length with pinion	Pinion width	Flange thickness output	Centering depth	Center diameter	Flange diameter	Mounting bore	Pitch circle diameter
		m	z		d_K	d_W	a	L70	L71	L8	L12	D13	D14	D16	D17
		mm			mm	mm	mm	mm	mm	mm	mm	mm	mm	mm	mm
064	PM1	2	26	-	60.66	56.77	50.39	45.5	26	4	10	64 h7	86	4,5 8x45°	79
	PM1	2	27	-	62.59	58.70	51.35	45.5	26	4	10	64 h7	86	4,5 8x45°	79
090	PM1	2	26	064 → 090	60.66	56.77	50.39	66	26	7	12	90 h7	118	5,5 8x45°	109
	PM1	2	27	064 → 090	62.59	58.70	51.35	66	26	7	12	90 h7	118	5,5 8x45°	109
	PM1	2	35	064 → 090	79.56	75.67	59.84	66	26	7	12	90 h7	118	5,5 8x45°	109
	PM1	2	37	-	83.81	79.92	61.96	56	26	7	12	90 h7	118	5,5 8x45°	109
110	PM1	2	26	064 → 110	60.66	56.77	50.39	65	26	8	12	110 h7	145	5,5 8x45°	135
	PM1	2	27	064 → 110	62.59	58.70	51.35	65	26	8	12	110 h7	145	5,5 8x45°	135
	PM1	2	35	064 → 110	79.56	75.67	59.84	65	26	8	12	110 h7	145	5,5 8x45°	135
	PM1	2	40	-	90.17	86.28	65.14	55	26	8	12	110 h7	145	5,5 8x45°	135
	PM1	2	45	-	100.58	96.69	70.35	55	26	8	12	110 h7	145	5,5 8x45°	135
140	PM1	2	37	090 → 140	83.81	79.92	61.96	77	26	10	14	140 h7	179	6,6 12x30°	168
	PM1	3	31	090 → 140	106.67	100.78	76.39	82	31	10	14	140 h7	179	6,6 12x30°	168
	PM1	3	35	-	119.40	113.51	82.75	69	31	10	14	140 h7	179	6,6 12x30°	168
	PM1	3	40	-	135.27	129.42	90.71	69	31	10	14	140 h7	179	6,6 12x30°	168
	PM1	4	30	-	136.77	128.92	99.46	79	41	10	14	140 h7	179	6,6 12x30°	168
200	PM1	3	35	140 → 200	119.40	113.51	82.75	100	31	12	17.5	200 h7	247	9,0 12x30°	233
	PM1	3	40	140 → 200	135.27	129.42	90.71	100	31	12	17.5	200 h7	247	9,0 12x30°	233
	PM1	4	30	140 → 200	136.77	128.92	99.46	110	41	12	17.5	200 h7	247	9,0 12x30°	233

[1] For standard toothed rack height h_0. Module 2 (h_0 = 22 mm), Module 3 (h_0 = 26 mm), Module 4 (h_0 = 35 mm).

Pinion with helical teeth



Helix angle β = -19,5283° (rising to the left)
Angle of pressure 20°
hardened and ground
Quality 6

Pinion type	Module	Number of teeth	Pitch circle diameter	Profile modification factor	Operating pitch circle diameter	Feed constant	Pinion weight	Max. torque	Max. feed force	Suitable for gearbox[1]			
	m	z	d_0	x	d_W	$d_0 \times \pi$	m_P	T_{vmax}	F_V				
	mm		mm		mm	mm/U	kg	Nm	N				
PM2	2	16	33,95	0,25	34,95	106,67	0,46	124	7300	PSFN090	PLFN090	WPSFN090	PFHE090
PM2	2	20	42,44	0,45	44,24	133,33	0,81	226	10650	PSFN110	PLFN110	WPSFN110	PFHE110
PM2	3	14	44,56	0,20	45,76	140,00	0,89	228	10230				
PM2	2	20	42,44	0,45	44,24	133,33	1,15	231	10930	PSFN140	PLFN140	WPSFN140	–
PM2	3	17	54,11	0,45	56,81	170,00	3,16	349	12930				
PM2	3	17	54,11	0,45	56,81	170,00	1,41	349	12930	PSFN200	PLFN200	–	–
PM2	4	20	84,88	0,40	88,08	266,67	4,47	1279	30140				

Pinion with straight teeth



Helix angle β = 0°
Angle of pressure 20°
hardened and ground
Quality 6

Pinion type	Module	Number of teeth	Pitch circle diameter	Profile modification factor	Operating pitch circle diameter	Feed constant	Pinion weight	Max. torque	Max. feed force	Suitable for gearbox[1]			
	m	z	d_0	x	d_W	$d_0 \times \pi$	m_P	T_{vmax}	F_V				
	mm		mm		mm	mm/U	kg	Nm	N				
PM2	2	17	34,00	0,20	34,80	106,81	0,45	98	5780	PSFN090	PLFN090	WPSFN090	PFHE090
PM2	2	22	44,00	0,40	45,60	138,23	0,82	194	8840	PSFN110	PLFN110	WPSFN110	PFHE110
PM2	3	19	57,00	0,40	59,40	179,07	1,46	275	9650	PSFN140	PLFN140	WPSFN140	–
PM2	4	22	88,00	0,20	89,60	276,46	4,54	847	19260	PSFN200	PLFN200	–	–
PM2	5	19	95,00	0,20	97,00	298,45	5,41	1304	27460				

[1] Application specific configuration with NCP.
More information about the gearboxes can be found on the product pages or at www.neugart.com

Frame size
090 and 110

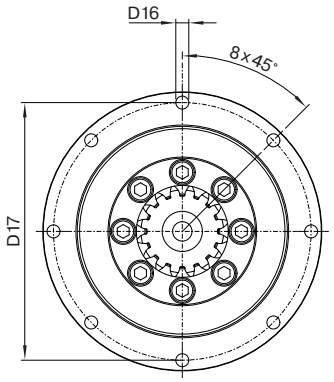

Frame size
140 and 200

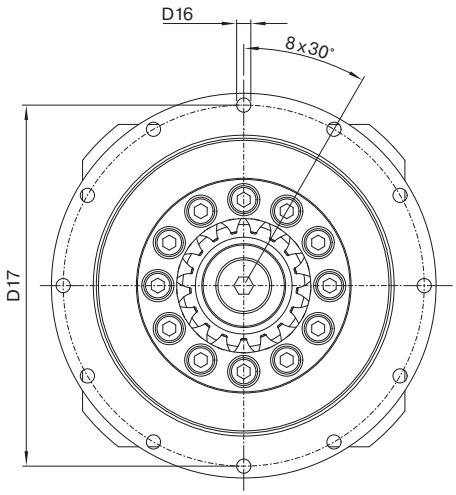

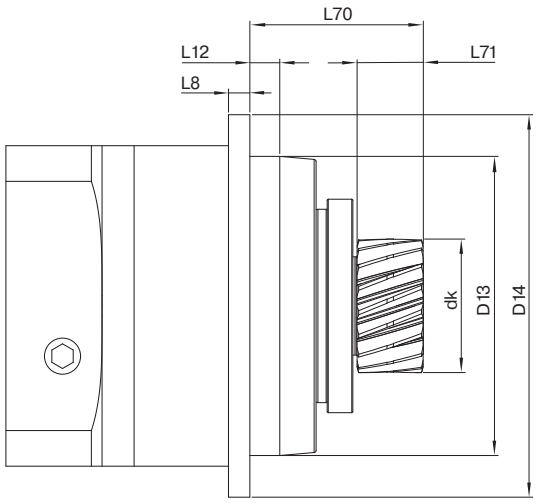

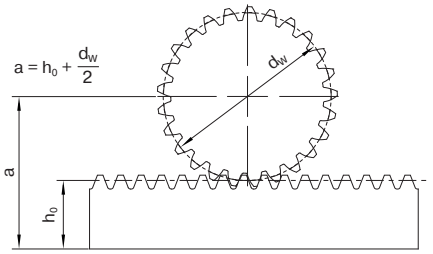

Pinion with helical teeth

Gearbox Frame size	Pinion type	Module	Number of teeth	Tip diameter	Operating pitch circle diameter	Center distance[1]	Output shaft length with pinion	Pinion width	Centering depth	Flange thickness output	Pitch circle diameter	Mounting bore	Centering diameter	Flange cross section
		m	z	dk	dw	a	L70	L71	L12	L8	D17	D16	D13	D14
		mm		mm	mm	mm	mm	mm	mm	mm	mm	mm	mm	mm
090	PM2	2	16	38,87	34,95	39,48	66,45	26	12	7	109	5,5 8x45°	90 h7	118
110	PM2	2	20	48,16	44,24	44,12	67,45	26	12	8	135	5,5 8x45°	110 h7	145
110	PM2	3	14	51,68	45,76	43,88	72,45	31	12	8	135	5,5 8x45°	110 h7	145
140	PM2	2	20	48,16	44,24	44,12	77,45	26	14	10	168	6,6 12x30°	140 h7	179
140	PM2	3	17	62,70	56,81	49,41	101,00	31	14	10	168	6,6 12x30°	140 h7	179
200	PM2	3	17	62,70	56,81	49,41	83,00	31	17,5	12	233	9,0 12x30°	200 h7	247
200	PM2	4	20	95,97	88,08	64,04	111,00	41	17,5	12	233	9,0 12x30°	200 h7	247

Pinion with straight teeth

Gearbox Frame size	Pinion type	Module	Number of teeth	Tip diameter	Operating pitch circle diameter	Center distance[1]	Output shaft length with pinion	Pinion width	Centering depth	Flange thickness output	Pitch circle diameter	Mounting bore	Centering diameter	Flange cross section
		m	z	dk	dw	a	L70	L71	L12	L8	D17	D16	D13	D14
		mm		mm	mm	mm	mm	mm	mm	mm	mm	mm	mm	mm
090	PM2	2	17	38,72	34,80	39,40	66,45	26	12	7	109	5,5 8x45°	90 h7	118
110	PM2	2	22	49,52	45,60	44,80	67,45	26	12	8	135	5,5 8x45°	110 h7	145
140	PM2	3	19	65,29	59,40	50,70	83,00	31	14	10	168	6,6 12x30°	140 h7	179
200	PM2	4	22	97,49	89,60	64,80	111,00	41	17,5	12	233	9,0 12x30°	200 h7	247
200	PM2	5	19	106,89	97,00	67,50	121,00	51	17,5	12	233	9,0 12x30°	200 h7	247

[1] For standard toothed rack height h_0. Module 2 (h_0 = 22 mm), Module 3 (h_0 = 26 mm), Module 4 (h_0 = 35 mm), Module 5 (h_0 = 34 mm).

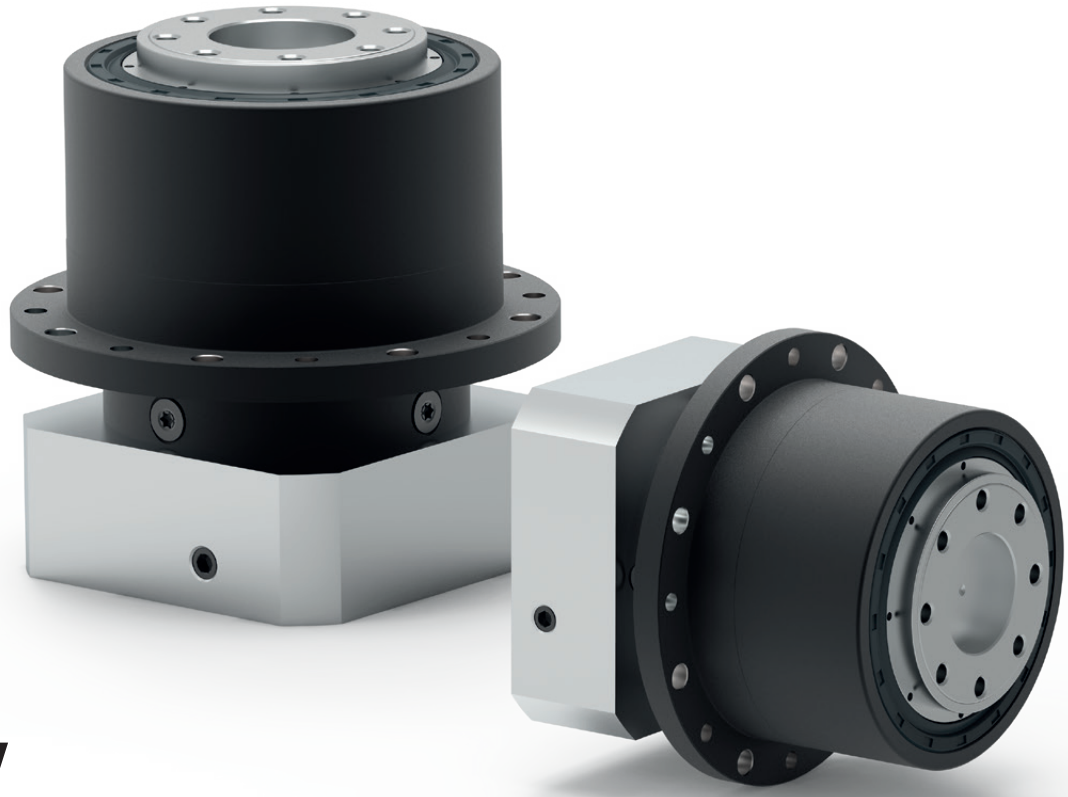

NGV

The planetary gearbox for industrial fork lift trucks. Compact and extremely resilient.

Automated guided vehicles have special requirements when it comes to drive technology. These include high radial loads, space-saving design, 24/7 use and energy efficiency. With its special output bearing concept and the option of direct mounting to the vehicle chassis, our **NGV** planetary gearbox precisely meets these requirements.

Nominal output torque **18 - 260 Nm**

Radial force **2300 - 5150 N**

Axial force **2850 - 6450 N**

Torsional backlash **9 - 12 arcmin**

Protection class **IP65**

Dynamic load capacity per gearbox

Maximum dynamic load capacity	kg (lb_m)
NGV064 incl. wheel Ø 160 mm	350 (772)
NGV090 incl. wheel Ø 200 mm	675 (1488)
NGV110 incl. wheel Ø 250 mm	1075 (2370)

Frame sizes

64 **90** **110**

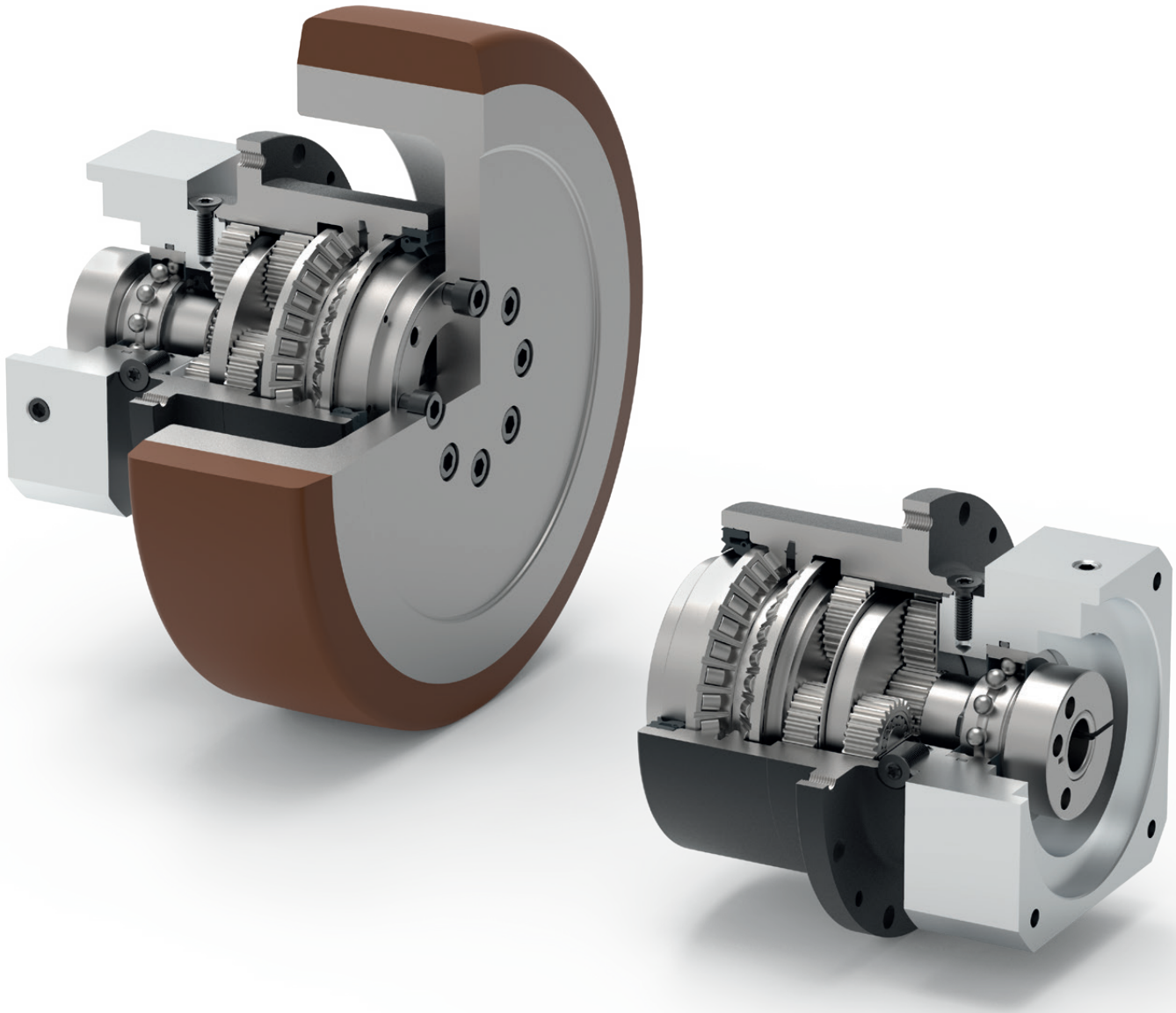

- Application-specific gearbox
- Spur gear
- Extra large round type output flange
- Preloaded angular contact roller bearings
- Rotary shaft seal
- Extra long centering collar
- Flange output shaft (ISO 9409-1)
- Planet carrier in disc design

Detailed explanations of the technical features starting on page 173.

NGV: The perfect gearbox for AGVs.

+ Direct mounting

The mounting interface allows direct mounting of the gearbox to the vehicle. No additional adapters are required.

+ Reduction of installation space

The gearbox is almost completely enclosed by the wheel. The required installation space in the vehicle is therefore reduced to a minimum.

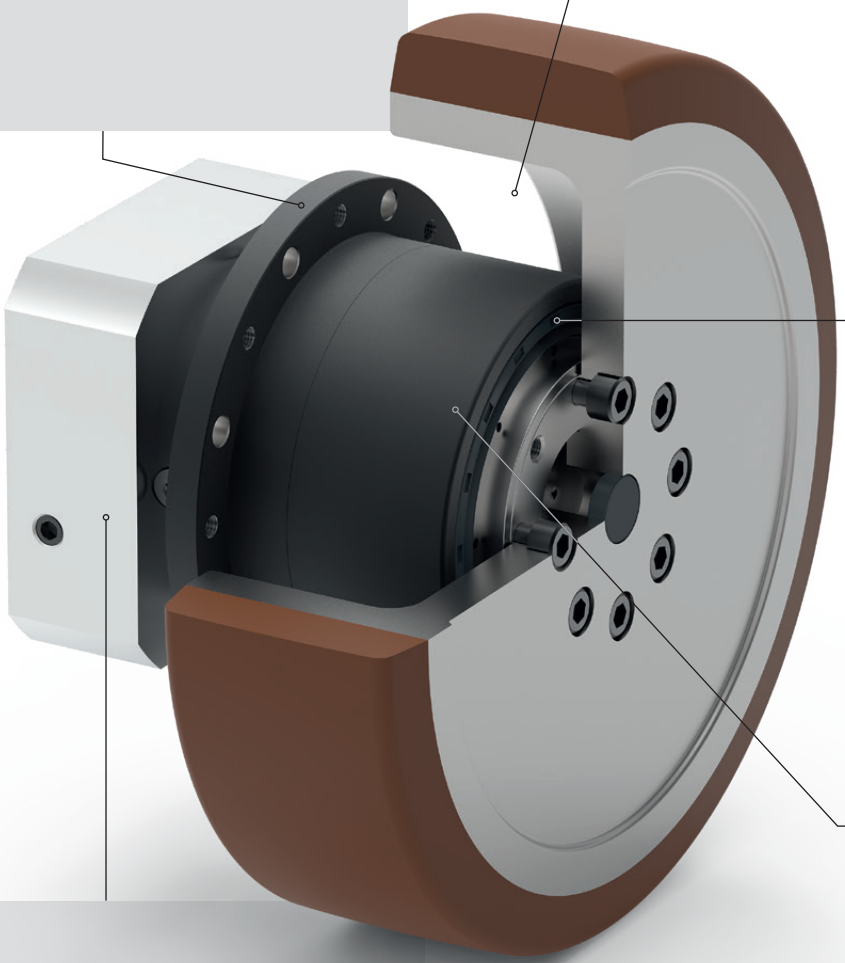

+ High load capacity

The preloaded, double-designed angular contact roller bearings permit very high radial forces.

+ Motor independent

By using different motor adapters it is possible to mount almost any motor. Direct mounting of the motor is also possible.

+ High efficiency and reliability

The proven gearbox type from the Neugart Economy series is characterized by a high efficiency. Thanks to its lifetime lubrication, it is also maintenance-free and extremely reliable, even in continuous operation.

Customer-specific AGV gearbox solutions.

Because ot the comprehensive engineering and manufacturing know-how, Neugart is your competent partner for the development and manufacture of customized gearboxes. Also for your vehicle.



Example of custom gearbox developments.

NGV gearbox incl. wheel

Characteristics (gearbox incl. wheel)			NGV064	NGV090	NGV110
Maximum dynamic load capacity[1]		kg (lb_m)	350 (772)	675 (1488)	1075 (2370)
Max. speed	v	m/s (in/s)	2 (78.7)		
Positioning precision		mm (in)	0.3 (0.012)	0.4 (0.016)	0.4 (0.016)
Total weight		kg (lb)	3.9 (8.6)	7.7 (17.0)	16.4 (36.2)

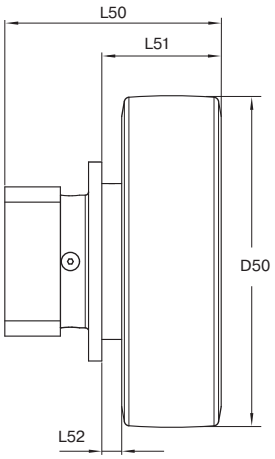

Geometry			NGV064	NGV090	NGV110
Wheel diameter	D50	mm (in)	160 (6.299)	200 (7.874)	250 (9.843)
Min. total length	L50		98.5 (3.878)	130.5 (5.138)	158.0 (6.22)
Distance between flange and outer edge	L51		58.0 (2.283)	72.0 (2.835)	94.0 (3.701)
Distance between flange and inner edge	L52		8.0 (0.315)	12.0 (0.472)	14.0 (0.551)

NGV gearbox

Code	Gearbox characteristics			NGV064	NGV090	NGV110
	Ratios	i		9; 12; 15; 16; 20; 25; 32; 40; 64		
	Service life (L_{10h})	t_L	h	30,000		
	Efficiency at full load[2]	η	%	⩾ 95		
	Min. operating temperature	T_{min}	°C (°F)	-25 (-13)		
	Max. operating temperature	T_{max}		90 (194)		
	Protection class			IP65 (at the output side)		
S	Standard lubrication			Grease (lifetime lubrication)		
F	Food grade lubrication			Grease (lifetime lubrication)		
L	Low temperature lubrication[3]			Grease (lifetime lubrication)		
	Installation position			any		
S	Standard backlash	j_t	arcmin	⩽ 12	⩽ 9	⩽ 9
	Torsional stiffness[2]	c_g	Nm / arcmin	7.3 - 11.5 (65 - 102)	19.5 - 38.5 (173 - 341)	52 - 95 (460 - 841)
	Gearbox weight[2]	m_G	kg (lb_m)	1.6 - 1.7 (3.6 - 3.7)	4.0 (8.8)	8.5 - 8.7 (18.8 - 19.2)
S	Standard surface			Housing: Steel – heat-treated and post-oxidized (black)		
	Running noise[4]	Q_g	dB(A)	60	62	65
	Max. bending moment based on the gearbox input flange[5]	M_b	Nm (lb_f.in)	12 (106)	16 (142)	40 (354)

(1) Max. load capacity of NGV gearbox with NGV wheel and dynamic load with nominal torque (T_{2N}). Application-specific design with NCP required. With F_a=0

(2) The ratio-dependent values can be retrieved in Tec Data Finder – www.neugart.com

(3) T_{min} = -40°C. Optimal operating temperature max. 50°C

(4) Sound pressure level from 1 m, measured on input running at n_1=3000 rpm no load; i=25

(5) Max. motor weight* in kg = 0.2 x M_b / motor length in m
* with symmetrically distributed motor weight
* with horizontal and stationary mounting

NGV gearbox

Output torques			NGV064	NGV090	NGV110	i[1]
Nominal output torque[2]	T_{2N}	Nm (lbf.in)	44 (389)	130 (1151)	210 (1859)	9
			44 (389)	120 (1062)	260 (2301)	12
			44 (389)	110 (974)	230 (2036)	15
			44 (389)	120 (1062)	260 (2301)	16
			44 (389)	120 (1062)	260 (2301)	20
			40 (354)	110 (974)	230 (2036)	25
			44 (389)	120 (1062)	260 (2301)	32
			40 (354)	110 (974)	230 (2036)	40
			18 (159)	50 (443)	120 (1062)	64
Max. output torque[2]	T_{2max}	Nm (lbf.in)	70 (620)	208 (1841)	384 (3399)	9
			70 (620)	192 (1699)	416 (3682)	12
			70 (620)	176 (1558)	368 (3257)	15
			70 (620)	192 (1699)	416 (3682)	16
			70 (620)	192 (1699)	416 (3682)	20
			64 (566)	176 (1558)	368 (3257)	25
			70 (620)	192 (1699)	416 (3682)	32
			64 (566)	176 (1558)	368 (3257)	40
			29 (257)	80 (708)	192 (1699)	64

Output torques			NGV064	NGV090	NGV110
Emergency stop torque[3][4]	T_{2Stop}	Nm (lbf.in)	80 - 88 (708 - 779)	190 - 260 (1682 - 2301)	380 - 500 (3363 - 4425)

Input speeds			NGV064	NGV090	NGV110
Average thermal input speed at T_{2N} and S1[2]	n_{1N}	rpm	4500	4000	3300 - 3500
Max. mechanical input speed[2]	n_{1Limit}		7500	7000	6500

Output shaft loads			NGV064	NGV090	NGV110
Radial force for 20,000 h[5][6]	$F_{r\ 20.000\ h}$	N (lbf)	2300 (517)	4100 (922)	5150 (1158)
Axial force for 20,000 h[5][6]	$F_{a\ 20.000\ h}$		2850 (641)	5450 (1225)	6450 (1450)
Radial force for 30,000 h[5][6]	$F_{r\ 30.000\ h}$		2000 (450)	3650 (821)	4550 (1023)
Axial force for 30,000 h[5][6]	$F_{a\ 30.000\ h}$		2500 (562)	4800 (1079)	5600 (1259)
Maximum radial force[6][7]	$F_{r\ Stat}$		2700 (607)	4950 (1113)	7200 (1618)
Maximum axial force[6][7]	$F_{a\ Stat}$		2850 (641)	5450 (1225)	6450 (1450)
Tilting moment for 20,000 h[5][7]	$M_{K\ 20.000\ h}$	Nm (lbf.in)	110 (25)	278 (62)	407 (91)
Tilting moment for 30,000 h[5][7]	$M_{K\ 30.000\ h}$		96 (22)	248 (56)	360 (81)

Moment of inertia			NGV064	NGV090	NGV110
Mass moment of inertia[3]	J	kgcm² ($lb_f.in.s^2 10^{-4}$)	0.066 - 0.132 (0.939 - 1.877)	0.367 - 0.667 (5.220 - 9.487)	1.416 - 2.432 (20.140 - 34.591)

(1) Ratios ($i=n_1/n_2$)
(2) Ratio-dependent. Application-specific speed configurations with NCP – www.neugart.com
(3) The ratio-dependent values can be retrieved in Tec Data Finder – www.neugart.com
(4) Permitted 1000 times
(5) These values are based on an output shaft speed of n_2=100 rpm
(6) Based on the end of the output shaft
(7) Other (sometimes higher) values following changes to T_{2N}, F_r, F_a, cycle, and service life of bearing. Application specific configuration with NCP – www.neugart.com

NGV gearbox

NGV064
NGV090 NGV110

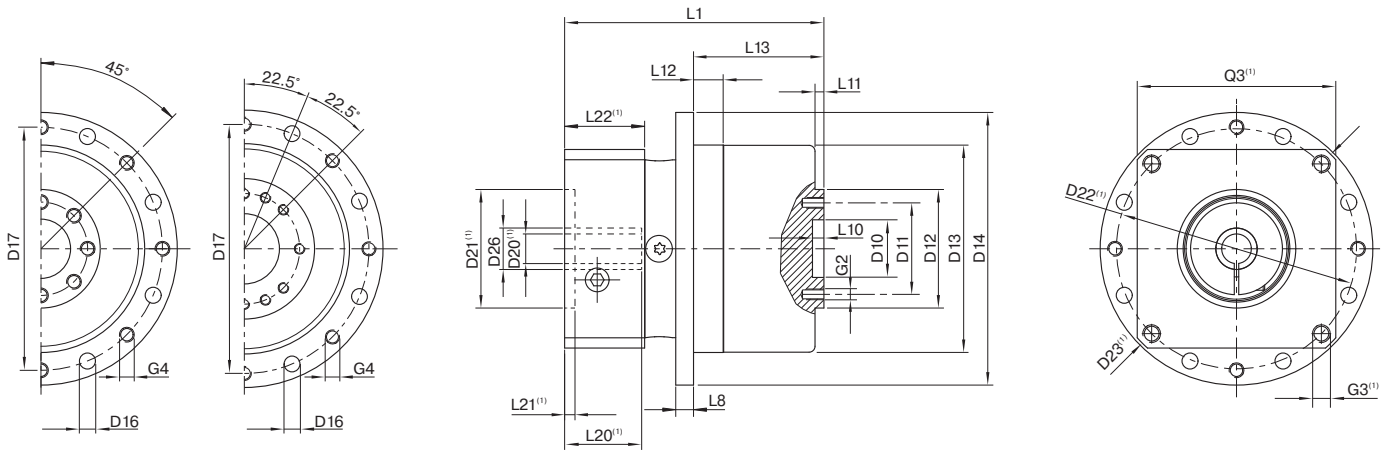

Drawing corresponds to a NGV090 / 2-stage / flange output shaft / 19 mm clamping system / motor adaptation – one part / B5 flange type motor

(1) The dimensions vary with the motor/gearbox flange. The input flange dimensions can be retrieved for each specific motor in Tec Data Finder at www.neugart.com

Geometry(2)			**NGV064**	**NGV090**	**NGV110**
Centering diameter output shaft	D10	H7	20 (0.787)	31.5 (1.240)	40 (1.575)
Pitch circle diameter output shaft	D11		31.5 (1.240)	50 (1.969)	63 (2.480)
Flange output shaft diameter	D12	h7	40 (1.575)	63 (2.480)	80 (3.150)
Centering diameter output flange	D13	h9	70 (2.756)	94 (3.701)	120 (4.724)
Flange diameter output	D14	h9	92 (3.622)	120 (4.724)	158 (6.220)
Mounting bore output	D16		Ø 5.4 8x45° (Ø 0.21 8x45°)	Ø 6.6 8x45° (Ø 0.26 8x45°)	Ø 9 8x45° (Ø 0.35 8x45°)
Pitch circle diameter output flange	D17		82 (3.328)	108 (4.252)	142 (5.591)
Min. total length	L1		84.5 (3.327)	118 (4.646)	144 (5.669)
Flange thickness output	L8		6 (0.236)	8 (0.315)	10 (0.394)
Centering depth output shaft	L10		4 (0.157)	6 (0.236)	6 (0.236)
	L11		3 (0.118)	6 (0.236)	6,5 (0.256)
Centering depth output flange	L12		10 (0.394)	15 (0.591)	21 (0.827)
Output flange length	L13		44 (1.732)	59.5 (2.343)	80 (3.150)
Clamping system diameter input	D26		11 (0.433)	19 (0.748)	24 (0.945)
			14 (0.551)	24 (0.945)	35 (1.378)
			19 (0.748)	-	-
Motor shaft diameter j6/k6	D20		5 - 19 (0.197 - 0.748)	8 - 24 (0.315 - 0.945)	11 - 35 (0.433 - 1.378)
Permissible motor shaft length	L20		More information on page 163/164		
Centering diameter input	D21				
Flange output shaft (similar ISO 9409-1)					
Number x thread x depth	G2		8 x M5x7 (8 x M5x0.27)	8 x M6x10 (8 x M6x0.39)	12 x M6x12 (8 x M6x0.47)
Number x thread	G4		8 x M5	8 x M6	8 x M8

(2) Dimensions in mm

NGV wheel

NGV wheel 160
NGV wheel 200

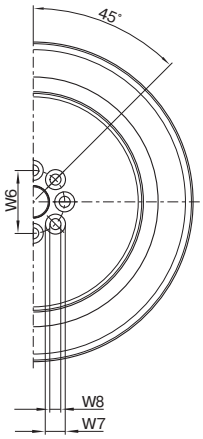

NGV wheel 250

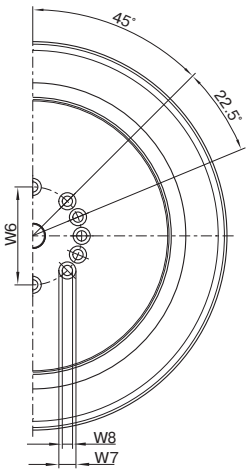

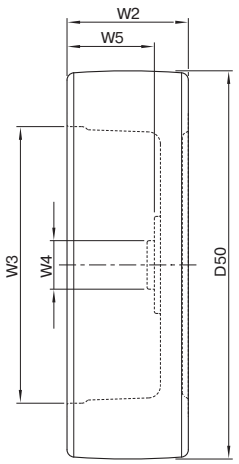

Geometry NGV wheel[1]			**NGV wheel 160**	**NGV wheel 200**	**NGV wheel 250**
Outer diameter of wheel	D50		160 ± 1,2 (6.299 ± 0.047)	200 ± 1,2 (7.874 ± 0.047)	250 ± 1,2 (9.843 ± 0.047)
Width of wheel	W2		50 ± 0,5 (1.969 ± 0.020)	60 ± 0,5 (2.362 ± 0.020)	80 ± 0,5 (3.150 ± 0.020)
Inner diameter of rim	W3		114 (4.488)	155 (6.102)	183 (7.205)
Centering outside diameter	W4	h7	20 (0.787)	31.5 (1.240)	40 (1.575)
Rim depth	W5		36 ± 0,2 (1.417 ± 0.008)	47.5 ± 0,2 (1.870 ± 0.008)	66 ± 0,2 (2.598 ± 0.008)
Screw connection pitch circle diameter	W6		31.5 (1.240)	50 (1.969)	63 (2.480)
Screw connection head diameter	W7	H13	8 x Ø 10 (8 x Ø 0.394)	8 x Ø 11 (8 x Ø 0.433)	12 x Ø 11 (12 x Ø 0.472)
Screw connection diameter	W8	H13	8 x Ø 5.5 (8 x Ø 0.217)	8 x Ø 6.6 (8 x Ø 0.260)	12 x Ø 6.6 (12 x Ø 0.260)

Scope of delivery: NGV wheel incl. screws and closure cap

Characteristics NGV wheel			**NGV wheel 160**	**NGV wheel 200**	**NGV wheel 250**
Specifications of wheel manufacturer Blickle					
Weight		kg (lb_m)	ca. 2.3 (5.1)	ca. 3.7 (8.2)	ca. 7.6 (16.8)
Mass inertia	J_R	kgcm² ($lb_f.in.s^2 10^{-4}$)	74 (16.636)	203 (45.636)	644 (144.777)
Roll resistance[2]		N (lb_f)	65 (14.6)	95 (21.4)	165 (37.1)
Static friction coefficient[3]	μ		> 0.25		
Floor protection (corresponds to surface pressure of wheel)		N/mm² (lb_f/in^2)	8,0 (113.786)		
Temperature range			-30°C (-22°F) to +70°C (+158°F), up to +90°C (+194°F) for short periods. The load-bearing capacity is reduced at ambient temperatures higher than +40°C (+104°F).		
Tread			Blickle Besthane®		
Tread color			Brown		
Tread hardness			92° Shore A		
Wheel unit			Gray cast iron		
Wheel unit color			Silver		
Corrosion protection			Wheel unit, painted		
Tread characteristics (according to tread manufacturer)			Low-noise operation, extremely low rolling resistance, high dynamic loading capability, floor protecting, extremely abrasion resistant, high degree of cutting and tear resistance, traceless, contact coloration-free.		

(1) Dimensions in mm
(2) Empirical values. At 4 km/h and with maximum load.
(3) On grinded, dry steel rail as well as on smoth, dry concrete.

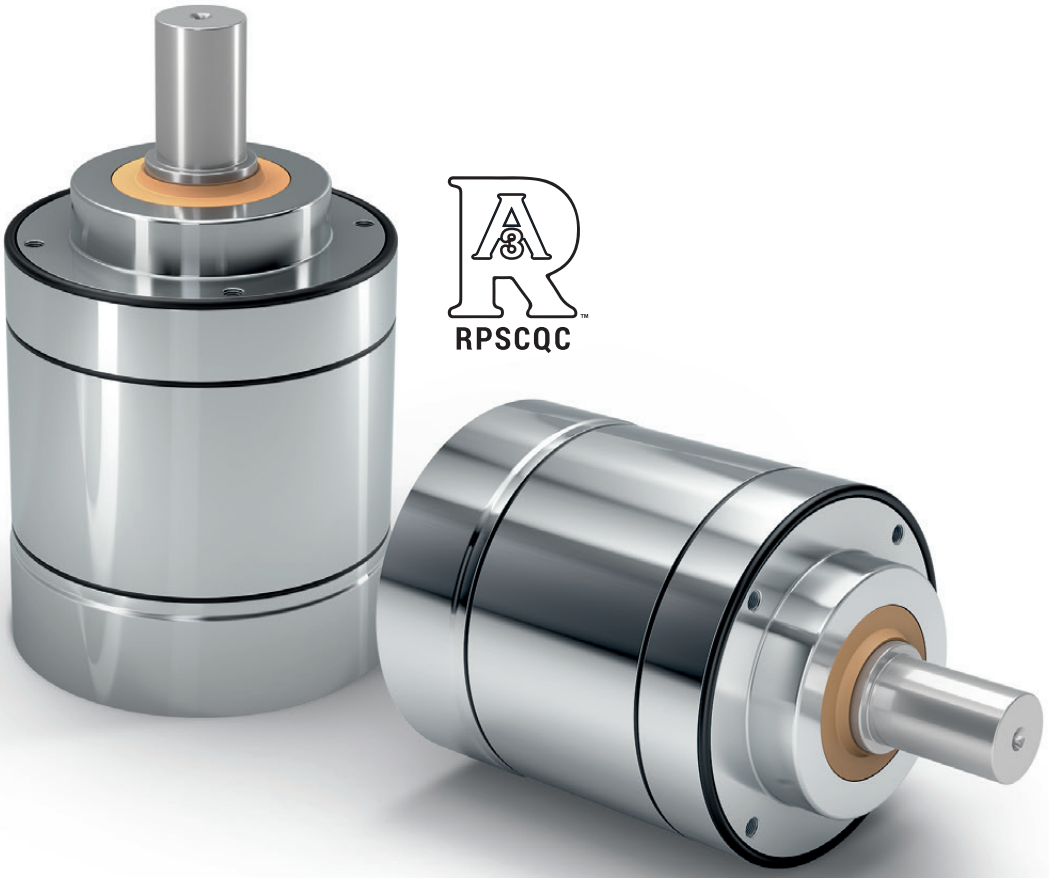

HLAE

The unique planetary gearbox with certified hygienic design – ideal for reliable cleaning processes

Our **HLAE** is unique: It is the world's first planetary gearbox in a certified hygienic design – flexible without a radial bolt, powerful and yet easy and quick to clean. It was developed specifically for applications in sensitive areas such as pharmaceuticals, cosmetics and food.

Nominal output torque	**15 - 171 Nm**
Radial force	**450 - 1450 N**
Axial force	**550 - 2500 N**
Torsional backlash	**7 - 12 arcmin**
Protection class	**IP69K**

Frame sizes

70 **90** **110**

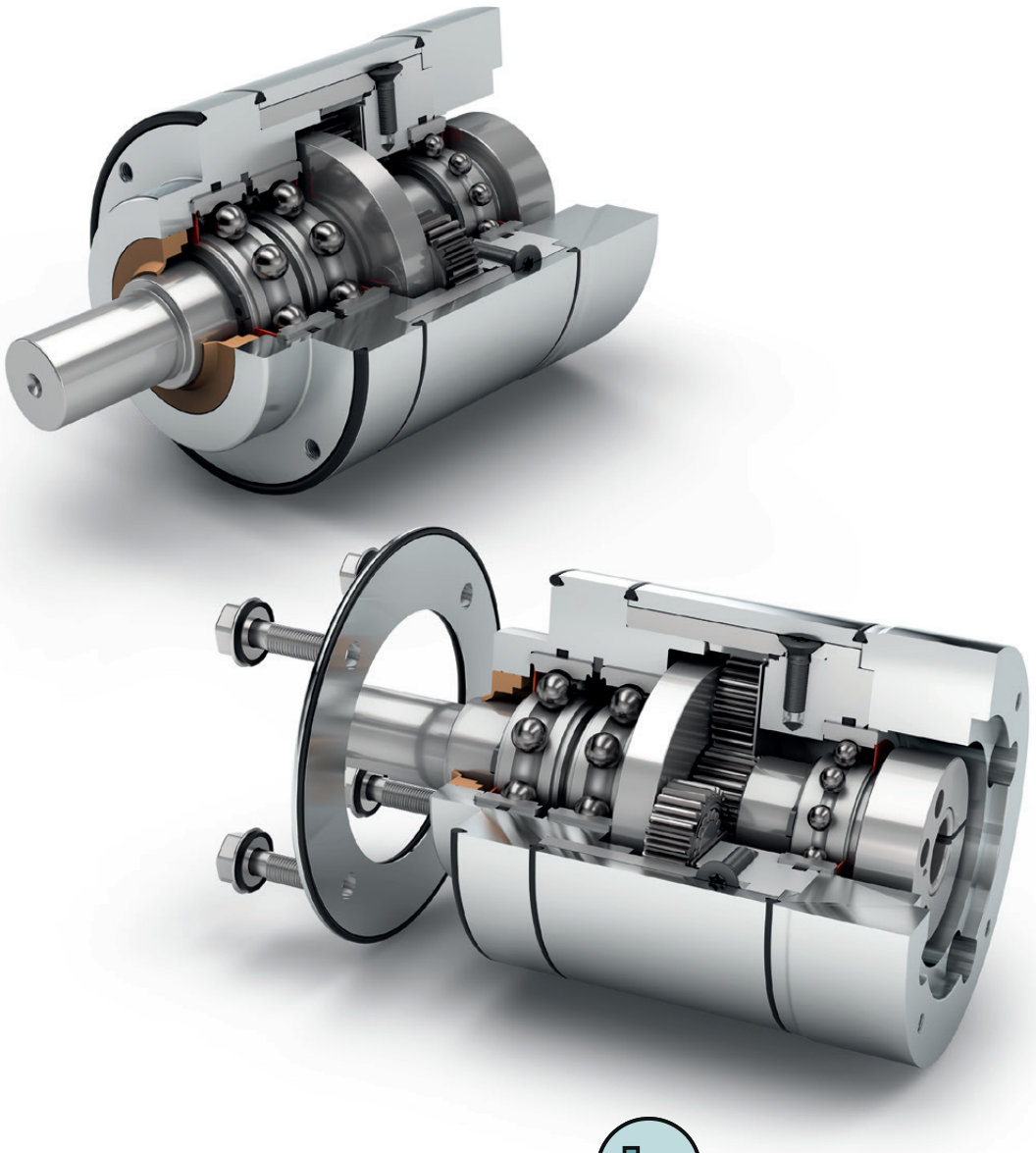

- Application-specific gearbox
- Equidirectional rotation
- Round type output flange
- Rotary shaft seal
- Planet carrier in disc design
- Coaxial gearbox
- Spur gear
- Low-friction deep groove ball bearings
- Extra long centering collar
- Option: FFKM seal

Detailed explanations of the technical features starting on page 173.

Code	Gearbox characteristics			HLAE070	HLAE090	HLAE110	p[1]
	Service life (L_{10h})	t_L	h	30,000			
	Efficiency at full load[2]	η	%	98			1
				97			2
	Min. operating temperature	T_{min}	°C (°F)	-25 (-13)			
	Max. operating temperature	T_{max}		90 (194)			
	Protection class			IP69K			
F	Food grade lubrication			Grease (lifetime lubrication)			
	Installation position			Any			
S	Standard backlash	j_t	arcmin	< 10	< 7	< 7	1
				< 12	< 9	< 9	2
	Torsional stiffness[2]	c_g	Nm /arcmin (lb_f.in/ arcmin)	2.3 - 3.1 (20 - 27)	6.6 - 8.7 (58 - 77)	14.7 - 19.5 (130 - 173)	1
				2.2 - 3.2 (19 - 28)	6.6 - 9.0 (58 - 80)	13.5 - 20.5 (119 - 181)	2
	Gearbox weight[2]	m_G	kg (lb_m)	2.1 (4.6)	3.8 (8.4)	7.3 - 7.4 (16.1 - 16.4)	1
				2.4 - 2.5 (5.2 - 5.6)	4.3 - 4.5 (9.5 - 9.9)	8.7 - 9.0 (19.1 - 19.9)	2
S	Standard surface			Housing: Stainless steel 1.4404 – electropolished (R_a < 0.8 µm)			
	Running noise[3]	Q_g	dB(A)	58	60	65	
	Max. bending moment based on the gearbox input flange[4]	M_b	Nm (lb_f.in)	8 (71)	16 (142)	40 (354)	

Output shaft loads			HLAE070	HLAE090	HLAE110	p[1]
Radial force for 20,000 h[5][6]	$F_{r\,20.000\,h}$	N (lb_f)	450 (101)	900 (202)	1450 (326)	
Axial force for 20,000 h[5][6]	$F_{a\,20.000\,h}$		550 (124)	1500 (337)	2500 (562)	
Radial force for 30,000 h[5][6]	$F_{r\,30.000\,h}$		400 (90)	600 (135)	1250 (281)	
Axial force for 30,000 h[5][6]	$F_{a\,30.000\,h}$		500 (112)	1000 (225)	2000 (450)	
Maximum radial force[6][7]	$F_{r\,Stat}$		1000 (225)	1250 (281)	5000 (1124)	
Maximum axial force[6][7]	$F_{a\,Stat}$		1200 (270)	1600 (360)	3800 (854)	
Tilting moment for 20,000 h[5][7]	$M_{K\,20.000\,h}$	Nm (lb_f.in)	22 (195)	49 (434)	109 (965)	
Tilting moment for 30,000 h[5][7]	$M_{K\,30.000\,h}$		19 (168)	33 (292)	94 (832)	

Moment of inertia			HLAE070	HLAE090	HLAE110	p[1]
Mass moment of inertia[2]	J	$kgcm^2$ ($lb_f.in.s^2 10^{-4}$)	0.065 - 0.135 (0.575 - 1.195)	0.753 - 0.866 (6.665 - 7.665)	1.579 - 2.630 (13.975 - 23.277)	1
			0.064 - 0.131 (0.566 - 1.159)	0.740 - 0.983 (6.550 - 8.700)	1.569 - 2.620 (13.887 - 23.189)	2

[1] Number of stages

[2] The ratio-dependent values can be retrieved in Tec Data Finder – www.neugart.com

[3] Sound pressure level from 1 m, measured on input running at n_1=3000 rpm no load; i=5

[4] Max. motor weight* in kg = 0.2 x M_b / motor length in m
* with symmetrically distributed motor weight
* with horizontal and stationary mounting

[5] These values are based on an output shaft speed of n_2=100 rpm

[6] Based on center of output shaft

[7] Other (sometimes higher) values following changes to T_{2N}, F_r, F_a, cycle, and service life of bearing. Application specific configuration with NCP – www.neugart.com

Output torques			HLAE070	HLAE090	HLAE110	i(1)	p(2)
Nominal output torque(3)(4)	T_{2N}	Nm (lb_f.in)	28 (248)	85 (752)	115 (1018)	3	1
			33 (292)	87 (770)	155 (1372)	4	
			30 (266)	82 (726)	171 (1513)	5	
			25 (221)	65 (575)	135 (1195)	7	
			18 (159)	50 (443)	120 (1062)	8	
			15 (133)	38 (336)	95 (841)	10	
			33 (292)	87 (770)	157 (1390)	9	2
			33 (292)	80 (708)	171 (1513)	12	
			33 (292)	82 (726)	171 (1513)	15	
			33 (292)	87 (770)	171 (1513)	16	
			33 (292)	87 (770)	171 (1513)	20	
			30 (266)	82 (726)	171 (1513)	25	
			33 (292)	87 (770)	171 (1513)	32	
			30 (266)	82 (726)	171 (1513)	40	
			18 (159)	50 (443)	120 (1062)	64	
			15 (133)	38 (336)	95 (841)	100	
Max. output torque(4)(5)	T_{2max}	Nm (lb_f.in)	45 (398)	136 (1204)	184 (1629)	3	1
			53 (469)	140 (1239)	248 (2195)	4	
			48 (425)	131 (1159)	274 (2425)	5	
			40 (354)	104 (920)	216 (1912)	7	
			29 (257)	80 (708)	192 (1699)	8	
			24 (212)	61 (540)	152 (1345)	10	
			53 (469)	140 (1239)	251 (2222)	9	2
			53 (469)	140 (1239)	274 (2425)	12	
			53 (469)	131 (1159)	274 (2425)	15	
			53 (469)	140 (1239)	274 (2425)	16	
			53 (469)	140 (1239)	274 (2425)	20	
			48 (425)	131 (1159)	274 (2425)	25	
			53 (469)	140 (1239)	274 (2425)	32	
			48 (425)	131 (1159)	274 (2425)	40	
			29 (257)	80 (708)	192 (1699)	64	
			24 (212)	61 (540)	152 (1345)	100	

(1) Ratios ($i=n_1/n_2$)
(2) Number of stages
(3) Application specific configuration with NCP – www.neugart.com
(4) Values for feather key (code "A"): for repeated load
(5) 30,000 rotations of the output shaft permitted; see page 166

Output torques			HLAE070	HLAE090	HLAE110	i[1]	p[2]
Emergency stop torque[3]	T_{2Stop}	Nm (lb_f.in)	56 (496)	170 (1505)	230 (2036)	3	1
			66 (584)	174 (1540)	310 (2744)	4	
			60 (531)	164 (1452)	342 (3027)	5	
			50 (443)	130 (1151)	270 (2390)	7	
			36 (319)	100 (885)	240 (2124)	8	
			30 (266)	76 (673)	190 (1682)	10	
			66 (584)	174 (1540)	314 (2779)	9	2
			66 (584)	174 (1540)	342 (3027)	12	
			66 (584)	164 (1452)	342 (3027)	15	
			66 (584)	174 (1540)	342 (3027)	16	
			66 (584)	174 (1540)	342 (3027)	20	
			60 (531)	164 (1452)	342 (3027)	25	
			66 (584)	174 (1540)	342 (3027)	32	
			60 (531)	164 (1452)	342 (3027)	40	
			36 (319)	100 (885)	240 (2124)	64	
			30 (266)	76 (673)	190 (1682)	100	

Input speeds			HLAE070	HLAE090	HLAE110	i[1]	p[2]
Average thermal input speed at T_{2N} and S1[4][5]	n_{1N}	rpm	4000[6]	2700[6]	2000[6]	3	1
			4000[6]	3000[6]	2000[6]	4	
			4000	3400[6]	2150[6]	5	
			4000	3500[6]	2600[6]	7	
			4000	3500	2800[6]	8	
			4000	3500	3000[6]	10	
			4000	3500[6]	2400[6]	9	2
			4000	3500[6]	2450[6]	12	
			4000	3500	2550[6]	15	
			4000	3500	2650[6]	16	
			4000	3500	2850[6]	20	
			4000	3500	2950[6]	25	
			4000	3500	3000[6]	32	
			4000	3500	3000	40	
			4000	3500	3000	64	
			4000	3500	3000	100	
Max. mechanical input speed[4]	n_{1Limit}	rpm	13,000	7000	6500		

[1] Ratios ($i=n_1/n_2$)
[2] Number of stages
[3] Permitted 1000 times
[4] Application-specific speed configurations with NCP – www.neugart.com
[5] See page 166 for the definition
[6] Average thermal input speed at 50% T_{2N} and S1

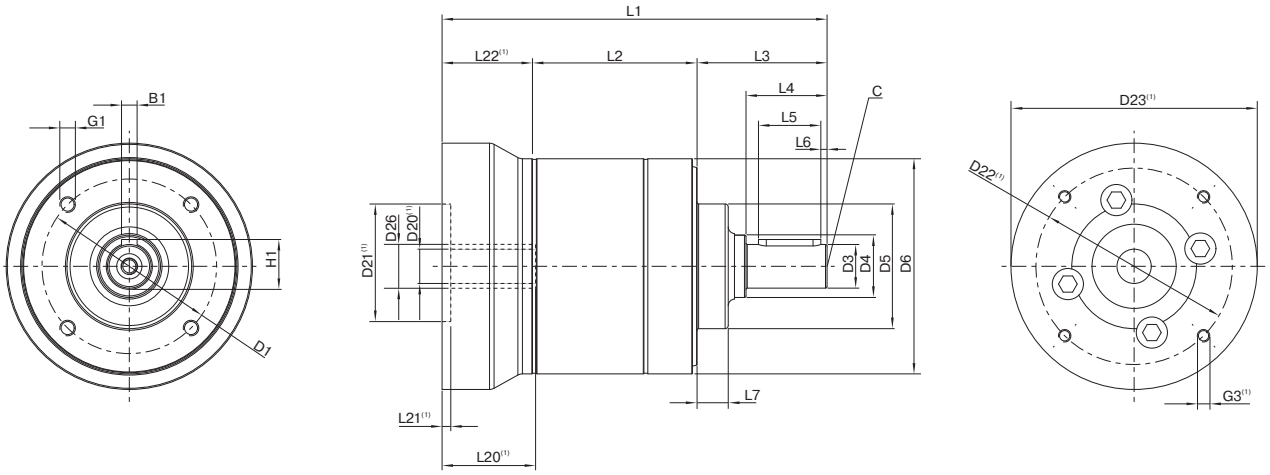

Drawing corresponds to a HLAE070 / 1-stage / output shaft with feather key / 11 mm clamping system / motor adaptation – one part / B5 flange type motor

(1) The dimensions vary with the motor/gearbox flange. The input flange dimensions can be retrieved for each specific motor in Tec Data Finder at www.neugart.com

Geometry(2)			HLAE070	HLAE090	HLAE110	p(3)	Code
Pitch circle diameter output	D1		56 (2.205)	75 (2.953)	90 (3.543)		
Shaft diameter output	D3	h7	14 (0.551)	20 (0.787)	25 (0.984)		
Shaft collar output	D4		20 (0.787)	25 (0.984)	35 (1.378)		
Centering diameter output	D5	h7	40 (1.575)	58 (2.283)	65 (2.559)		
Housing diameter	D6		69 (2.717)	88 (3.465)	109 (4.291)		
Mounting thread x depth	G1	4x	M5x11	M6x12	M8x20		
Min. total length	L1		123.5 (4.862)	146 (5.748)	191 (7.520)	1	
			135.5 (5.335)	166 (6.535)	219 (8.622)	2	
Housing length	L2		53.0 (2.087)	68.0 (2.677)	89.0 (3.504)	1	
			65.0 (2.559)	88.0 (3.465)	117.0 (4.606)	2	
Shaft length output	L3		41.7 (1.642)	50 (1.969)	66.5 (2.618)		
Centering depth output	L7		10 (0.394)	13 (0.512)	14 (0.551)		
Motor shaft diameter j6/k6	D20		More information on page 163/164				
Clamping system diameter input	D26						
Output shaft with feather key (DIN 6885-1)			A 5x5x20	A 6x6x25	A 8x7x35		A
Feather key width (DIN 6885-1)	B1		5 (0.197)	6 (0.236)	8 (0.315)		
Shaft height including feather key (DIN 6885-1)	H1		16 (0.630)	22.5 (0.886)	28 (1.102)		
Shaft length from shoulder	L4		26 (1.024)	32 (1.260)	45 (1.772)		
Feather key length	L5		20 (0.787)	25 (0.984)	35 (1.378)		
Distance from shaft end	L6		2 (0.079)	2.5 (0.098)	5 (0.197)		
Center hole (DIN 332, type DR)	C		M5x12.5	M6x16	M10x22		
Smooth output shaft							B
Shaft length from shoulder	L4		26 (1.024)	32 (1.260)	45 (1.772)		

(2) Dimensions in mm
(3) Number of stages

HLAE Sealing kit



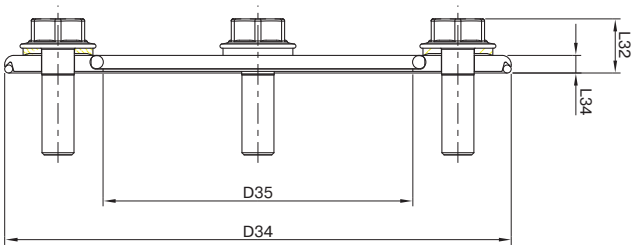

The freely positionable sealing kit for the HLAE provides maximum hygienic protection, making it universally suitable for different machine side thicknesses.
It therefore gives you maximum flexibility for connecting to the machine while satisfying the strictest hygienic requirements.

			HLAE070	HLAE090	HLAE110
Art. No.			**63911**	**63858**	**64130**
Outside diameter	D34	mm (in)	75 (2.953)	95 (3.740)	120 (4.724)
Inner diameter	D35		40 (1.575)	58 (2.283)	65 (2.559)
Overall length	L32		8.5 (0.335)	9.5 (0.374)	11.5 (0.453)
Disc length	L34		3 (0.118)	3 (0.118)	3 (0.118)
Width across flats	SW30		8 (0.315)	10 (0.394)	13 (0.512)
Quantity x screw x length	G30		4 x M5x16	4 x M6x20	4 x M8x25

For correct installation of the sealing kit, please refer to the corresponding mounting instructions (www.neugart.com). CAD data can be accessed at www.neugart.com

Included parts

1 x electropolished stainless steel disc
1 x EPDM sealing ring (seal to application)
1 x EPDM sealing ring (seal to gearbox)
4 x USIT-VA with EPDM coated sealing washer, EHEDG-compliant
4 x Hygienic Design stainless steel screw (electropolished), EHEDG-compliant

Option: Output flange design

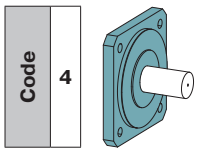

For PLN

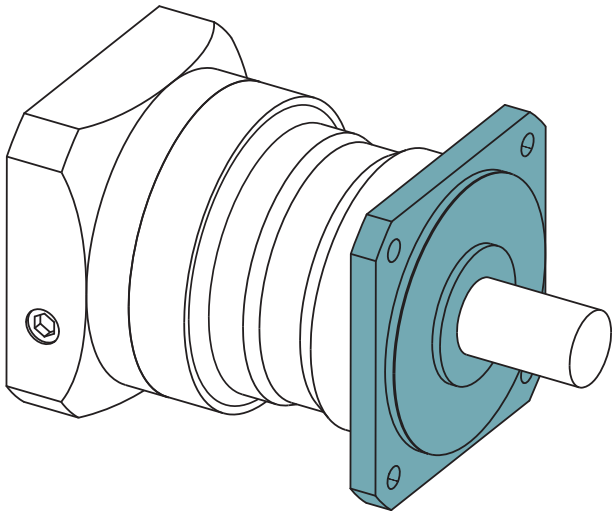

Other specifications for gearbox characteristics, output shaft loads, output torques, input speeds and dimensions not listed here correspond to the details on pages 98 to 101.

Output shaft loads			PLN070	PLN090	PLN115	PLN142	PLN190	p(1)
Radial force for 20,000 h(2)(3)	$F_{r\ 20.000\ h}$	N (lb_f)	4200 (944)	5500 (1236)	6000 (1349)	12500 (2810)	21000 (4721)	
Radial force for 30,000 h(2)(3)	$F_{r\ 30.000\ h}$		3700 (832)	4800 (1079)	5400 (1214)	11400 (2563)	18000 (4047)	
Maximum radial force(3)(4)	$F_{r\ Stat}$		4200 (944)	5500 (1236)	6000 (1349)	12500 (2810)	21000 (4721)	
Tilting moment for 20,000 h(2)(4)	$M_{K\ 20.000\ h}$	Nm (lb_f.in)	251 (2222)	383 (3390)	488 (4319)	1420 (12568)	2535 (22437)	
Tilting moment for 30,000 h(2)(4)	$M_{K\ 30.000\ h}$		221 (1956)	335 (2965)	439 (3885)	1295 (11462)	2173 (19233)	

Input speeds			PLN070	PLN090	PLN115	PLN142	PLN190	i(5)	p(1)
Average thermal input speed at T_{2N} and S1(6)(7)	n_{1N}	rpm	1850(8)	1800(8)	1400(8)	800(8)	650(8)	3	1
			2150(8)	1950(8)	1450(8)	850(8)	700(8)	4	
			2450(8)	2350(8)	1850(8)	950(8)	750(8)	5	
			3200(8)	3300(8)	2600(8)	1400(8)	1100(8)	7	
			3500(8)	3700(8)	2950(8)	1650(8)	1350(8)	8	
			4050(8)	4000(8)	3500(8)	2100(8)	1750(8)	10	
			3300(8)	3150(8)	2300(8)	1200(8)	950(8)	12	2
			3700(8)	3750(8)	2750(8)	1450(8)	1150(8)	15	
			3500(8)	3300(8)	2400(8)	1200(8)	1000(8)	16	
			4000(8)	3900(8)	2850(8)	1500(8)	1200(8)	20	
			4350(8)	4000(8)	3150(8)	1700(8)	1300(8)	25	
			4500(8)	4000	3500(8)	2100(8)	1750(8)	32	
			4500	4000	3500	2350(8)	1900(8)	40	
			4500	4000	3500	2950(8)	2400(8)	64	
			4500	4000	3500	3000	2500	100	

(1) Number of stages
(2) These values are based on an output shaft speed of n_2=100 rpm
(3) Based on center of output shaft
(4) Other (sometimes higher) values following changes to T_{2N}, F_r, F_a, cycle, and service life of bearing. Application specific configuration with NCP – www.neugart.com
(5) Ratios ($i=n_1/n_2$)
(6) Application-specific speed configurations with NCP – www.neugart.com
(7) See page 166 for the definition
(8) Average thermal input speed at 50% T_{2N} and S1

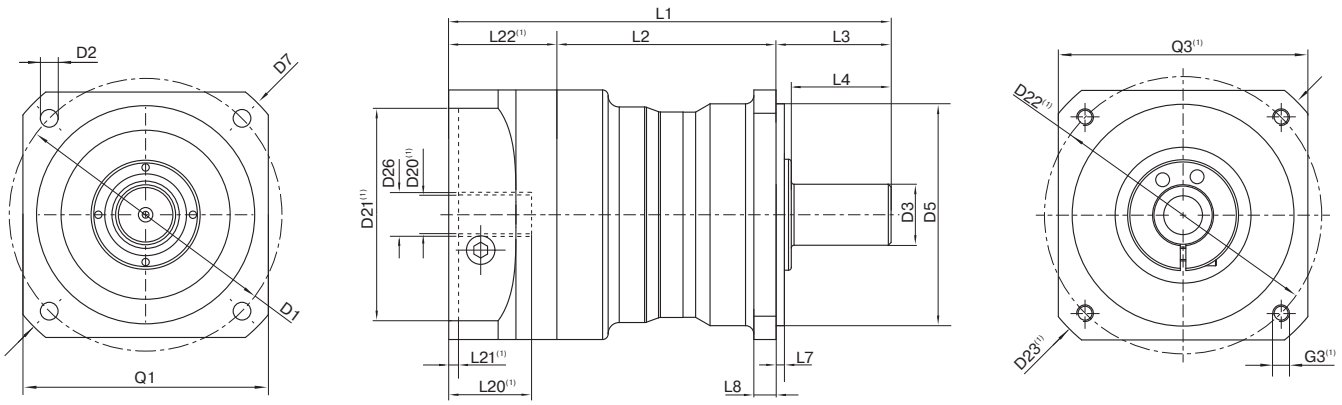

Drawing corresponds to a PLN090 / 1-stage / smooth output shaft / output flange PLS-compatible /19 mm clamping system / motor adaptation – 2-part – round universal flange / B5 flange type motor

(1) The dimensions vary with the motor/gearbox flange. The input flange dimensions can be retrieved for each specific motor in Tec Data Finder at www.neugart.com

Geometry(2)			PLN070	PLN090	PLN115	PLN142	PLN190	p(3)	Code
Pitch circle diameter output	D1		75 (2.953)	100 (3.937)	130 (5.118)	165 (6.496)	215 (8.465)		
Mounting bore output	D2	4x	5.5 (0.217)	6.5 (0.256)	8.5 (0.335)	11.0 (0.433)	13.5 (0.531)		
Shaft diameter output	D3	k6	19 (0.748)	22 (0.866)	32 (1.260)	40 (1.575)	55 (2.165)		
Centering diameter output	D5	h7	60 (2.362)	80 (3.150)	110 (4.331)	130 (5.118)	160 (6.299)		
Diagonal dimension output	D7		92 (3.622)	116 (4.567)	145 (5.709)	185 (7.283)	240 (9.449)		
Flange cross section output	Q1	■	70 (2.756)	90 (3.543)	115 (4.528)	142 (5.591)	190 (7.480)		
Min. total length	L1		137,5 (5.413)	159,5 (6.280)	201 (7.913)	276 (10.866)	310,5 (12.224)	1	
			166,5 (6.555)	191,5 (7.539)	241 (9.488)	335 (13.189)	382,5 (15.059)	2	
Housing length	L2		74,5 (2.933)	79 (3.110)	84,5 (3.327)	114.5 (4.508)	138 (5.433)	1	
			104 (4.094)	111 (4.370)	125 (4.921)	173.5 (6.831)	210 (8.268)	2	
Shaft length output	L3		32 (1.260)	41.5 (1.634)	64.5 (2.539)	87 (3.425)	90 (3.543)		
Centering depth output	L7		3 (0.118)	3 (0.118)	4.5 (0.177)	5 (0.197)	6 (0.236)		
Flange thickness output	L8		7 (0.276)	8 (0.315)	10 (0.394)	20 (0.787)	20 (0.787)		
Motor shaft diameter j6/k6	D20		More information on page 163/164						
Clamping system diameter input	D26								
Output shaft with feather key (DIN 6885-1)			A 6x6x20	A 6x6x28	A 10x8x50	A 12x8x65	A 16x10x70		A
Feather key width (DIN 6885-1)	B1		6 (0.236)	6 (0.236)	10 (0.394)	12 (0.472)	16 (0.630)		
Shaft height including feather key (DIN 6885-1)	H1		21.5 (0.846)	24.5 (0.965)	35 (1.378)	43 (1.693)	59 (2.323)		
Shaft length from shoulder	L4		28 (1.102)	36 (1.417)	58 (2.283)	80 (3.150)	82 (3.228)		
Feather key length	L5		20 (0.787)	28 (1.102)	50 (1.969)	65 (2.559)	70 (2.756)		
Distance from shaft end	L6		4 (0.157)	4 (0.157)	4 (0.157)	8 (0.315)	6 (0.236)		
Center hole (DIN 332. type DR)	C		M6x16	M8x19	M12x28	M16x36	M20x42		
Smooth output shaft									B
Shaft length from shoulder	L4		28 (1.102)	36 (1.417)	58 (2.283)	80 (3.150)	82 (3.228)		

(2) Dimensions in mm
(3) Number of stages

Option: Output flange design

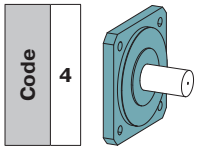

For WPLN

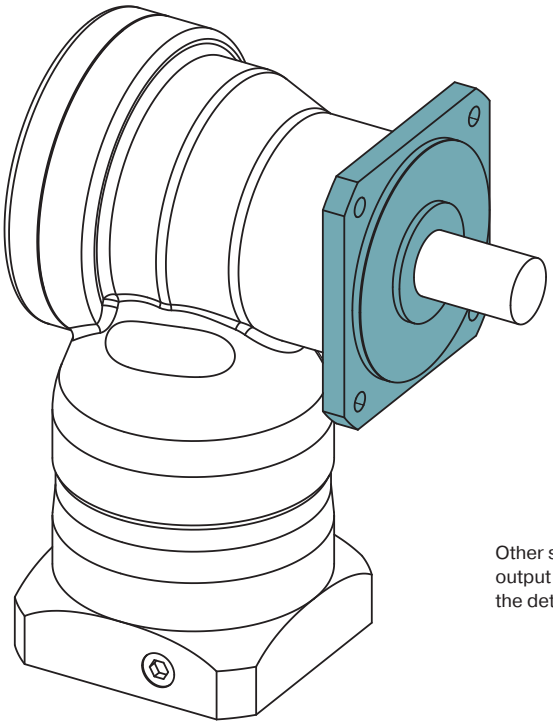

Other specifications for gearbox characteristics, output shaft loads, output torques, input speeds and dimensions not listed here correspond to the details on pages 116 to 119.

Output shaft loads			WPLN070	WPLN090	WPLN115	WPLN142	p[1]
Radial force for 20,000 h[2][3]	$F_{r\ 20.000\ h}$	N (lb_f)	4000 (899)	5200 (1169)	6000 (1349)	12500 (2810)	1
			4200 (944)	5500 (1236)	6000 (1349)	12500 (2810)	2
Radial force for 30,000 h[2][3]	$F_{r\ 30.000\ h}$		3500 (787)	4800 (1079)	6000 (1349)	10900 (2450)	1
			3700 (832)	4800 (1079)	5400 (1214)	11400 (2563)	2
Maximum radial force[3][4]	$F_{r\ Stat}$		4000 (899)	5200 (1169)	6000 (1349)	12500 (2810)	1
			4200 (944)	5500 (1236)	6000 (1349)	12500 (2810)	2
Tilting moment for 20,000 h[2][4]	$M_{K\ 20.000\ h}$	Nm (lb_f.in)	402 (3558)	624 (5523)	1010 (8939)	2225 (19693)	1
			422 (3735)	660 (5841)	1010 (8939)	2225 (19693)	2
Tilting moment for 30,000 h[2][4]	$M_{K\ 30.000\ h}$		352 (3115)	576 (5098)	1010 (8939)	1940 (17170)	1
			372 (3292)	576 (5098)	909 (8045)	2029 (17958)	2

Input speeds			WPLN070	WPLN090	WPLN115	WPLN142	i[5]	p[1]
Average thermal input speed at T_{2N} and S1[6][7]	n_{1N}	rpm	1700[8]	1550[8]	1050[8]	900[8]	4	1
			1850[8]	1750[8]	1150[8]	950[8]	5	
			2150[8]	2100[8]	1300[8]	1150[8]	7	
			2200[8]	2100[8]	1350[8]	1150[8]	8	
			2300[8]	2200[8]	1400[8]	1200[8]	10	
			1700[8]	1650[8]	1550[8]	900[8]	16	2
			1850[8]	1900[8]	1800[8]	950[8]	20	
			2000[8]	2100[8]	2000[8]	1050[8]	25	
			2000[8]	2050[8]	2000[8]	1300[8]	28	
			2100[8]	2100[8]	2050[8]	1350[8]	32	
			2200[8]	2150[8]	2050[8]	1350[8]	35	
			2200[8]	2150[8]	2050[8]	1350[8]	40	
			2300[8]	2300[8]	2250[8]	1450[8]	50	
			2400[8]	2750[8]	2700[8]	1650[8]	64	
			2500[8]	2900[8]	2850[8]	1800[8]	100	

[1] Number of stages
[2] These values are based on an output shaft speed of n_2=100 rpm
[3] Based on center of output shaft
[4] Other (sometimes higher) values following changes to T_{2N}, F_r, F_a, cycle, and service life of bearing. Application specific configuration with NCP – www.neugart.com
[5] Ratios ($i=n_1/n_2$)
[6] Application-specific speed configurations with NCP – www.neugart.com
[7] See page 166 for the definition
[8] Average thermal input speed at 50% T_{2N} and S1

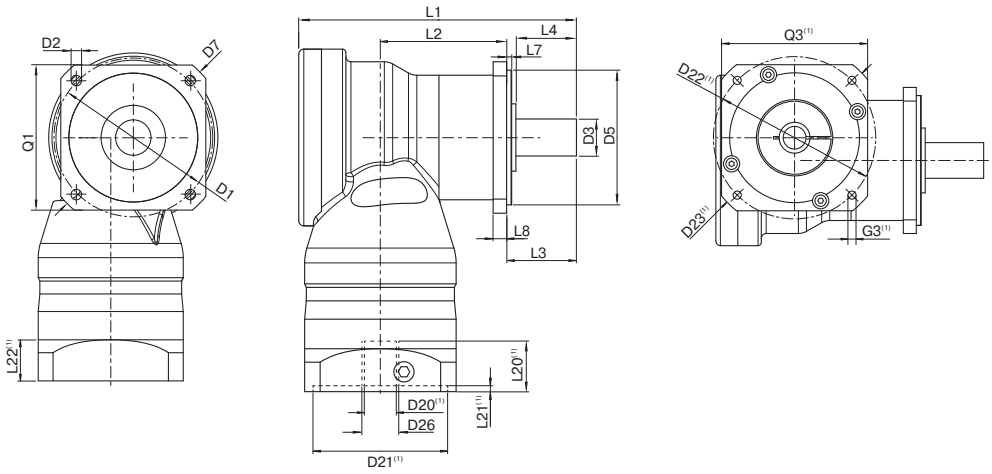

Drawing corresponds to a WPLN090 / 1-stage / smooth output shaft / output flange WPLS-compatible / 14 mm clamping system / motor adaptation – 2-part – round universal flange / B5 flange type motor

(1) The dimensions vary with the motor/gearbox flange. The input flange dimensions can be retrieved for each specific motor in Tec Data Finder at www.neugart.com

Geometry(2)			**WPLN070**	**WPLN090**	**WPLN115**	**WPLN142**	**p(3)**	**Code**
Pitch circle diameter output	D1		75 (2.953)	100 (3.937)	130 (5.118)	165 (6.496)		
Mounting bore output	D2	4x	5.5 (0.217)	6.5 (0.256)	8.5 (0.335)	11.0 (0.433)		
Shaft diameter output	D3	k6	19 (0.748)	22 (0.866)	32 (1.260)	40 (1.575)		
Centering diameter output	D5	h7	60 (2.362)	80 (3.150)	110 (4.331)	130 (5.118)		
Diagonal dimension output	D7		92 (3.622)	116 (4.567)	145 (5.709)	185 (7.283)		
Flange cross section output	Q1	■	70 (2.756)	90 (3.543)	115 (4.528)	142 (5.591)		
Total length	L1		137.5 (5.413)	165 (6.496)	218 (8.583)	273 (10.748)	1	
			185 (7.283)	207 (8.150)	248.5 (9.783)	342.5 (13.484)	2	
Housing length	L2		62.5	75	97	99	1	
			110	122.5	135.5	199	2	
Shaft length output	L3		32 (1.260)	41.5 (1.634)	64.5 (2.539)	87 (3.425)		
Centering depth output	L7		3 (0.118)	3 (0.118)	4.5 (0.177)	5 (0.197)		
Flange thickness output	L8		7 (0.276)	8 (0.315)	10 (0.394)	20 (0.787)		
Motor shaft diameter j6/k6	D20		More information on page 163/164					
Clamping system diameter input	D26							
Output shaft with feather key (DIN 6885-1)			A 6x6x20	A 6x6x28	A 10x8x50	A 12x8x65		A
Feather key width (DIN 6885-1)	B1		6 (0.236)	6 (0.236)	10 (0.394)	12 (0.472)		
Shaft height including feather key (DIN 6885-1)	H1		21.5 (0.846)	24.5 (0.965)	35 (1.378)	43 (1.693)		
Shaft length from shoulder	L4		28 (1.102)	36 (1.417)	58 (2.283)	80 (3.150)		
Feather key length	L5		20 (0.787)	28 (1.102)	50 (1.969)	65 (2.559)		
Distance from shaft end	L6		4 (0.157)	4 (0.157)	4 (0.157)	8 (0.315)		
Center hole (DIN 332. type DR)	C		M6x16	M8x19	M12x28	M16x36		
Smooth output shaft								B
Shaft length from shoulder	L4		28 (1.102)	36 (1.417)	58 (2.283)	80 (3.150)		

(2) Dimensions in mm
(3) Number of stages

Code R

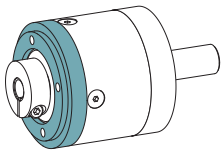

No motor adaptation – round universal flange

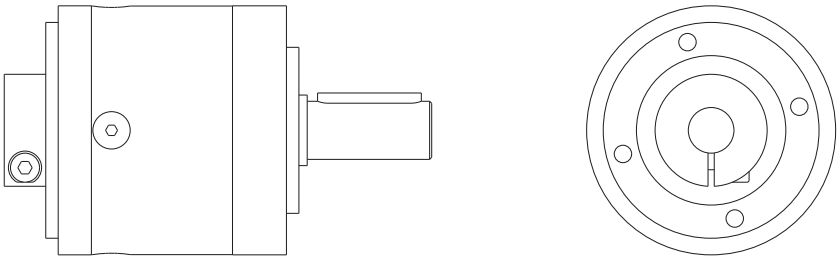

Drawing corresponds to a PLE060 / 1-stage / output shaft with feather key / 11 mm clamping system / no motor adaptation – round universal flange
All other variants can be retrieved in Tec Data Finder at www.neugart.com

This input design applies to the series, frame sizes, and associated clamping systems shown in the product code on pages 163-165.
The respective measurements can be taken from the technical data sheets in Tec Data Finder at www.neugart.com

Code T

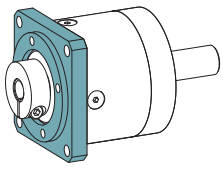

No motor adaptation – square universal flange

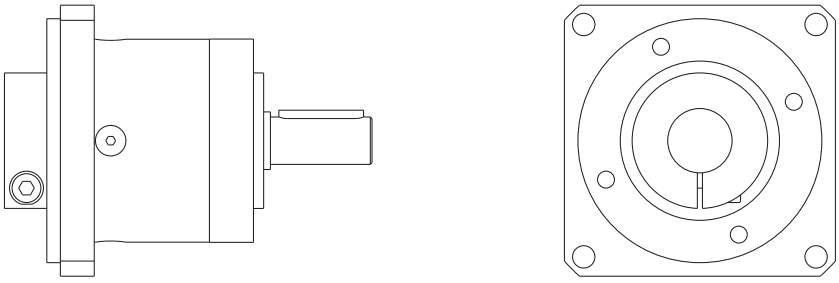

Drawing corresponds to a PLE060 / 1-stage / output shaft with feather key / 19 mm clamping system / no motor adaptation – square universal flange
All other variants can be retrieved in Tec Data Finder at www.neugart.com

This input design applies to the series, frame sizes, and associated clamping systems shown in the product code on pages 163-165.
The respective measurements can be taken from the technical data sheets in Tec Data Finder at www.neugart.com

Option: Input design

Code	
W	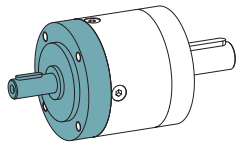

For PLE and PLQE

Gearbox characteristics not listed here correspond to the details on pages 20 to 29 - The gearboxes have to be flanged on input and output flange

Input shaft loads			PLE040 PLQE040	PLE060 PLQE060	PLE080 PLQE080	PLE120 PLQE120	PLE160	p(1)	Code
Radial force input 10,000 h(2)	$F_{r\,input}$	N (lb_f)	100 (22)	250 (56)	450 (101)	1000 (225)	1400 (315)		W
Axial force input 10,000 h(2)	$F_{a\,input}$		120 (27)	300 (67)	500 (112)	1300 (292)	1600 (360)		

Moment of inertia			PLE040 PLQE040	PLE060 PLQE060	PLE080 PLQE080	PLE120 PLQE120	PLE160	p(1)	Code
Mass moment of inertia(3)	J	kgcm² (lb_f.in.s²10⁻⁴)	0.011 - 0.020 (0.097 - 0,177)	0.049 - 0.107 (0.433 - 0.946)	0.269 - 0.587 (2.380 - 5.194)	1.034 - 1.795 (9.150 - 15.885)	2.795 - 8.999 (24.735 - 79.641)	1	W
			0.011 - 0.020 (0.097 - 0.177)	0.050 - 0.092 (0.442 - 0.814)	0.274 - 0.469 (2.424 - 4.150)	1.061 - 1.719 (9.389 - 15.213)	2.627 - 7.565 (23.248 - 66.950)	2	
			0.011 - 0.019 (0.097 - 0.177)	0.048 - 0.057 (0.424 - 0.504)	0.267 - 0.443 (2.362 - 3.920)	1.032 - 1.647 (9.133 - 14.575)	-	3	

Input speeds			PLE040 PLQE040	PLE060 PLQE060	PLE080 PLQE080	PLE120 PLQE120	PLE160	p(1)	Code
Max. mechanical input speed(4)	n_{1Limit}	rpm	18000	13000	7000	6500	4500		W

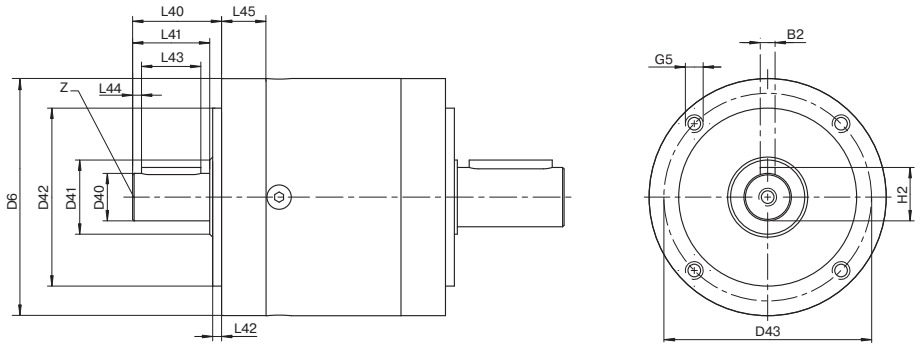

Drawing corresponds to a PLE080 / 1-stage / output shaft with feather key / input shaft – All other variants can be retrieved in Tec Data Finder at www.neugart.com

Geometry(5)			PLE040 PLQE040	PLE060 PLQE060	PLE080 PLQE080	PLE120 PLQE120	PLE160	p(1)	Code
Feather key width (DIN 6885-1)	B2		2 (0.079)	3 (0.118)	5 (0.197)	6 (0.236)	10 (0.394)		W
Housing diameter	D6		40 (1.575)	60 (2.362)	80 (3.150)	115 (4.528)	160 (6.299)		
Shaft diameter input	D40	j6	8 (0.315)	10 (0.394)	16 (0.630)	20 (0.787)	35 (1.378)		
Shaft collar input	D41		12 (0.472)	17 (0.669)	25 (0.984)	35 (1.378)	55 (2.165)		
Centering diameter input	D42	h7	26 (1.024)	40 (1.575)	60 (2.362)	80 (3.150)	110 (4.331)		
Pitch circle diameter input	D43		34 (1.339)	52 (2.047)	70 (2.756)	100 (3.937)	130 (5.118)		
Mounting thread x depth	G5	4x	M4x6	M5x8	M6x10	M10x16	M10x25		
Shaft height including feather key (DIN 6885-1)	H2		8.8 (0.346)	11.2 (0.441)	18.0 (0.709)	22.5 (0.886)	38.0 (1.496)		
Shaft length input	L40		20 (0.787)	28 (1.102)	30 (1.181)	45 (1.772)	65 (2.559)		
Shaft length from shoulder	L41		17 (0.669)	23 (0.906)	26 (1.024)	40 (1.575)	58 (2.283)		
Centering depth input	L42		2 (0.079)	3 (0.118)	3 (0.118)	4 (0.157)	5 (0.197)		
Feather key length input	L43		12 (0.472)	18 (0.709)	20 (0.787)	32 (1.260)	45 (1.772)		
Distance from shaft end input	L44		2.5 (0.098)	2.5 (0.098)	3.0 (0.118)	4.0 (0.157)	7.0 (0.276)		
Flange thickness input	L45		10.2 (0.402)	12.7 (0.500)	15.0 (0.591)	31.0 (1.220)	58.0 (2.283)		
Center hole (DIN 332, type DR)	Z		M3x9	M3x9	M5x12	M6x16	M12x28		

(1) Number of stages
(2) Based on center of shaft at n_1=1000 rpm
(3) The ratio-dependent values can be retrieved in Tec Data Finder – www.neugart.com
(4) Allowed operating temperature must be kept; other input speeds available on inquiry
(5) Dimensions in mm

Product code

PSN 090 - 005 - S S S K

Series



PLE	PLE Economy planetary gearbox
PLQE	PLQE Economy planetary gearbox
PLPE	PLPE Economy planetary gearbox
PLHE	PLHE Economy planetary gearbox
PLFE	PLFE Economy planetary gearbox
PFHE	PFHE Economy planetary gearbox
WPLE	WPLE Economy right angle gearbox
WPLQE	WPLQE Economy right angle gearbox
WPLPE	WPLPE Economy right angle gearbox
WPLHE	WPLHE Economy right angle gearbox
WPLFE	WPLFE Economy right angle gearbox
PSBN	PSBN Precision planetary gearbox
PSN	PSN Precision planetary gearbox
PLN	PLN Precision planetary gearbox
PSFN	PSFN Precision planetary gearbox
PLFN	PLFN Precision planetary gearbox
WPLN	WPLN Precision right angle gearbox
WPSFN	WPSFN Precision right angle gearbox
WGN	WGN Precision right angle gearbox
HLAE	HLAE Application specific planetary gearbox
NGV	NGV Application specific planetary gearbox

Frame size

			PLE	PLQE	PLPE	PLHE	PLFE	PFHE	WPLE	WPLQE	WPLPE	WPLHE	WPLFE	PSBN	PSN	PLN	PSFN	PLFN	WPLN	WPSFN	WGN	HLAE	NGV
040	Frame size	40	•	•					•														
050	Frame size	50			•						•												
055	Frame size	55					•																
060	Frame size	60	•	•		•			•	•		•											
064	Frame size	64					•	•					•				•	•		•			•
070	Frame size	70			•						•			•	•	•			•		•	•	
080	Frame size	80	•	•		•			•	•		•											
090	Frame size	90			•		•	•			•		•	•	•	•	•	•	•	•	•	•	•
110	Frame size	110					•	•					•				•	•		•		•	•
115	Frame size	115												•	•	•			•		•		
120	Frame size	120	•	•	•	•			•	•	•	•											
140	Frame size	140															•	•		•			
142	Frame size	142												•	•	•			•		•		
155	Frame size	155			•																		
160	Frame size	160	•																				
190	Frame size	190													•	•							
200	Frame size	200															•	•					

Ratio

			PLE	PLQE	PLPE	PLHE	PLFE	PFHE	WPLE	WPLQE	WPLPE	WPLHE	WPLFE	PSBN	PSN	PLN	PSFN	PLFN	WPLN	WPSFN	WGN	HLAE	NGV	p[3]	
003	Ratio	i = 3	•	•	•[1]	•	•	•	•	•	•	•	•	•	•	•						•			
004	Ratio	i = 4	•	•	•	•	•	•	•	•	•	•	•	•	•	•	•	•	•	•	•	•			
005	Ratio	i = 5	•	•	•	•	•	•	•	•	•	•	•	•	•	•	•	•	•	•	•	•			
007	Ratio	i = 7	•[1]	•	•[1]	•	•	•	•	•	•	•	•	•	•	•	•	•	•	•	•	•			
008	Ratio	i = 8	•	•	•[1]	•	•	•	•	•	•	•	•	•	•	•	•	•	•	•	•	•			1
010	Ratio	i = 10	•[1]	•	•	•	•	•	•	•	•	•	•	•	•	•	•	•	•	•	•	•			
009	Ratio	i = 9	•[1]	•	•[1]	•	•	•	•	•	•	•	•										•	•	
012	Ratio	i = 12	•	•	•[1]	•	•	•	•	•	•	•	•	•	•	•							•	•	
015	Ratio	i = 15	•	•	•[1]	•	•	•	•	•	•	•	•	•	•	•							•	•	
016	Ratio	i = 16	•	•	•	•	•	•	•	•	•	•	•	•	•	•	•	•	•	•			•	•	
020	Ratio	i = 20	•	•	•	•	•	•	•	•	•	•	•	•	•	•	•	•	•	•			•	•	
025	Ratio	i = 25	•	•	•	•	•	•	•	•	•	•	•	•	•	•	•	•	•	•			•	•	
028	Ratio	i = 28																	•	•					
032	Ratio	i = 32	•	•	•[1]	•	•	•	•	•	•	•	•			•		•	•	•			•	•	
035	Ratio	i = 35												•	•		•		•	•					2
040	Ratio	i = 40	•	•	•	•	•	•	•	•	•	•	•	•	•	•	•	•	•	•			•	•	
050	Ratio	i = 50			•[2]									•	•		•	•	•	•					
064	Ratio	i = 64	•	•	•[1]	•	•	•	•	•	•	•	•			•		•	•				•	•	
070	Ratio	i = 70												•	•		•			•					
060	Ratio	i = 60	•[1]	•					•	•															
080	Ratio	i = 80	•[1]	•					•	•															
100	Ratio	i = 100	•[1]	•	•	•	•	•	•	•	•	•	•	•	•	•	•	•	•	•			•		
120	Ratio	i = 120	•[1]	•					•	•															
160	Ratio	i = 160	•[1]	•					•	•															
200	Ratio	i = 200	•[1]	•					•	•															3
256	Ratio	i = 256	•[1]	•					•	•															
320	Ratio	i = 320	•[1]	•					•	•															
512	Ratio	i = 512	•[1]	•					•	•															

See next page

Clamping system diameter input

Frame size	PLE	PLQE	PLPE	PLHE	PLFE	PFHE	WPLE	WPLQE	WPLPE	WPLHE	WPLFE	PSBN	PSN	PLN	PSFN	PLFN	WPLN	WPSFN	WGN	HLAE	NGV	p[3]		
	40	40	50		55		40		50													1/2/3	8 mm	Clamping system diameter A
	40	40	50		55		40		50													1/2/3	9 mm	Clamping system diameter B
	40 60	40 60	50 70	60	55 64	64	60	60	70	60	64	70 70 90	70 70 90		64 64 90					70	64	1 2/3	11 mm	Clamping system diameter C
	60	60	70	60	64	64	60	60	70	60	64	70 90 70 90 115	70 90 70 90 115	70	64 90 64 90 110	64 64 90	70 70 90	64 64 90	70	70	64	1 2/3	14 mm	Clamping system diameter D
	60 80	60 80	70 90	60 80	64 90	64 90	80	80	90	80	90	70 90 115 70 90 115	70 90 115 70 90 115 142	70 90	64 90 110 64 90 110 140	64 90 64 90 110	70 90 70 90 115	64 90 64 90 110	70 90	90	64 90	1 2/3	19 mm	Clamping system diameter E
	80 120	80 120	90 120	80 120	90 110	90 110	120	120	120	120	110	90 115 115 142	90 115 115 142	90 115	90 110 110 140	90 110 110 140	90 115 115 142	90 110 110 140	90 115	110	90 110	1 2/3	24 mm	Clamping system diameter F
	120 160	120	120 155	120	110	110						115 142 142	115 142 142 190	115 142	110 140 140 200	110 140 140 200	115 142 142	110 140 140	115 142		110	1 2/3	35 mm	Clamping system diameter G
			155									142	142 190	142	140 200	140 200	142	140	142			1 2	42 mm	Clamping system diameter H
													190	190	200	200						1 2	48 mm	Clamping system diameter K
	•	•																						No clamping system N

Input system

PLE	PLQE	PLPE	PLHE	PLFE	PFHE	WPLE	WPLQE	WPLPE	WPLHE	WPLFE	PSBN	PSN	PLN	PSFN	PLFN	WPLN	WPSFN	WGN	HLAE	NGV	
•	•	•	•	•	•	•	•	•	•	•	•	•	•	•	•	•	•	•		•	Standard input system A
																			•		Mountable input system S

Output flange design

PLE	PLQE	PLPE	PLHE	PLFE	PFHE	WPLE	WPLQE	WPLPE	WPLHE	WPLFE	PSBN	PSN	PLN	PSFN	PLFN	WPLN	WPSFN	WGN	HLAE	NGV	
•	•	•	•	•	•	•	•	•	•	•	•	•	•	•	•	•	•	•	•	•	Standard output flange 3
													•			•					Output flange (W)PLS-compatible 4

Output shaft design

PLE	PLQE	PLPE	PLHE	PLFE	PFHE	WPLE	WPLQE	WPLPE	WPLHE	WPLFE	PSBN	PSN	PLN	PSFN	PLFN	WPLN	WPSFN	WGN	HLAE	NGV	p[3]		
•	•	•	•			•	•	•	•		•	•	•			•			•		1/2/3	Output shaft with feather key (DIN 6885-1) A	
•	•	•	•			•	•	•	•		•	•	•			•			•		1/2/3	Smooth output shaft B	
			•						•			•	•			•					1/2	Splined output shaft (DIN 5480) C	
					•									•	•		•			•	1 2	Flange output shaft D	
				•						•				•	•		•				1 2	Flange output shaft with dowel hole E	
																		•			1	Hollow output shaft on one side F	
																		•			1	Hollow output shaft on both sides G	
																	•				1 2	Flange output hollow shaft with dowel hole H	
			•						•			•	•			•					1/2	Splined output shaft (DIN 5480) with mounted pinion K	
					•									•	•		•				1/2	Flange output shaft with mounted pinion M	

Surface

PLE	PLQE	PLPE	PLHE	PLFE	PFHE	WPLE	WPLQE	WPLPE	WPLHE	WPLFE	PSBN	PSN	PLN	PSFN	PLFN	WPLN	WPSFN	WGN	HLAE	NGV	
•	•	•	•	•	•	•	•	•	•	•	•	•	•	•	•	•	•	•	•	•	Standard surface S

Lubrication

PLE	PLQE	PLPE	PLHE	PLFE	PFHE	WPLE	WPLQE	WPLPE	WPLHE	WPLFE	PSBN	PSN	PLN	PSFN	PLFN	WPLN	WPSFN	WGN	HLAE	NGV	
•	•	•	•	•	•	•	•	•	•	•	•	•	•	•	•	•	•	•		•	Standard lubrication S
•	•	•	•	•	•	•	•	•	•	•	•	•	•	•	•	•	•	•	•	•	Food grade lubrication F
•	•	•	•	•	•	•	•	•	•	•	•	•	•	•	•					•	Low temperature lubrication L

Torsional backlash

PLE	PLQE	PLPE	PLHE	PLFE	PFHE	WPLE	WPLQE	WPLPE	WPLHE	WPLFE	PSBN	PSN	PLN	PSFN	PLFN	WPLN	WPSFN	WGN	HLAE	NGV	p[3]	
•	•	•	•	•	•	•	•	•	•	•	•	•	•	•	•	•	•	•	•	•	1/2/3	Standard backlash S
											•	•	•	•	•						1	Reduced backlash R
																•	•				2	

[1] Not for frame size 155 or 160 [2] Not for frame sizes 50, 70, 90, 120 [3] Number of stages

Product code

PSN090-005-SSSK3AD - **Z** - **11** / **30** / **60** / **75** / **B5**

See previous page

Input design








Input design		Frame size (clamping system diameter)	PLE	PLQE	PLPE	PLHE	PLFE	PFHE	WPLE	WPLQE
Z	**Motor adaptation – 2-part – round universal flange**		**60** (11/14) **80** (19) **120** (24)	**60** (11/14) **80** (19) **120** (24)	**70** (11/14) **90** (19) **120** (24)	**60** (11/14) **80** (19) **120** (24)	**64** (11/14) **90** (19) **110** (24)	**64** (11/14) **90** (19) **110** (24)		
Y	**Motor adaptation – 2-part – square universal flange**		**40** (8/9/11) **60** (19) **80** (24) **120** (35) **160** (35)	**40** (8/9/11) **60** (19) **80** (24) **120** (35)	**50** (8/9/11) **70** (19) **90** (24) **120** (35) **155** (35/42)	**60** (19) **80** (24) **120** (35)	**55** (8/9/11) **64** (19) **90** (24) **110** (35)	**64** (19) **90** (24) **110** (35)	**40** (8/9) **60** (11/14) **80** (19) **120** (24)	**60** (11/14) **80** (19) **120** (24)
E	**Motor adaptation – one part**		**40** (8/9) **60** (11/14) **80** (19) **120** (24) **160** (35)	**40** (8/9) **60** (11/14) **80** (19) **120** (24)	**50** (8/9) **70** (11/14) **90** (19) **120** (24) **155** (35)	**60** (11/14) **80** (19) **120** (24)	**55** (8/9) **64** (11/14) **90** (19) **110** (24)	**64** (11/14) **90** (19) **110** (24)		
R	**No motor adaptation – round universal flange**[1]		**60** (11/14) **80** (19) **120** (24)	**60** (11/14) **80** (19) **120** (24)	**70** (11/14) **90** (19) **120** (24)	**60** (11/14) **80** (19) **120** (24)	**64** (11/14) **90** (19) **110** (24)	**64** (11/14) **90** (19) **110** (24)		
T	**No motor adaptation – square universal flange**[1]		**40** (8/9/11) **60** (19) **80** (24) **120** (35) **160** (35)	**40** (8/9/11) **60** (19) **80** (24) **120** (35)	**50** (8/9/11) **70** (19) **90** (24) **120** (35) **155** (35/42)	**60** (19) **80** (24) **120** (35)	**55** (8/9/11) **64** (19) **90** (24) **110** (35)	**64** (19) **90** (24) **110** (35)	**40** (8/9)[3] **60** (11/14)[4] **80** (19)[4] **120** (24)[4]	**60** (11/14)[4] **80** (19)[4] **120** (24)[4]
W	**No motor adaptation – input shaft**[2]		**40** (N) **60** (N) **80** (N) **120** (N) **160** (N)	**40** (N) **60** (N) **80** (N) **120** (N)						

[1] The product code ends after "motor shaft diameter" has been entered
[2] The product code ends after this option
[3] Angle only with through hole
[4] Angle only with thread

11 / **30** / **60** / **75** / **B5**

Motor shaft diameter | **Max. motor shaft length [mm]** | **Centering diameter [mm]** | **Pitch circle diameter [mm]** | **Flange type motor**

Motor shaft diameter

			For "clamping system diameter"								
			8	9	11	14	19	24	35	42	48
4	4 mm	**Motor shaft diameter**	•								
5	5 mm	**Motor shaft diameter**	•		•						
6	6 mm	**Motor shaft diameter**	•		•						
6.35	6,35 mm	**Motor shaft diameter**	•		•	•					
7	7 mm	**Motor shaft diameter**		•	•						
8	8 mm	**Motor shaft diameter**	•		•	•	•				
9	9 mm	**Motor shaft diameter**		•	•	•	•				
9.5	9,5 mm	**Motor shaft diameter**			•	•	•				
9.525	9,525 mm	**Motor shaft diameter**			•	•	•				
10	10 mm	**Motor shaft diameter**				•	•				
11	11 mm	**Motor shaft diameter**			•	•	•	•			
12	12 mm	**Motor shaft diameter**				•	•	•			
12.7	12,7 mm	**Motor shaft diameter**				•	•	•			
14	14 mm	**Motor shaft diameter**				•	•	•			
15.875	15,875 mm	**Motor shaft diameter**					•	•			
16	16 mm	**Motor shaft diameter**					•	•			
19	19 mm	**Motor shaft diameter**					•	•	•		
19.05	19,05 mm	**Motor shaft diameter**						•			
20	20 mm	**Motor shaft diameter**						•			
22	22 mm	**Motor shaft diameter**						•	•		
24	24 mm	**Motor shaft diameter**						•	•		•
28	28 mm	**Motor shaft diameter**							•		•
32	32 mm	**Motor shaft diameter**							•		•
35	35 mm	**Motor shaft diameter**							•		•
38	38 mm	**Motor shaft diameter**								•	•
42	42 mm	**Motor shaft diameter**								•	•
48	48 mm	**Motor shaft diameter**									•

Max. motor shaft length [mm]

Max. permissible motor shaft length
➔ Free text – length without decimal places

Centering diameter [mm]

Centering diameter
➔ Free text – length to max. two decimal places

Pitch circle diameter [mm]

Pitch circle diameter
➔ Free text – length to max. one decimal place

Flange type motor




		PLE	PLQE	PLPE	PLHE	PLFE	PFHE	WPLE	WPLQE	WPLPE	WPLHE	WPLFE	PSBN	PSN	PLN	PSFN	PLFN	WPLN	WPSFN	WGN	NGV	HLAE
B5	**B5 Flange type motor**	•	•	•	•	•	•	•	•	•	•	•	•	•	•	•	•	•	•	•	•	•
B14	**B14 Flange type motor**	•	•	•	•	•[1]	•	•	•	•	•	•	**Available upon inaquiry**									•

[1] Not for frame size 055

/ M5 - PK1 - 20 - 18 - S

WPLPE	WPLHE	WPLFE	PSBN	PSN	PLN	PSFN	PLFN	WPLN	WPSFN	WGN	HLAE	NGV
			70 (11/14/19) **90** (11/14/19/24) **115** (14/19/24/35) **142** (19/24/35/42)	**70** (11/14/19) **90** (11/14/19/24) **115** (14/19/24/35) **142** (19/24/35/42) **190** (35/42/48)	**70** (14/19) **90** (19/24) **115** (24)	**64** (11/14/19) **90** (11/14/19/24) **110** (14/19/24/35) **140** (19/24/35/42) **200** (35/42/48)	**64** (14/19) **90** (14/19/24) **110** (19/24) **140** (24) **200** (48)	**70** (14/19) **90** (14/19/24) **115** (19/24) **142** (24)	**64** (14/19) **90** (14/19/24) **110** (19/24) **140** (24)	**70** (14/19) **90** (19/24) **115** (24)	**70** (11/14) **90** (19) **110** (24)	**64** (11/14) **90** (19) **110** (24)
50 (8/9) **70** (11/14) **90** (19) **120** (24)	**60** (11/14) **80** (19) **120** (24)	**64** (11/14) **90** (19) **110** (24)			**115** (35) **142** (35/42) **190** (48)		**110** (35) **140** (35/42) **200** (35/42)	**115** (35) **142** (35/42)	**110** (35) **140** (35/42)	**115** (35) **142** (35/42)		**64** (19) **90** (24) **110** (35)
											70 (11/14) **90** (19) **110** (24)	**64** (11/14) **90** (19) **110** (24)
					70 (14/19) **90** (19/24) **115** (24)		**64** (14/19) **90** (14/19/24) **110** (19/24) **140** (24) **200** (48)	**70** (14/19) **90** (14/19/24) **115** (19/24) **142** (24)	**64** (14/19) **90** (14/19/24) **110** (19/24) **140** (24)	**70** (14/19) **90** (19/24) **115** (24)		**64** (11/14) **90** (19) **110** (24)
50 (8/9)[3] **70** (11/14)[4] **90** (19)[4] **120** (24)[4]	**60** (11/14)[4] **80** (19)[4] **120** (24)[4]	**64** (11/14)[4] **90** (19)[4] **110** (24)[4]			**115** (35) **142** (35/42) **190** (48)		**110** (35) **140** (35/42) **200** (35/42)	**115** (35) **142** (35/42)	**110** (35) **140** (35/42)	**115** (35) **142** (35/42)		**64** (19) **90** (24) **110** (35)

/ M5 / PK1 - 20 - 18 - S

Mounting thread / Pinion type / Module / Number of teeth / Helix angle

Helix angle

	PK1	PM1	PM2
Spur Pinion L	•		•
Helical pinion S	•	•	•

Number of teeth

Available number of teeth and possible combinations see pages 134, 136 and 138

Module

20	Module 2
30	Module 3
40	Module 4
50	Module 5

Detailed possible combinations see pages 134, 136 and 138

Pinion type

	PLE	PLQE	PLPE	PLHE	PLFE	PFHE	WPLE	WPLQE	WPLPE	WPLHE	WPLFE	PSBN	PSN	PLN	PSFN	PLFN	WPLN	WPSFN	WGN	HLAE	NGV
Pinion for splined output shaft PK1				•						•			•	•			•				
Pinion for flange output shaft PM1						•									•	•		•			
Pinion for flange output shaft PM2						•									•	•		•			

Mounting thread

M2	Mounting thread
M3	Mounting thread
M4	Mounting thread
M5	Mounting thread
M6	Mounting thread
M8	Mounting thread
M10	Mounting thread
M12	Mounting thread
M16	Mounting thread

Max. transferable output torque

Calculations of gear teeth service lives differentiate between long life and finite life. See diagram.

Long life

All Neugart planetary gearboxes are designed for the long life range within the specified nominal torques T_{2N}.
The load specifications can be reached any number of times without the gear teeth failing.

Finite life

Intermittent duty may transfer brief torque peaks or increased application factors that exceed the specified nominal torque T_{2N}.

Calculating the max application torque $T_{2application}$

* The total output shaft rotations under the increased application torques are determined.
* The resulting max increase factor f can be determined from the diagram.
* The max transferable application torque $T_{2max_application}$ is calculated:

$$T_{2max_application} = f \times T_{2N}$$

* The application torque $T_{2application}$ may not exceed the gearbox's calculated max application torque $T_{2max_application}$

$$T_{2max_application} \geq T_{2application}$$

Increase factor f as a function of the total "output shaft rotations"

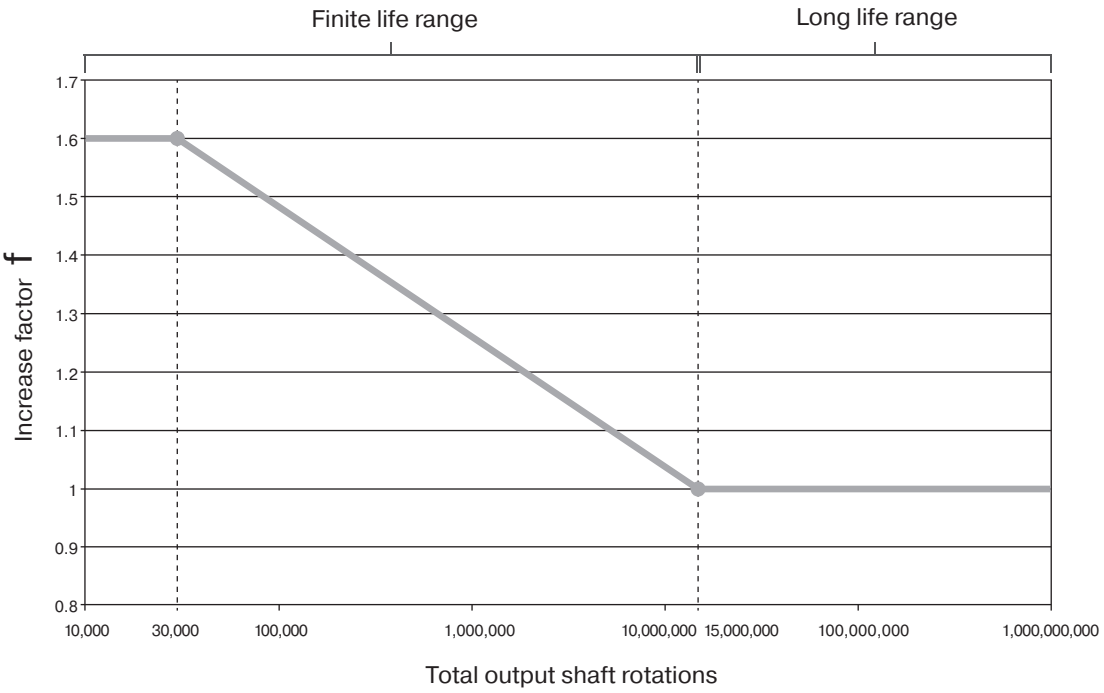

Ambient conditions

The following ambient conditions for the thermal design serve as the basis for the catalog values:

* The motor does not heat up the gearbox
* Flange mounted plate (application side):
  - Square plate = 2 x gearbox output flange size
  - Material: steel
* Plate connected via machine bed: 20°C (68°F) on one side
* No hindrance to gearbox convection
* Ambient temperature: 20°C (68°F)

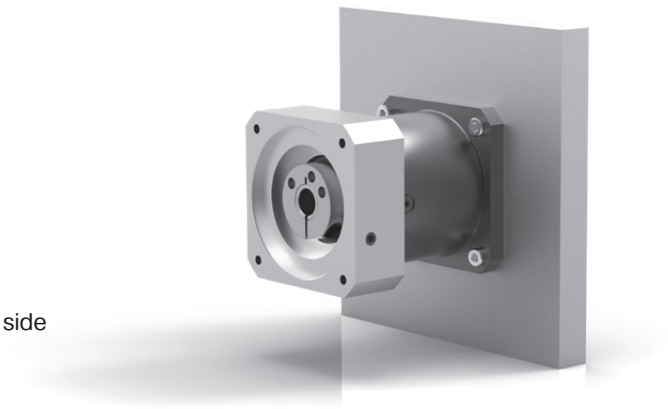

Application specific configuration with NCP – www.neugart.com



Group Headquarters
Neugart GmbH
Keltenstraße 16
77971 Kippenheim
Phone: +49 7825 847-0
Fax: +49 7825 847-2999
Email: sales@neugart.com
Web: www.neugart.com/de-de



USA Headquarters
Neugart USA Corp.
14325 South Lakes Drive
Charlotte, NC 28273
Phone: +1 980 299-9800
Fax: +1 980 299-9799
Email: sales@neugartusa.com
Web: www.neugart.com/en-us



China Headquarters
Neugart Planetary Gearboxes (Shenyang) Co., Ltd.
No.152-1, 22nd road
E&T Development Zone Shenyang,
PC 110143
Phone: +86 24 2537-4959
Fax: +86 24 2537-2552
Email: sales@neugart.net.cn
Web: www.neugart.net.cn



Italy Headquarters
Neugart Italia S.r.l.
Corso Matteotti 30
10121 Torino
Phone: +39 011 640 8248
Fax: +39 011 640 6205
Email: commerciale@neugart.it
Web: www.neugart.com/it-it



France Headquarters
Neugart France S.A.S.
28 rue Schweighaeuser
67000 Strasbourg
Phone: +33 3 30 67 35 59
Fax: +49 7825 847-2999
Email: sales@neugart.fr
Web: www.neugart.com/fr-fr



Turkey Headquarters
Neugart Redüktör San. Tic. Ltd. Şti
Burhaniye Mah. Atilla Sk. No:12
34676 Beylerbeyi – Üsküdar / İstanbul
Phone: +90 216 639 4050
Fax: +90 216 639 4052
Email: sales@neugart.com.tr
Web: www.neugart.com/tr-tr



Switzerland Headquarters
Neugart Schweiz AG
c/o Walder Wyss
Seefeldstrasse 123
8008 Zürich
Phone: +41 44 515 56 05
Email: sales@neugart.ch
Web: www.neugart.com



Brazil Headquarters
Neugart do Brasil
Equipamentos Industriais Ltda
Acesso José Sartorelli,
km 2,1 - Prédio 1 Ala B,
Parque das Árvores
SP CEP 18555-225 Boituva
Phone: +55 15 3363-9910
Fax: +55 15 3363-9911
Email: comercial@neugart.com.br
Web: www.neugart.com/pt-br



Germany Baden-Wuerttemberg
Jan Baaß
77694 Kehl
Phone: +49 151 18817660
Email: jan.baass@neugart.com
Web: www.neugart.com/de-de



Germany Baden-Wuerttemberg
Thomas Malig
76275 Ettlingen
Phone: +49 151 18812756
Email: thomas.malig@neugart.com
Web: www.neugart.com/de-de



Germany Bavaria
Helmut Schwarz
85241 Hebertshausen
Phone: +49 171 7587709
Email: helmut.schwarz@neugart.com
Web: www.neugart.com/de-de



Germany Bavaria
Karl-Heinz Sippel
97074 Würzburg
Phone: +49 171 8812757
Email: karl-heinz.sippel@neugart.com
Web: www.neugart.com/de-de



Central Germany/Western Germany
Hans-Jürgen Becker
63739 Aschaffenburg
Phone: +49 151 18812750
Email: hans-juergen.becker@neugart.com
Web: www.neugart.com/de-de



Northern Germany/Western Germany
Marco Stührenberg
32758 Detmold
Phone: +49 151 18812751
Email: marco.stuehrenberg@neugart.com
Web: www.neugart.com/de-de



Eastern Germany
Sebastian Gruner
09224 Chemnitz
Phone: +49 151 18817647
Email: sebastian.gruner@neugart.com
Web: www.neugart.com/de-de



Austria
TAT-TECHNOM-Antriebstechnik GmbH
Technologiering 13 - 17
4060 Leonding
Phone: +43 7229 64840-0
Fax: +43 7229 64840-99
Email: tat@tat.at
Web: www.tat.at



Belgium
Automotion
Bilksken 36
9920 Lovendegem
Phone: +32 93 705555
Fax: +32 93 705550
Email: info@automotion.be
Web: www.automotion.be



Czech Republic
TAT – POHONOVÁ TECHNIKA s.r.o.
370 06 České Budějovice
Hraniční 2253
Phone: +420 387 414-414
Fax: +420 387 414-415
Email: tat@cz.tat.at
Web: www.tat.cz



Denmark
ServoTech A/S
Ulvehavevej 44B
7100 Vejle
Phone: +45 7942 80 80
Email: sales@servotech.dk
Web: www.servotech.dk



Finland
Oy Movetec Ab
Suokalliontie 9
01740 Vantaa
Phone: +358 9 5259-230
Fax: +358 9 5259-2333
Email: info@movetec.fi
Web: www.movetec.fi



France
Neugart France S.A.S.
28 rue Schweighaeuser
67000 Strasbourg
Phone: +33 3 30 67 35 59
Fax: +49 7825 847-2999
Email: sales@neugart.fr
Web: www.neugart.com/fr-fr



Greece
KYMA Automation
Mesaio 54500
Thessaloniki
Phone: +30 2310 786002
Fax: +30 2310 011812
Email: info@kyma-automation.gr
Web: www.kyma-automation.gr



Italy
Neugart Italia S.r.l.
Corso Matteotti 30
10121 Torino
Phone: +39 011 640 8248
Fax: +39 011 640 6205
Email: commerciale@neugart.it
Web: www.neugart.com/it-it



Italy
Bianchi Industrial Spa
Via G. Zuretti 100
20125 Milano
Phone: +39 02 678 61
Fax: +39 02 670 1062
Email: info@bianchiindustrial.it
Web: www.bianchi-industrial.it



Netherlands
Caldic Techniek B.V.
Schuttevaerweg 60
3044 BB Rotterdam
Phone: +31 104 156622
Fax: +31 104 378810
Email: info@caldic-techniek.nl
Web: www.caldic.com



Netherlands
ABI b.v.
Minckelersweg 22
2031 EM Haarlem
Phone: +31 23 531 9292
Fax: +31 23 532 6599
Email: info@abi.nl
Web: www.abi.nl



Norway
Aratron AS
Bjørnerudveien 17
1266 Oslo
Phone: +47 23 19 1660
Fax: +47 23 19 1661
Email: firmapost@aratron.no
Web: www.aratron.no



Poland
P.P.H. WObit E.K.J. Ober s.c.
Dęborzyce 16
62-045 Pniewy
Phone: +48 61 2227-410
Fax: +48 61 2227-439
Email: wobit@wobit.com.pl
Web: www.wobit.com.pl



Slovenia
MB-NAKLO d.o.o
Ulica Toma Zupana 16
4202 Naklo
Slovenija
Phone: +386 4 277 17 00
Fax: +386 4 277 17 17
Email: info@mb-naklo.si
Web: www.mb-naklo.si



Spain
Brotomatic, S.L.
C/San Miguel de Acha, 2-Pab. 3
01010 Vitoria-Gasteiz (Álava)
Phone: +34 945 249411, 249776
Fax: +34 945 227832
Email: broto@brotomatic.es
Web: www.brotomatic.es



Sweden
SDT Scandinavian Drive Technologies
Sabelgatan 4
254 67 Helsingborg
Phone: +46 42 380800
Fax: +46 42 380813
Email: info@sdt.se
Web: www.sdt.se



Switzerland
Neugart Schweiz AG
c/o Walder Wyss
Seefeldstrasse 123
8008 Zürich
Phone: +41 44 515 56 05
Email: sales@neugart.ch
Web: www.neugart.com



United Kingdom
HMK Automation Group Ltd
Kappa House, Hatter Street
Congleton
Cheshire CW12 1QJ
Phone: +44 1260 279411
Fax: +44 1260 281022
Email: sales@hmkdirect.com
Web: www.hmkdirect.com



Turkey
Neugart Redüktör San. Tic. Ltd. Şti
Burhaniye Mah. Atilla Sk. No:12
34676 Beylerbeyi – Üsküdar / İstanbul
Phone: +90 216 639 4050
Fax: +90 216 639 4052
Email: sales@neugart.com.tr
Web: www.neugart.com/tr-tr



Brazil/Argentina
Neugart do Brasil
Equipamentos Industriais Ltda
Acesso José Sartorelli,
km 2,1 - Prédio 1 Ala B,
Parque das Árvores
SP CEP 18555-225 Boituva
Phone: +55 15 3363-9910
Fax: +55 15 3363-9911
Email: comercial@neugart.com.br
Web: www.neugart.com/pt-br



China
Neugart Planetary Gearboxes (Shenyang) Co., Ltd.
No.152-1, 22nd road
E&T Development Zone Shenyang,
PC 110143
Phone: +86 24 2537-4959
Fax: +86 24 2537-2552
Email: sales@neugart.net.cn
Web: www.neugart.net.cn



India
Fluro Engineering PVT. Ltd.
Plot No.B-29/1, MIDC,
Taloja, Dist. Raigad,
Navi Mumbai - 410208
Maharashtra
Phone: +91 22 2741-1922, 2740-1153
Fax: +91 22 2741-1933
Email: sales@fluroengg.com
Web: www.fluroengg.com



Israel
SUZIN TRANSMISSION SYSTEM LTD.
HaTa'asiya 47 St.
3688847 Nesher
Phone: +972 4 8724148, 8725708
Fax: +972 4 8414284
Email: info@suzin.co.il
Web: www.suzin.co.il



South Korea
Intech Automation Inc.
135, Jeongnamsandan-ro,
Jeongnam-myeon, Hwaseong-si,
Gyeonggi-do, 18514 Republic of Korea
Phone: +82 31 377 1030
Fax: +82 31 377 10310
Email: intech@intechautomation.co.kr
Web: www.intechautomation.co.kr



Turkey
Neugart Redüktör San. Tic. Ltd. Şti
Burhaniye Mah. Atilla Sk. No:12
34676 Beylerbeyi – Üsküdar / İstanbul
Phone: +90 216 639 4050
Fax: +90 216 639 4052
Email: sales@neugart.com.tr
Web: www.neugart.com/tr-tr

Economy Line

Precision at an attractive price.
The economical gearbox model series with an outstanding price/performance ratio. The Economy model series impresses with high precision of up to 6 arcmin of torsional backlash and a high performance density, a wide range of variants and numerous adaptation options.

Precision Line

The Precision Line is suitable for anyone who wants precision.The standard torsional backlash of 3 arcmin and optionally 1 arcmin provides maximum precision for the application. Special bearing and gasket technologies and cage-type planetary carriers increase the performance of the Precision Line. The model series is completed by special low-vibration and high-performance right angle gearboxes with hypoid teeth.

Application-specific gearbox

These gearboxes are optimized for application-specific requirements.
Hygienic Design gearboxes meet the sensitive requirements in the food and pharmaceutical sectors. For use in industrial fork lift trucks, the clever concept of the NGV planetary gearbox with matching wheel offers a solution with added value.

Navigation aid:
On the following pages you will find
detailed explanations
of the technical features of our gearboxes.

Transmission direction

Coaxial gearbox

The input and the output shafts are in a straight line.

Right angle gearbox



The input shaft and the output shaft are offset from each other by 90°.

Rotation direction

Equidirectional rotation

The input and the output shaft rotate in the same direction.

Counterdirectional rotation

The drive shaft and the output shaft rotate in opposite directions.

Gearing

Spur gear

Maximum torques can be transmitted with straight teeth. This significantly increases the performance density of the gearbox.

Helical gear

Helical teeth reduce the amount of operating noise. Vibration is reduced to a minimum. The surface quality is therefore increased when used in processing machines.

Category



Economy Line

Precision at an attractive price.
The economical gearbox model series with an outstanding price/performance ratio. The Economy model series impresses with high precision of up to 6 arcmin of torsional backlash and a high performance density, a wide range of variants and numerous adaptation options.



Precision Line

The Precision Line is suitable for anyone who wants precision.The standard torsional backlash of 3 arcmin and optionally 1 arcmin provides maximum precision for the application. Special bearing and gasket technologies and cage-type planetary carriers increase the performance of the Precision Line. The model series is completed by special low-vibration and high-performance right angle gearboxes with hypoid teeth.



Application-specific gearbox

These gearboxes are optimized for application-specific requirements.
Hygienic Design gearboxes meet the sensitive requirements in the food and pharmaceutical sectors. For use in industrial fork lift trucks, the clever concept of the NGV planetary gearbox with matching wheel offers a solution with added value.

Transmission direction



Coaxial gearbox

The input and the output shafts are in a straight line.



Right angle gearbox

The input shaft and the output shaft are offset from each other by 90°.

Rotation direction



Equidirectional rotation

The input and the output shaft rotate in the same direction.



Counterdirectional rotation

The drive shaft and the output shaft rotate in opposite directions.

Gearing



Spur gear

Maximum torques can be transmitted with straight teeth. This significantly increases the performance density of the gearbox.



Helical gear

Helical teeth reduce the amount of operating noise. Vibration is reduced to a minimum. The surface quality is therefore increased when used in processing machines.

Gearing



Bevel gear right angle stage

A bevel gear set with straight gearing and a 1:1 transmission ratio is used for the angle step. This angle step technology combines a low installation space requirement with high performance capability. The two axes operate on one level, i.e. without an axis offset.



Hypoid gear right angle stage

Because of its hypoid teeth, this right angle gearbox operates smoothly and with little vibration. Another advantage of this type of gearing is low noise generation. Both axes are offset to each other, i.e. they are on different levels.

Output flange

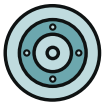

Round type output flange

The standard interface for uncomplicated, easy assembly. A threaded hole in the machine unit or countering with threaded nuts is not required. The gearbox is directly attached to the threaded holes in the gearbox at the application side with four screws.



Square type output flange

Because of the square output flange, the gearbox can be screwed directly to the machine without an intermediate flange. The output flange with through holes makes simple but secure installation and universal accessibility possible.



Extra large round type output flange

The large installation flange with 8 or 12 screw-on holes makes the transmission of extremely high torques possible.

Bearing



Low-friction deep groove ball bearings

Thanks to the low-friction bearing concept, the gearbox is optimally designed for fast rotation speeds. The low heat development of this bearing makes permanently fast rotation speeds possible without affecting performance.



Reinforced deep groove ball bearings

Extra-large deep groove ball bearings make it possible to absorb high levels of radial and axial force. The drive elements can be fitted directly to the output shaft without additional bearing components.



Preloaded tapered roller bearings

Tapered roller bearings that are pre-stressed in pairs provide additional, permanent rigidity. Even with variable operating directions, the output bearings remain exact.



Preloaded angular contact roller bearings

Inclined roller bearings arranged in pairs with a large diameter make maximum radial and axial force possible. The tilting moment of the gearbox also increases to a considerable extent. Gearboxes equipped with inclined roller bearings are ideal for rotary tables or rack and pinion applications.

Seals



Rotary shaft seal

The pre-tensioned radial shaft seal designed by Neugart resists dust and jets of water achieving an IP65 protection class.



Option: FFKM seal

An FFKM seal can optionally be used for greater resistance to chemicals and heat.

Others



Option: Reduced backlash

Reduced backlash with < 1 arcmin for coaxial gearboxes, or < 3 arcmin for right angle gearboxes can be optionally selected for maximum accuracy.



Option: Splined output shaft (DIN 5480)

A splined output shaft in accordance with DIN 5480 can be optionally used.



Option: Planetary gearbox with mounted pinion

The planetary gearboxes are combined with helical-cut or straight-cut pinions, and can be installed directly into your rack-and-pinion application.



High ratio variety

These gearboxes have an extremely wide range of different transmission ratios ranging from i=3 to i=512.



Extra long centering collar

The long centering collar moves the output bearing closer to the application and thus improves the support of the radial forces without increasing the axial installation space.



Flange output shaft ISO 9409-1

The standardized flange interface in accordance with ISO 9409-1 guarantees of quick and easy installation of drive components such as belt pulleys, linear units and turntables. The torsional stiffness of this gearbox is several times greater than those versions with normal output shafts. The integrated dowel pin drill hole provides additional stability during installation. The gearbox is also optionally available without a dowel pin drill hole, but comes with with a different thread instead.



Planet carrier in disc design

The planets are supported at one side in the disk version of the planetary carrier. With this planetary carrier design, the mass inertia of the gearbox is reduced and the dynamics are therefore significantly increased.



Planet carrier in cage design

The cage design of the planetary carrier increases the torsional stiffness of the gearbox considerably, since the planets are supported at both sides. The gearbox becomes more torsionally rigid with much more accurate positioning. Greater torque can also be transmitted.



Hollow shaft

A hollow shaft with 1-stage gearboxes allows flexible line leadthrough towards the application.



Hollow shaft for clamping system with shrink disc

A hollow shaft makes it possible to use a clamping system with a shrink disc for force-fitting connection of the machine shaft. Clamping at both sides is possible, and lines can also be led through.

Neugart GmbH
Keltenstraße 16
77971 Kippenheim
Germany
Phone: +49 7825 847-0
Fax: +49 7825 847-2999
Email: sales@neugart.com
Web: www.neugart.com

Neugart USA Corp.
14325 South Lakes Drive
Charlotte, NC 28273
USA
Phone: +1 980 299-9800
Fax: +1 980 299-9799
Email: sales@neugartusa.com
Web: www.neugart.com/en-us

Neugart Planetary Gearboxes (Shenyang) Co., Ltd.
No.152, 22nd road
E&T Development Zone Shenyang, PC 110143
PR China
Phone: +86 24 2537-4959
Fax: +86 24 2537-2552
Email: sales@neugart.net.cn
Web: www.neugart.net.cn

100324320 Complete gearbox catalog 10.2023 · Subject to modifications