Synchronous Servomotors

Product Range LSN and LST

Order Catalogue

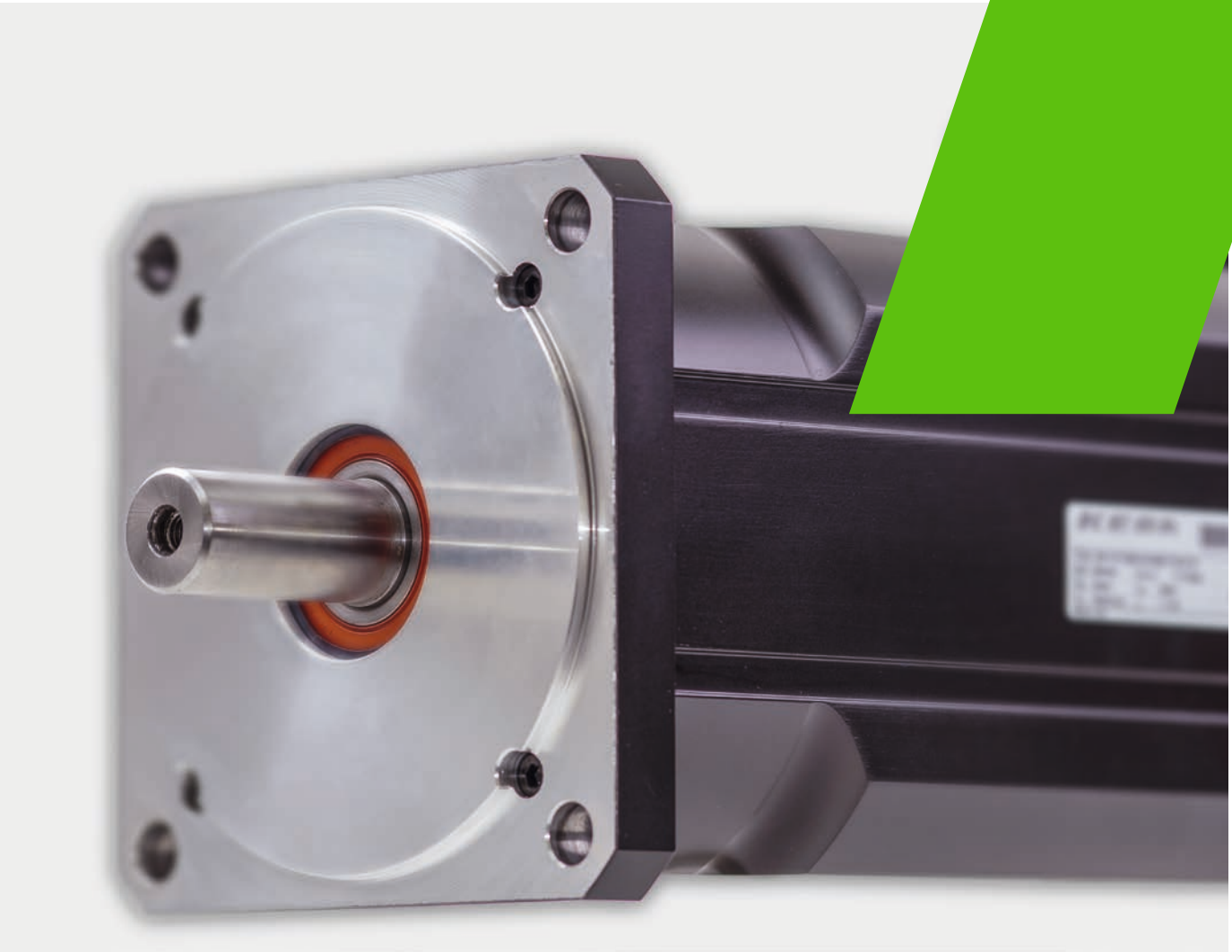

Product range LSN stall torque 0.26 to 60 Nm
Product range LST stall torque 0.1 to 115 Nm

KEBA®

Automation by innovation.

LSN/ LST Servomotors Order Catalogue

ID no.: 0814.25B.8-00

Date: 11/2022

Subject to technical change without notice.
The content of our catalogue was compiled with the greatest care and attention, and based on the latest information available to us.
We should nevertheless point out that this document cannot always be updated simultaneously with the ongoing technical development of our products.
Information and specifications may be subject to change at any time. Please obtain information about the latest version at www.keba.com.

The German version is the original of this order catalogue.

NOTE:
The latest catalogue and other documents are available in German and English and can be downloaded from our homepage
https://www.keba.com/de/industrial-automation/service-support/downloads/doku-data-portal

Register

Chapter - 1 Basic information about the servomotors from KEBA 1

Chapter - 2 The LSN servomotor – compact and low-cost 2

Chapter - 3 The LST servomotor – versatile with large performance range 3

Chapter - 4 Connection system 4

Chapter - 5 Servomotor accessories 5

Chapter - 6 Appendix 6

Chapter - 7 ATEX 7

Table of contents

Definition of the most important terminology 7

1 Basic information about the servomotors from KEBA 9
1.3 Properties of LSN/LST servomotors 12
1.4 Cooling 13
1.5 Accuracies and system characteristics, encoder types, LSN/LST 14
1.6 Declaration of conformity for LSN/LST servomotors 16

2 The LSN servomotor – compact and low-cost 21
2.1 Applications 21
2.2 Performance features of the LSN servomotors 21
2.3 Order codes, KEBA synchronous motors in the LSN product range 22
2.4 Features of the standard version 24
2.5 Ordering example LSN servomotors: 24
2.6 Ordering options 24
2.6.1 Radial and axial force, servomotor without brake 26
2.6.2 Radial and axial force, servomotor with brake 26
2.6.3 Technical data, design 27
2.7 Overview of LSN servomotors 28
2.7.1 Technical data 28
2.8 Technical data LSN-050 (U_{dc} = 320 + 560 VDC) 30
2.8.1 Dimensional sketch LSN-050 31
2.8.2 Characteristics LSN-050 32
2.9 Technical data LSN-074 (U_{dc} = 320 + 560 VDC) 36
2.9.1 Dimensional sketch LSN-074 37
2.9.2 Characteristics LSN-074 38
2.10 Technical data LSN-097 (U_{dc} = 320 + 560 VDC) 42
2.10.1 Dimensional sketch LSN-097 43
2.10.2 Characteristics LSN-097 44
2.11 Technical data LSN-127 (U_{dc} = 560 VDC) 48
2.11.1 Dimensional sketch LSN-127 49
2.11.2 Characteristics LSN-127 50
2.12 Technical data LSN-158 (U_{dc} = 560 VDC) 52
2.12.1 Dimensional sketch LSN-158 53
2.12.2 Characteristics LSN-158 54

2.13 Technical data LSN-190 (U_{dc} = 560 VDC) 58
2.13.1 Dimensional sketch LSN-190 59
2.13.2 Characteristics LSN-190 60

3 The LST servomotor – versatile with large performance range 65
3.1 Applications 65
3.2 Performance features of the LST servomotors 65
3.3 Order codes, KEBA synchronous motors in the LST product range 66
3.4 Features of the standard version 68
3.5 Ordering example LST servomotors: 68
3.6 Radial and axial force, servomotor without brake 69
3.7 Overview of LST servomotors 71
3.8 Technical data LST-037 (U_{dc} = 320 VDC) 72
3.8.1 Dimensional sketch LST-037 73
3.8.2 Characteristics LST-037 74
3.9 Technical data LST-050 (U_{dc} = 320 VDC) 76
3.9.1 Dimensional sketch LST-050 77
3.9.2 Characteristics LST-050 78
3.10 Technical data LST-074 (U_{dc} = 320 + 560 VDC) 80
3.10.1 Dimensional sketch LST-074 81
3.10.2 Characteristics LST-074 82
3.11 Technical data LST-097 (U_{dc} = 320 + 560 VDC) 86
3.11.1 Dimensional sketch LST-097 87
3.11.2 Characteristics LST-097 88
3.12 Technical data LST-127 (U_{dc} = 560 VDC) 92
3.12.1 Dimensional sketch LST-127 93
3.12.2 Characteristics LST-127 94
3.13 Technical data LST-158 (U_{dc} = 560 VDC) 96
3.13.1 Dimensional sketch LST-158 97
3.13.2 Characteristics LST-158 98
3.14 Technical data LST-190 (U_{dc} = 560 VDC) 100
3.14.1 Dimensional sketch LST-190 101
3.14.2 Characteristics LST-190 102
3.15 Technical data LST-220 (U_{dc} = 560 V) 104
3.15.1 Dimensional sketch LST-220 105
3.15.2 Characteristics LST-220 106

3.16 LST servomotors for functional extra-low voltage (24/48 VDC windings) 109
3.17 Technical data LST-037 (U_{dc} = 24/48 VDC) 110
3.17.1 Dimensional sketch LST-037 (U_{dc} = 24/48 VDC) 110
3.17.2 Characteristics LST-037 (U_{dc} = 24/48 VDC) 112

4 Connection system 113
4.1 Encoder connections 115
4.1.1 Power connections 115
4.1.2 Hybrid connections (power and encoder) 116
4.1.3 Cable glands 117

5 Servomotor accessories 119

6 Appendix 121
6.1 Holding brake 121
6.1.1 Response times of holding brakes 121
6.1.2 Technical data for holding brake 122
6.2 External fans 123
6.2.1 Connection diagram assignments 123
6.2.2 Technical data for fan units 124
6.2.3 External fan LSx 097 125
6.2.4 External fan LSx 127 126
6.2.5 External fan LSx 158 127
6.2.6 External fan LSx 190 128
6.2.7 External fan LST 220 BG 1-3 129
6.2.8 External fan LST 220 BG 3+B / BG 4 130

7 ATEX 131
7.1 Declaration of conformity with explosion protection 132

Definition of the most important terminology

Stall torque M_0 [Nm]	The stall torque can be output for an unlimited time at speed n=0 min^{-1} and in rated ambient conditions.
Rated torque M_n [Nm]	The rated torque is output if the motor is drawing rated current at rated speed. The rated torque can be output for an unlimited time at rated speed in continuous operation.
Stall current I_0 [A]	The stall current is the effective sinusoidal current the motor draws at standstill to output the stall torque.
Rated current I_n [A]	The rated current is the effective sinusoidal current the motor draws at rated speed to output the rated torque.
Maximum permissible current (peak current) I_{max} [A]	The peak current (effective sinusoidal value) should not be more than 4 times the rated current. The peak current of the inverter used determines the actual value.
Torque constant K_T [Nm/A]	The torque constant specifies how much torque in Nm the motor generates with 1 A effective sinusoidal current. The following applies: $M=I \times K_T$
EMF constant K_E [V/1000 min^{-1}]	The EMF constant specifies the motor EMF induced between two terminals as a sinusoidal peak value, referred to 1000 rev/min.
Moment of inertia of rotor J [$kgcm^2$]	The constant J is a measure of the mass inertia of the motor.
Thermal time constant T_{th} [min]	The constant T_{th} specifies the warm-up time for the cold motor under load with I_0 until 0.63 x 105 Kelvin overtemperature is reached. Under load with peak current, the warm-up time is significantly shorter.
Rated speed n_n [min^{-1}]	The rated speed is the speed at which a servomotor outputs the rated power at the rated load.

Space for your notes

1 Basic information about the servomotors from KEBA

1.1 Selecting the right motor: LSN or LST?

Irrespective of which variant you chose, you will have selected a high quality synchronous servomotor.
The complete servomotor product range from KEBA has high quality bearings, the same unchanged flange, the same insulation system and the same encoder system. In short, the mechanics are absolutely identical and of the highest quality!
The LST motor differs from the LSN motor in the arrangement of the stator core and the number of pole pairs on the rotor. While the LSN motor has a concentrated winding, the LST motor relies on the conventional 6-pole stator winding with the familiar characteristics of a dynamic synchronous servomotor with neodymium iron boron magnets.
While the LST motor has a relatively large end winding due to the conventional so-called "distributed winding", this is not the case on the LSN motor due to the so-called "concentrated winding". Particularly on motors with a short laminated core, the usual end winding on the LST is half the length of the stator. This stator length, not required for producing torque, is not present on the LSN motors. The result is a shorter motor with higher torque and up to 100% more dynamic performance. Furthermore, we can offer the LSN motors at prices 20% lower due to the savings in material and manufacturing effort.
The winding is designed as a compound-die pole winding. An optimised thermal design has increased the power density. As such the LSN servomotors are not only of high quality and extremely powerful with their power density and dynamic performance, they are high-end.

1.1.1 The various properties at a glance:

	Preferred LSN motor types (depending on options)	**LST motor types**
Winding technology	As concentrated winding like product range H, however compound-die pole winding	Conventional "distributed" winding
Arrangement	10-pole rotor (except: LSN-050 = 6-pole)	6-pole arrangement
Rated frequency	Up to 250 Hz at 3000 min^{-1} (except: LSN-050 up to 225 Hz at 4500 min^{-1})	Up to 150 Hz at 3000 min^{-1}
Running behaviour	Good	Very good
Sizes	LSN-050 to LSN-190	LST-037 to LST-220

Table 1.1 LSN servomotors – preferred types because lower cost, technically state-of-the-art and reduced delivery times.

1.2 Comparison of torque characteristics

LSN-097-0750-30-320

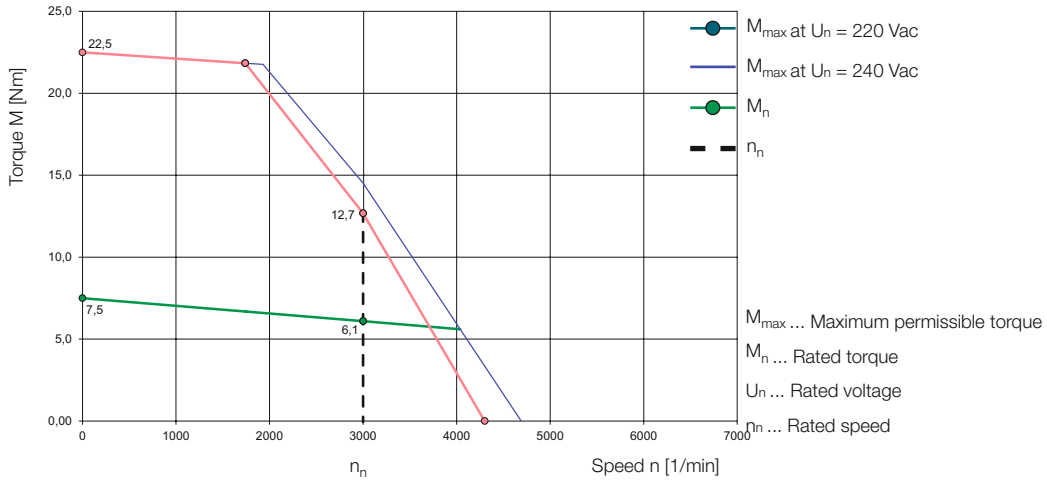

LST-097-2-30-320

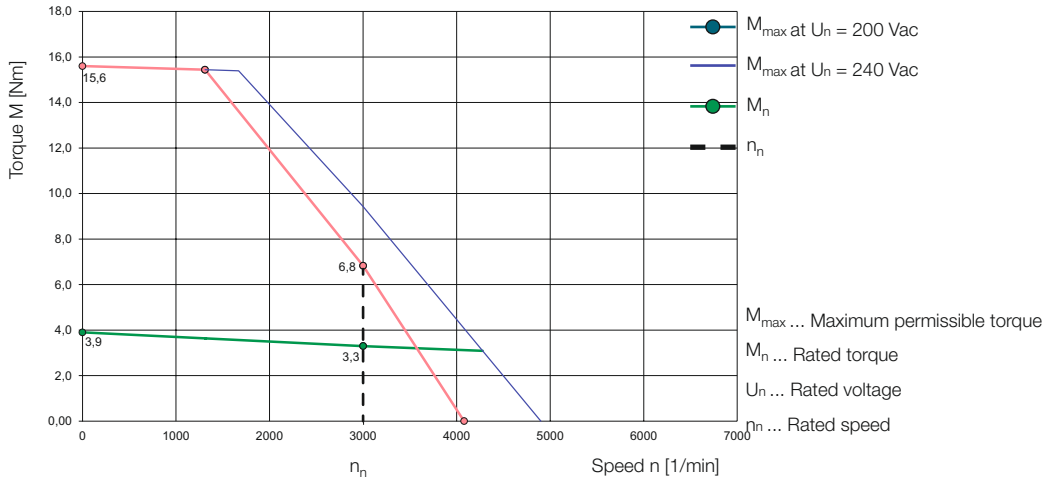

1.2.1 Typical torque against speed with field-weakening range characteristic for the LSN and LST servomotors

The characteristic shows how the speed of the servomotor behaves with increasing load.

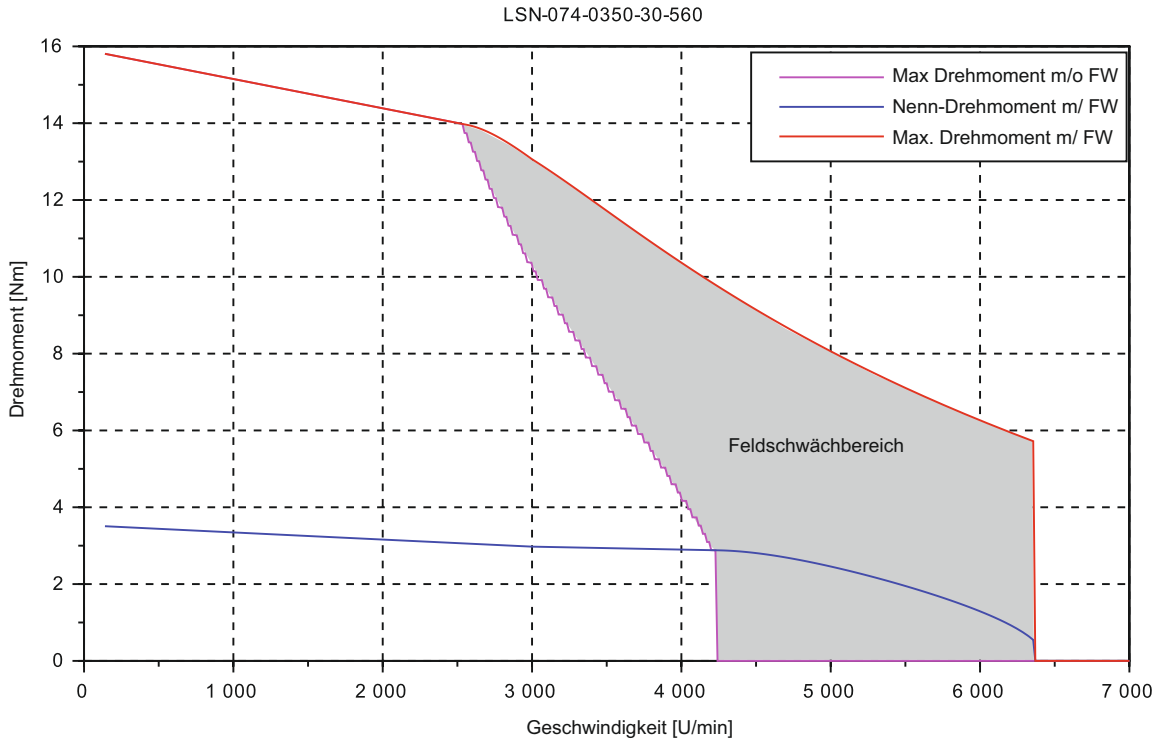

NOTE:

Operation in the field-weakening range is dependent on the drive controller used. The design of the drive for the field-weakening range requires special knowledge of drive design and controller configuration.
Talk to our technical support about this matter.

1.2.2 M-n characteristic for synchronous motors

Term	Explanation
n_N Rated speed	Speed at which a motor outputs the highest possible power (rated power) under full load.
M_0 Stall torque	Thermal limit torque of the motor at standstill. The motor can deliver this torque for an unlimited length of time.
I_0 Stall current	RMS value of the motor phase current required to generate the stall torque.
M_n Rated torque	Thermal limit torque of the motor at rated speed n_N.
I_N Rated current	RMS value of the motor phase current required to generate the rated torque.
P_N Rated power	Continuous motor power at the rated operating point (M_N, n_N) at rated current I_N and rated voltage U_N.
M_{MAX}, I_{MAX} Limit characteristic	A maximum of four times the rated current is allowed to be applied to the motors.

Table 1.2 Explanation of terms for M-n characteristic for synchronous motors

1.3 Properties of LSN/LST servomotors

Machine type	Permanently excited three-phase synchronous servomotor
Magnet material	Neodymium iron boron
Design (DIN 42948)	B5, V1, V3
Degree of protection (DIN 40050)	IP64, IP54 according to EN 60034-5 (rotating machinery), IP65 and IP67 available as an option
Insulation class	Insulation class F according to VDE0530, winding overtemperature Δt = 100 °C, ambient temperature t_U = -20 °C to +40 °C, no condensation!!!
Paint finish	RAL 9005 (matt black)
Shaft end on the D-end	Smooth shaft (feather key and feather keyway DIN 6885, tolerance band k6 as option)
Run-out, concentricity and axial run-out according to DIN 42955	Tolerance N (normal), tolerance R (reduced) upon request
Thermal motor monitoring	DIN PTC in a stator winding (standard), optional PT1000, thermal switch 140 °C
Torque load	To exclude thermal overload of the motor, the effective load torque at medium speed must not be above the S1 characteristic. 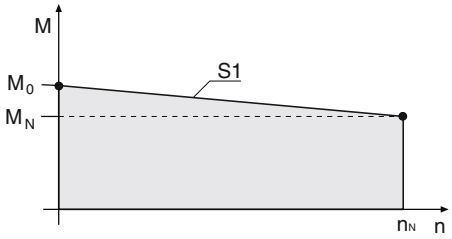 $M_{eff} = \sqrt{\frac{\Sigma (M^2_n \times t_n)}{t_{ges}}}$ $\bar{n} = \frac{\Sigma (n_n \times t_n)}{t_{ges}}$
Maximum pulse torque	Typically 2 to 4-times the rated torque for max. 0.2 s, depending on controller assignment
Vibration according to ISO 2373	Level N, optionally R
Bearing service life	The average service life under nominal conditions (Mmax ≤ MN) is 20,000 h
Type of connection of motor, thermistor and holding brake	Using connectors
Type of connection of the encoder system	Signal connector (mating connector not included in the scope of supply)
Degree of protection	IP64, optionally IP65
Electrical connections	Intercontec connectors (2 pieces)
Thermal motor protection	PTC, PT1000, thermal switch 140 °C
Rated data	According to EN 60034-1, T_A = 40 °C, T_{over} = 110 K, flange temperature ≤ 65 °C
Servoamplifier	Stator windings for DC link voltage U_{dc} = 320 V or 560 VDC
Flange/shaft	According to DIN 42955 N, optionally R

1.4 Cooling

The rated data stated relate to a max. ambient temperature of 40 °C and the attachment of the motor to an aluminium plate with a max. temperature of 65 °C and an installation altitude of max. 1000 m above MSL.
Minimum fastening area: 2.5 x area of the motor flange
Thickness of the fastening area: min. 10 mm
If the motor is mounted so it is insulated (no heat dissipation via the flange), the rated torque must be reduced. From an installation altitude > 1000 m above MSL a power reduction of 1% per 100 m is required. The maximum installation altitude is 4000 m.
At ambient temperatures > 40 °C a power reduction of 1% per 1 °C is required.
The maximum ambient temperature is 50 °C. For undefined cooling conditions (for example gearbox attachment) please consult our Applications department

1.5 Accuracies and system characteristics, encoder types, LSN/LST

NOTE:
Preferred types are motors or options that are available at short notice from stock. The wide range of variants means there are many possible combinations. The order options marked with a "*" are preferred types and are available with short delivery times.

Ordering options	Description	Interface	Singleturn resolution	Multiturn resolution	Number of sin/cos per revolution	LSN, compatible with	LST, compatible with
*1R	Resolver with 1 pole pair	Analogue	-	-	1	All LSN	All LST
1RY 1)	Resolver with 1 pole pair Safety	Analogue	-	-	1	All LSN	All LST
3R	Resolver with 3 pole pairs	Analogue	-	-	3	Only LSN-050	From LST-050
5R	Resolver with 5 pole pairs	Analogue	-	-	5	From LSN-074	n.a.
G3	Multiturn absolute value encoder EQN 1325	SSI and analogue	13 bits	12 bits	2048	From LSN-074	From LST-074
G5	Singleturn absolute value encoder ECN 1313	SSI and analogue	13 bits	-	2048	From LSN-074	From LST-074
G6.1S	Singleturn absolute value encoder SRS 50	Hiperface and analogue	15 bits	-	1024	From LSN-074	From LST-074
G6.1M	Multiturn absolute value encoder SRM 50	Hiperface and analogue	15 bits	12 bits	1024	From LSN-074	From LST-074
G6.2S	Singleturn absolute value encoder SKS 36	Hiperface and analogue	12 bits	-	128	All LSN	From LST-050
G6.2SY 1)	Singleturn absolute value encoder SKS 36 Safety	Hiperface and analogue	12 bits	-	128	All LSN	From LST-050
G6.2M	Multiturn absolute value encoder SKM 36	Hiperface and analogue	12 bits	12 bits	128	All LSN	From LST-050
G6.2MY 1)	Multiturn absolute value encoder SKM 36 Safety	Hiperface and analogue	12 bits	12 bits	128	All LSN	n.a.
G6.3S	Singleturn absolute value encoder SEK 37	Hiperface and analogue	9 bits	-	16	All LSN	n.a.
G6.3M	Multiturn absolute value encoder SEL 37	Hiperface and analogue	9 bits	12 bits	16	From LSN-074	n.a.
G7.1S	Singleturn absolute value encoder EFS 50	Hiperface DSL	21 bits	-	-	From LSN-074	From LST-074
G7.1SY 1)	Singleturn absolute value encoder EFS 50 Safety	Hiperface DSL	21 bits	-	-	From LSN-074	From LST-074
G7.2M	Multiturn absolute value encoder EKM 36	Hiperface DSL	18 bits	12 bits	-	All LSN	From LST-050
G7.2MY 1)	Multiturn absolute value encoder EKM 36 Safety	Hiperface DSL	18 bits	12 bits	-	All LSN	From LST-050
G7.3S	Singleturn absolute value encoder EES 37	Hiperface DSL	15 bits	-	-	All LSN	n.a.
G7.3M	Multiturn absolute value encoder EEM 37	Hiperface DSL	15 bits	12 bits	-	All LSN	n.a.
G12.1S	Singleturn absolute value encoder ECN 1313	Endat and analogue	13 bits	-	2048	From LSN-074	From LST-074
G12.1M	Multiturn absolute value encoder EQN 1325	Endat and analogue	13 bits	12 bits	2048	From LSN-074	From LST-074

Table 1.3 Encoder systems
1) Suitable for safety-related applications as per EN 62061 and IEC 61508 as well as EN ISO 13849-1
n.a. not available

Ordering options	Encoder property		System property [bits]					
			KeDrive D3				C-line-CDE	
	Typ. absolute accuracy[2]	Typ. absolute repetition accuracy[2]	Resolution f. speed control	Effective bits from AD conv.	Resolution f. speed control	Effective bits from AD conv.	Resolution f. speed control	Effective bits from AD conv.
*1R	± 10‘	± 1‘	16	14	14	12	12	10
1RY [1]	± 10‘	± 1‘	16	14	14	12	12	10
3R	± 5‘	± 1‘	17	14	15	12	13	10
5R	± 5‘	± 1‘	18	14	16	12	14	10
G3	± 20“	± 6“	24	11	24	11	2	9
G5	± 20“	± 6“	24	11	24	11	22	9
G6.1S	± 45“	± 7“	23	11	23	11	21	9
G6.1M	± 45“	± 7“	23	11	23	11	21	9
G6.2S	± 80“	± 40“	21	12	20	11	18	9
G6.2SY [1]	± 80“	± 40“	21	12	20	11	18	9
G6.2M	± 80“	± 40“	21	12	20	11	18	9
G6.2MY [1]	± 80“	± 40“	21	12	20	11	18	9
G6.3S	± 288“	± 144“	18	12	17	11	15	9
G6.3M	± 288“	± 144“	18	12	17	11	15	9
G7.2S	± 80“	± 40“	18	-	18	-	-	-
G7.2SY [1]	± 80“	± 40“	18	-	18	-	-	-
G7.2M	± 80“	± 40“	18	-	18	-	-	-
G7.2MY [1]	± 80“	± 40“	18	-	18	-	-	-
G7.3S	± 288‘	± 144“	15	-	15	-	-	-
G7.3M	± 288‘	± 144“	15	-	15	-	-	-
G12.1S	± 20“	± 6“	24	11	24	11	22	9
G12.1M	± 20“	± 6“	24	11	24	11	22	9

Table 1.4 Encoder and system characteristics

1) Suitable for safety-related applications as per EN 62061 and IEC 61508 as well as EN ISO 13849-1

2) Data as per encoder manufacturer

1.6 Declaration of conformity for LSN/LST servomotors

EU-Konformitätserklärung

EU Declaration of Conformity

KEBA
Automation by innovation.

Der Hersteller *The manufacturer*	KEBA Industrial Automation Germany GmbH Gewerbestraße 5-9 35633 Lahnau Deutschland

erklärt in alleiniger Verantwortung hiermit, dass die folgenden Produkte
declares under sole responsibility, that the following products

Produktbezeichnung: *Product designation:*	Synchron-Servomotor *Synchronous Servomotor*
Produkttypen: *Product types:*	LSN-XXX-XXXX-XX-XXX/B LST-XXX-XXXX-XX-XXX/B

X = 0-9
B = Freitext aus verschieden alphanumerischen Ziffern durch Komma angereiht, außer „E“
Free text of different alphanumeric digits separated by a comma, except "E"

den Sicherheitsbestimmungen der nachstehenden EU-Richtlinie entsprechen:
comply with the essential requirements of the following EU Directive:

2014/35/EU *2014/35/EU*	Niederspannungsrichtlinie *Low Voltage Directive*
2014/30/EU *2014/30/EU*	Elektromagnetische Verträglichkeit (EMV) *Electromagnetic Compatibility (EMC)*
2011/65/EU *2011/65/EU*	RoHS-Richtlinie inkl. der Delegierten Richtlinie 2015/863 *RoHS Directive incl. Delegated Directive 2015/863*

und dass folgende angeführte Normen angewandt wurden:
and that the following standards has been applied:

EN 60034-1:2010
Drehende elektrische Maschinen - Teil 1: Bemessung und Betriebsverhalten
Rotating electrical machines – Part 1: Rating and performance

EN 60034-5:2001+A1: 2007
Drehende elektrische Maschinen – Teil 5: Schutzarten aufgrund der Gesamtkonstruktion von drehenden elektrischen Maschinen (IP-Code) – Einteilung
Rotating electrical machines – Part 5: Degrees of protection provided by the integral design of rotating electrical machines (IP-Code)

EN 60034-6:1993:
Drehende elektrische Maschinen – Teil 6: Einteilung der Kühlverfahren (IC-Code)
Rotating electrical machines – Part 6: Methods of cooling (IC-Code

EN 60034-9:2005+A1:2007
Drehende elektrische Maschinen – Teil 9: Geräuschgrenzwerte
Rotating electrical machines – Part 9: Noise limits

EN 61000-6-4:2007 + A1:2011
Elektromagnetische Verträglichkeit - Fachgrundnorm Störaussendung - Teil 2: Industriebereich
Electromagnetic compatibility (EMC) – Part 6-4: Generic standards - Emission standard for industrial environments

Dokument: 0970.0DK.4-05

FB 0018 EU-Konformitätserklärung NSRL/EMV 2020/03 K

EU-Konformitätserklärung

EC Declaration of Conformity

KEBA
Automation by innovation.

EN 61000-6-2:2015
Elektromagnetische Verträglichkeit - Teil 6-2: Fachgrundnorm Störfestigkeit – Industriebereich
Electromagnetic compatibility (EMC) – Part 6-2: Generic standards - Immunity standard for industrial environments

Unterzeichnet für und im Namen von KEBA Industrial Automation Germany GmbH.
Signed for and on behalf of KEBA Industrial Automation Germany GmbH.

Unterschrift / *signature:*	i.V.	
Name / *name:*	Jonas Weigelt	Dr. Josef Wiesinger
Stellung / *position:*	Product Center Motoren *Product Center Motors*	Geschäftsführer *Managing Director*
Datum / *date:*	15.01.2022	15.01.2022
Ort / *place:*	Lahnau	Lahnau
Land / *country:*	Deutschland	Deutschland

Die deutschsprachige Version dieses Dokumentes ist die Originalversion, alle anderssprachigen Versionen wurden aus dem Original-Text übersetzt.
The German-language version of this document is the original version, all other language versions have been translated from the original text.

1.7 Properties of the motor types compared

The torque characteristics in the previous chapter and the properties in the table below provide valuable information that will help you choose the right motor. Your application will also determine which motor type is right for you. If you are unsure, contact us. We will be pleased to advise you.

Property	Servomotor	
	LSN	LST
Power density		
Dynamic performance		
Overload capacity		
Availability of special windings		
Suitable for low voltage windings		
Suitable for high stall torques		
Moment of inertia		
Suitable for high speeds		
Synchronism, cogging		
Price/performance ratio		
Range of encoder variants		
Range of size variants		
 ... Top	 ... Good	 ...Standard

Table 1.5 Properties and suitability of servomotors

1.8 Selection procedure

Basic information	To select the correct drive and motor, the specific speed and the load cycle for the drive task must be known.
Step 1	Specify the degree of protection: IP64, IP65
Step 2	Specify the supply voltage: 230 V to 400 V
Step 3	Specify the space envelope
Step 4	Specify the maximum torque from the load cycle profile or by dimensioning using Servosoft
Step 5	Specify the average (effective) torque
Step 6	Specify the motor type required: LSN/LST ...
Step 7	On the relevant data page, select the motor that meets the following criteria: synchronous servomotor: $n_{max} \leq 1.1 \cdot n_{rated}$ $M_{eff} \leq M_{rated}$
Step 8	Specify the encoder system required in relation to requirement: resolver, absolute value encoder, pulses per revolution.
Step 9	Complete motor designation with all necessary options (type code).
Step 10	Specify the servocontroller
Step 11	Specify the ready-made encoder and power cables
Step 12	Select the converter/servocontroller for the selected motor in the selection and ordering data based on the standard overload conditions. Select the converter/servocontroller to suit the related motor stall current and motor rated current.



2 The LSN servomotor – compact and low-cost

2.1 Applications

The synchronous servomotors from KEBA are brushless three-phase motors for high-end servo applications and are available in all speed and voltage variants. They are particularly suitable for positioning tasks on machine tools, industrial robots, transfer lines, etc., as well as for applications with high demands on dynamic performance and stability.
The standard models of our servomotors are equipped to handle a wide range of applications. In addition, available options include, e.g., a holding brake, degree of protection IP65, a very wide variety of temperature monitors, a model with flying lead, various encoders, as well as customer-specific flanges and special shafts. Optionally, we also offer our servomotors in EX (explosion-proof) variants.
Please contact our drive specialists for details.
The LSN product range with stall torques (M_0) from 0.28 Nm to 60 Nm (externally cooled up to 78 Nm).
The motors are available as preferred types for DC link voltages of 560 V, 320 V.
The winding is designed as a compound-die pole winding. An optimised thermal design has increased the power density. As such the power density and dynamic performance of the LSN servomotors are at the highest level.

2.2 Performance features of the LSN servomotors

- Very high power density and high dynamic performance
- Plug-in connections
- Good price/performance ratio
- Fully encapsulated winding
- UL acceptance
- Various encoders available as options

2.3 Order codes, KEBA synchronous motors in the LSN product range

NOTE:

Preferred types are motors or options that are available at short notice from stock. The wide range of variants means there are many possible combinations. **The order options marked with a "*" are preferred types and are available with short delivery times.**

						Options (if available, sequence varies)								
	LSN	- 074	- 0115	- 30	-320	/ T1	, B	, FL	, P	, X	, K	, S4	, W	, G6.1S
KEBA synchronous motor product range N														
Edge dimensions in mm (not flange dimensions)		050 074 097 127 158 190												
Stall torque			*0.28 Nm* →**0028** *0.54 Nm*→**0054** *0.75 Nm*→**0075** *0.95 Nm*→**0095** *1.15 Nm*→**0115** *2.05 Nm*→**0205** *3.50 Nm*→**0350** *4.80 Nm*→**0480** *5.10 Nm*→**0510** *7.50 Nm*→**0750** *9.60 Nm*→**0960**	*11.30 Nm*→**1130** *12.00 Nm*→**1200** *16.00 Nm*→**1600** *18.00 Nm*→**1800** *20.00 Nm*→**2000** *24.00 Nm*→**2400** *30.00 Nm*→**3000** *38.00 Nm*→**3800** *40.00 Nm*→**4000** *44.00 Nm*→**4400** *50.00 Nm*→**5000** *60.00 Nm* →**6000**										
Rated speed (x100) in min^{-1}				30 45										
Controller DC link voltage (VDC)					320 560									
Options Thermal protection						**DIN PTC in the encoder connector STANDARD** → ***T1E** **DIN PTC in the power connector STANDARD** → ***T1M** drillings DIN PTC in the encoder connector → **3T1E** drillings DIN PTC in the power connector → **3T1M** (Only for ongoing projects) KTY84-30 in the encoder connector → **T4E** (Only for ongoing projects) KTY84-30 in the power connector → **T4M** (Replacement type for KTY84-30) PT1000 in the encoder connector → **T15E** (Replacement type for KTY84-30) PT1000 in the power connector → **T15M**									
Brake option							**Holding brake 24 VDC** *B							
Preparation for external fan option (please order external fan separately)								**FI**						
Feather key option									**Feather key according to DIN 6885, sheet 1** *P					

Table 2.1 Order code LSN servomotors

			Options (if available, sequence varies)						
LSN - 074 - 0115 - 30 - 320 /			T1 ,	B ,	P ,	X ,	K ,	S4 ,	W ,	G6.1S
Customer-specific special design	(e.g. special flange / shaft / housing / encoder / etc.)	**X**								
Cable option	Cable, 1 m, flying leads	**K**								
Connection option (The D-end of the motor is the shaft end)	Angled connector, alignment toward D-end	**S1**								
	Angled connector, alignment toward N-end	**S2**								
	Angled connector, alignment rotated 90°	**S3**								
	Angled / rotating connector	***S4**								
	From size LSN-127, angled, rotating connector with raised body, rotation angle 270°	**S7**[1)]								
Options Shaft seal	**Degree of protection IP65 with shaft seal (approx. 10 mm longer)**	→ ***W**								
	Degree of protection IP65 without shaft seal	→ **V**								
Options Encoder system	**Resolver with 1 pole pair**	→ ***1R**								
	Resolver with 1 pole pair Safety	→ **1RY**								
	Resolver with 3 pole pairs	→ **3R**								
	Resolver with 5 pole pairs	→ **5R**								
	Multiturn absolute value encoder EQN 1325 SSI	→ **G3**								
	Singleturn absolute value encoder ECN 1313 SSI	→ **G5**								
	Singleturn absolute value encoder SRS 50	→ **G6.1S**								
	Multiturn absolute value encoder SRM 50	→ **G6.1M**								
	Singleturn absolute value encoder SKS 36	→ **G6.2S**								
	Singleturn absolute value encoder SKS 36 Safety	→ **G6.2SY**								
	Multiturn absolute value encoder SKM 36	→ **G6.2M**								
	Multiturn absolute value encoder SKM 36 Safety	→ **G6.2MY**								
	Singleturn absolute value encoder SEK 37	→ **G6.3S**								
	Multiturn absolute value encoder SEL 37	→ **G6.3M**								
	Hiperface DSL singleturn EKS 36 (18 bits)	→ **G7.2S**								
	Hiperface DSL multiturn EKM 36 (18/12 bits)	→ **G7.2M**								
	Hiperface DSL singleturn EKS 36 safety (18 bits)	→ **G7.2SY**								
	Hiperface DSL multiturn EKM 36 safety (18/12 bits)	→ **G7.2MY**								
	Hiperface DSL singleturn EES 37 (15 bits)	→ **G7.3S**								
	Hiperface DSL multiturn EEM 37 (15/12 bits)	→ **G7.3M**								
	Singleturn absolute value encoder ECN 1313 EnDat	→ **G12.1S**								
	Multiturn absolute value encoder EQN 1325 EnDat	→ **G12.1M**								

Table 2.2 Order codes, LSN servomotors

The order options marked with a "*" are preferred types and are available with short delivery times.

1) *For details see Figure 4.4 on page 114*

2.4 Features of the standard version

Definition of standard model	
• Smooth motor shaft (no feather key)	• Resolver connector straight
• Resolver with 1 pole pair 1R	• Power connector straight
• IP64 according to DIN 40050 except flange	• Double basic insulation (winding and PTC) Tx
• IP54 according to DIN VDE0530-5 and EN60034-5 (rotating machinery)	

2.5 Ordering example LSN servomotors:

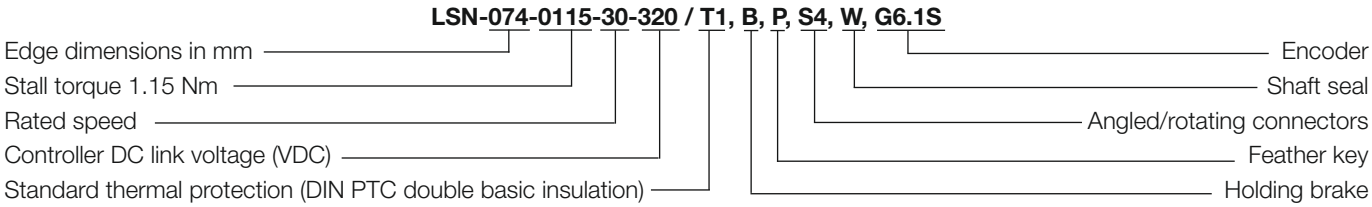

2.6 Ordering options

- Holding brake
- Various encoders
- Feather key DIN 6885
- Special shaft/flange
- Special mechanical design
- Servo gearboxes
- Flying lead
- Preparation for external fan
- ATEX acceptance
- etc.

Space for your notes

2.6.1 Radial and axial force, servomotor without brake

Sizes	Radial force F_{Rm} [N] at rated speed n [min^{-1}]					Axial force F_{Am} [N] at rated speed n [min^{-1}]					F_G
	1000	2000	3000	4500	6000	1000	2000	3000	4500	6000	[N]
LSN-050-0028	312	247	216	189	172	59	47	41	37	33	2
LSN-050-0054	338	268	234	205	186	64	51	45	39	35	2
LSN-050-0075	355	281	246	215	195	67	53	47	41	37	2
LSN-050-0095	366	291	254	222	201	70	55	48	42	38	2
LSN-074-0115	408	324	283	247	225	78	62	54	47	43	6
LSN-074-0205	472	374	327	286	260	90	71	62	54	49	6
LSN-074-0350	514	408	356	311	283	98	77	68	59	54	6
LSN-074-0480	566	449	392	343	311	108	85	75	65	59	6
LSN-097-0510	859	681	595	520	472	163	129	113	99	90	18
LSN-097-0750	942	748	653	571	519	179	142	124	108	99	18
LSN-097-0960	993	788	689	602	547	189	150	131	114	104	18
LSN-097-1130	1028	816	713	623	566	195	155	135	118	107	18
LSN-127-1200	959	761	665	581	528	182	145	126	110	100	34
LSN-127-1600	1029	817	713	623	566	196	155	136	118	108	34
LSN-127-2000	1076	854	746	652	592	204	162	142	124	113	34
LSN-127-2400	1110	881	770	672	611	211	167	146	128	116	34
LSN-158-1800	919	729	637	557	506	175	139	121	106	96	60
LSN-158-2400	986	782	684	597	543	187	149	130	113	103	60
LSN-158-3000	1034	820	717	626	569	196	156	136	119	108	60
LSN-158-3800	1069	849	741	648	588	203	161	141	123	112	60
LSN-158-4400	1097	871	761	664	604	208	165	145	126	115	60
LSN-190-3000	1752	1390	1214	1061	964	333	264	231	202	183	100
LSN-190-4000	1862	1478	1291	1128	1025	354	281	245	214	195	100
LSN-190-5000	1942	1541	1346	1176	1069	369	293	256	223	203	100
LSN-190-6000	2001	1588	1388	1212	1101	380	302	264	230	209	100

Table 2.3 Permissible axial and lateral forces on the LSN servomotors up to a service life of 20,000 h.
F_G ... force due to weight of the rotor.

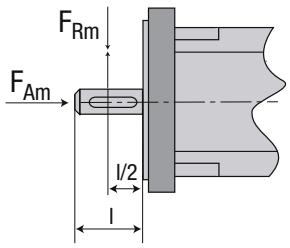

The table shows the max. permissible lateral force (radial force F_R) at the point of application l/2 and the max. permissible axial force F_{Am} for a service life of 20,000 h. A lateral force that does not act on the middle of the end of the shaft can be simply converted to the different leverage.
Either the permissible radial force or the axial force is allowed to act on the motor shaft!

2.6.2 Radial and axial force, servomotor with brake

Sizes	Radial force F_{Rm} [N] at rated speed n [min^{-1}]					Axial force F_{Am} [N] at rated speed n [min^{-1}]					F_G
	1000	2000	3000	4500	6000	1000	2000	3000	4500	6000	[N]
LSN-050-0028	356	283	247	216	196	68	54	47	41	37	2
LSN-050-0054	367	291	254	222	202	70	55	48	42	38	2
LSN-050-0075	374	297	260	227	206	71	56	49	43	39	2
LSN-050-0095	380	302	264	230	209	72	57	50	44	40	2

Table 2.4 Permissible axial and lateral forces on the LSN servomotors up to a service life of 20,000 h.
F_G ... force due to weight of the rotor.

Sizes	Radial force F_{Rm} [N] at rated speed n [min^{-1}]					Axial force F_{Am} [N] at rated speed n [min^{-1}]					F_G
	1000	2000	3000	4500	6000	1000	2000	3000	4500	6000	[N]
LSN-074-0115	431	342	299	261	237	82	65	57	50	45	6
LSN-074-0205	484	384	335	293	266	92	73	64	56	51	6
LSN-074-0350	520	413	360	315	286	99	78	68	60	54	6
LSN-074-0480	567	450	393	343	312	108	86	75	65	59	6
LSN-097-0510	881	699	611	534	485	167	133	116	101	92	18
LSN-097-0750	951	755	660	576	524	181	143	125	109	99	18
LSN-097-0960	997	791	691	604	548	189	150	131	115	104	18
LSN-097-1130	1028	816	713	623	566	195	155	135	118	108	18
LSN-127-1200	982	779	681	595	540	187	148	129	113	103	34
LSN-127-1600	1044	829	724	632	575	198	157	138	120	109	34
LSN-127-2000	1087	863	754	658	598	207	164	143	125	114	34
LSN-127-2400	1118	888	775	677	615	212	169	147	129	117	34
LSN-158-1800	1008	800	699	610	555	191	152	133	116	105	60
LSN-158-2400	1035	822	718	627	570	197	156	136	119	108	60
LSN-158-3000	1057	839	733	640	582	201	159	139	122	111	60
LSN-158-3800	1075	853	745	651	591	204	162	142	124	112	60
LSN-158-4400	1089	864	755	660	599	207	164	143	125	114	60
LSN-190-3000	1936	1537	1342	1173	1065	368	292	255	223	202	100
LSN-190-4000	1997	1585	1384	1209	1099	379	301	263	230	209	100
LSN-190-5000	2044	1622	1417	1238	1125	388	308	269	235	214	100
LSN-190-6000	2082	1652	1443	1261	1146	396	314	274	240	218	100

Table 2.4 Permissible axial and lateral forces on the LSN servomotors up to a service life of 20,000 h.
F_G ... force due to weight of the rotor.

2.6.3 Technical data, design

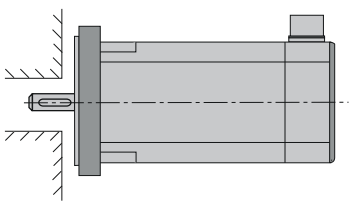

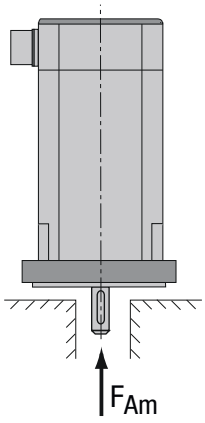

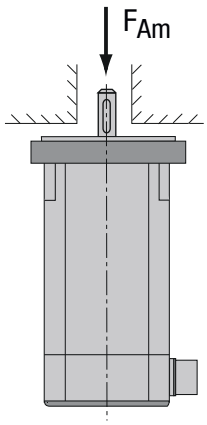

Design	B5/B14	V1	V3
Shaft	Open end of the shaft	Open end of the shaft at bottom	Open end of the shaft at top
Fastening	Flange mounting Access from the housing side	Flange mounting at bottom Access from the housing side	Flange mounting at top Access from the housing side

NOTE:
The permissible axial forces (F_A) apply for vertical mounting (V1). If mounted vertically upwards (V3) the permissible axial forces are reduced by the force due to the weight of the rotor (F_G).

2.7 Overview of LSN servomotors



2.7.1 Technical data

Motor type	Motor type/ rating plate	DC link voltage U_{dc} [V]	Stall torque M_0 [Nm]	Rated torque M_n [Nm]	Rated current I_n [A]	Rated speed n_n [min^{-1}]
LSN-050	LSN-050-0028-45-320	320	0.28	0.25	0.96	4500
	LSN-050-0054-45-320		0.54	0.48	1.12	4500
	LSN-050-0075-45-320		0.75	0.68	1.48	4500
	LSN-050-0095-45-320		0.95	0.85	1.70	4500
	LSN-050-0028-45-560	560	0.28	0.25	0.96	4500
	LSN-050-0054-45-560		0.54	0.48	0.90	4500
	LSN-050-0075-45-560		0.75	0.68	0.83	4500
	LSN-050-0095-45-560		0.95	0.85	1.07	4500
LSN-074	LSN-074-0115-30-320	320	1.15	1.13	2.30	3000
	LSN-074-0205-30-320		2.05	1.90	3.10	3000
	LSN-074-0350-30-320		3.50	3.00	4.30	3000
	LSN-074-0480-30-320		4.80	3.70	4.50	3000
	LSN-074-0115-30-560	560	1.15	1.13	1.30	3000
	LSN-074-0205-30-560		2.05	1.90	1.70	3000
	LSN-074-0350-30-560		3.50	3.00	2.40	3000
	LSN-074-0480-30-560		4.80	3.70	2.60	3000

Table 2.5 Technical data for the LSN servomotor product range - All figures with a tolerance of ± 5%

Motor type	Motor type/ rating plate	DC link voltage U_{dc} [V]	Stall torque M_0 [Nm]	Rated torque M_n [Nm]	Rated current I_n [A]	Rated speed n_n [min^{-1}]
LSN-097	LSN-097-0510-30-320	320	5.10	4.20	7.00	3000
	LSN-097-0750-30-320		7.50	6.10	8.80	3000
	LSN-097-0960-30-320		9.60	7.70	10.80	3000
	LSN-097-1130-30-320		11.30	8.80	10.70	3000
	LSN-097-0510-30-560	560	5.10	4.20	3.90	3000
	LSN-097-0750-30-560		7.50	6.10	5.10	3000
	LSN-097-0960-30-560		9.60	7.70	6.00	3000
	LSN-097-1130-30-560		11.30	8.80	6.90	3000
LSN-127	LSN-127-1200-30-560	560	12.00	10.50	8.30	3000
	LSN-127-1600-30-560		16.00	13.80	9.90	3000
	LSN-127-2000-30-560		20.00	16.00	11.50	3000
	LSN-127-2400-30-560		24.00	20.00	14.10	3000
LSN-158	LSN-158-1800-20-560	560	18.00	14.80	8.60	2000
	LSN-158-2400-20-560		24.00	20.00	10.70	2000
	LSN-158-3000-20-560		30.00	25.30	12.90	2000
	LSN-158-3800-20-560		38.00	29.00	15.00	2000
	LSN-158-4400-20-560		44.00	36.50	17.30	2000
	LSN-158-1800-30-560	560	18.00	13.00	11.00	3000
	LSN-158-2400-30-560		24.00	17.00	13.80	3000
	LSN-158-3000-30-560		30.00	21.00	16.20	3000
	LSN-158-3800-30-560		38.00	25.00	19.70	3000
	LSN-158-4400-30-560		44.00	30.00	24.40	3000
LSN-190	LSN-190-3000-20-560	560	30.00	26.10	13.20	2000
	LSN-190-4000-20-560		40.00	32.80	15.40	2000
	LSN-190-5000-20-560		50.00	40.40	21.80	2000
	LSN-190-6000-10-560		60.00	54.00	14.60	1000
	LSN-190-3000-30-560	560	30.00	23.00	15.50	3000
	LSN-190-4000-30-560		40.00	25.00	20.10	3000
	LSN-190-5000-30-560		50.00	30.00	24.40	3000
	LSN-190-6000-25-560		60.00	36.20	20.70	2500

Table 2.5 Technical data for the LSN servomotor product range - All figures with a tolerance of ± 5%

2.8 Technical data LSN-050 (U_{dc} = 320 + 560 VDC)



LSN-050-0028
-0054
-0075
-0095

Technical data[1]	Symbol	Unit	LSN-050-0028	LSN-050-0054	LSN-050-0075	LSN-050-0095
Rated speed	n_n	min^{-1}	4500			
Rated frequency	f_N	Hz	225			
DC link voltage (controller)	U_{dc}	V	320 / 560			
Rated voltage	U_n	V	114 / 118	166 / 207	167 / 301	172 / 274
Rated torque	M_n	Nm	0.25	0.48	0.68	0.85
Rated current	I_n	A	0.96 / 0.96	1.12 / 0.90	1.48 / 0.83	1.70 / 1.07
Power	P	kW	0.12	0.23	0.32	0.40
Stall torque	M_0	Nm	0.28	0.54	0.75	0.95
Stall current	I_0	A	0.97	1.17 / 0.93	1.54/ 0.86	1.82 / 1.15
Maximum permissible torque	M_{max}	Nm	1.1	2.2	3.0	3.8
Maximum permissible current	I_{max}	A	4.5	5.4 / 4.3	7.1 / 3.9	8.4 / 5.3
Maximum permissible speed	n_{max}	min^{-1}	12000			
EMF constant	K_E	V/1000 min^{-1}	17.5	28.0 / 35.5	29.5 / 53	31.5 / 50
Torque constant	K_T	Nm/A	0.29	0.46 / 0.58	0.49 / 0.88	0.52 / 0.83
Winding resistance (2 phases)	R_{2ph}	Ω	28.30	25.90 / 41.10	17.00 / 54.00	13.10 / 33.60
Winding inductance (2 phases)	L_{2ph}	mH	28.40	32.30 / 51.00	22.70 / 72.00	19.00 / 48.50
No load speed	n_0	min^{-1}	12000 / 12000 [2]	7740 / 10710	7380 / 7100	6950 / 7560
Electrical time constant	T_{el}	ms	1.0	1.2	1.3	1.45
Thermal time constant	T_{th}	min	10	12	15	18
Moment of inertia of rotor	J	$kgcm^2$	0.05	0.07	0.09	0.11
Mass	m	kg	0.76	0.93	1.1	1.27
Brake (optional)						
Rated voltage	U_N	V	24 ± 10%			
Rated current at 20 °C for releasing	I_N	A	0.46			
Permissible maximum speed	n_{max}	min^{-1}	10,000			
Permissible friction work	W_R	Ws	0.41×10^6			
Moment of inertia	J_B	$kgcm^2$	0.068			
Mass	m	kg	0.44			
Braking torque	M_H	Nm	2.00			

1) All figures with a tolerance of ± 10%. Other windings/rated speeds possible. Subject to technical change without notice.

2) Limited by the max. permissible speed of the motor

2.8.1 Dimensional sketch LSN-050

Rotary encoder option	Length [mm]	LSN-050-0028	LSN-050-0054	LSN-050-0075	LSN-050-0095
1R/3R	L (L + brake)	67 (105)	82 (120)	97 (135)	112 (150)
G6.2x + G7.2x	L (L + brake)	94 (128)	109 (143)	124 (158)	139 (173)
G6.3x	L (L + brake)	82 (127.5)	97 (142.5)	112 (157.5)	127 (172.5)
G7.3x	L (L + brake)	90 (127.5)	105 (142.5)	120 (157.5)	135 (172.5)

Table 2.6 Overview of the motor lengths – for overview of the encoder types see chapter 5.1; all data in [mm]

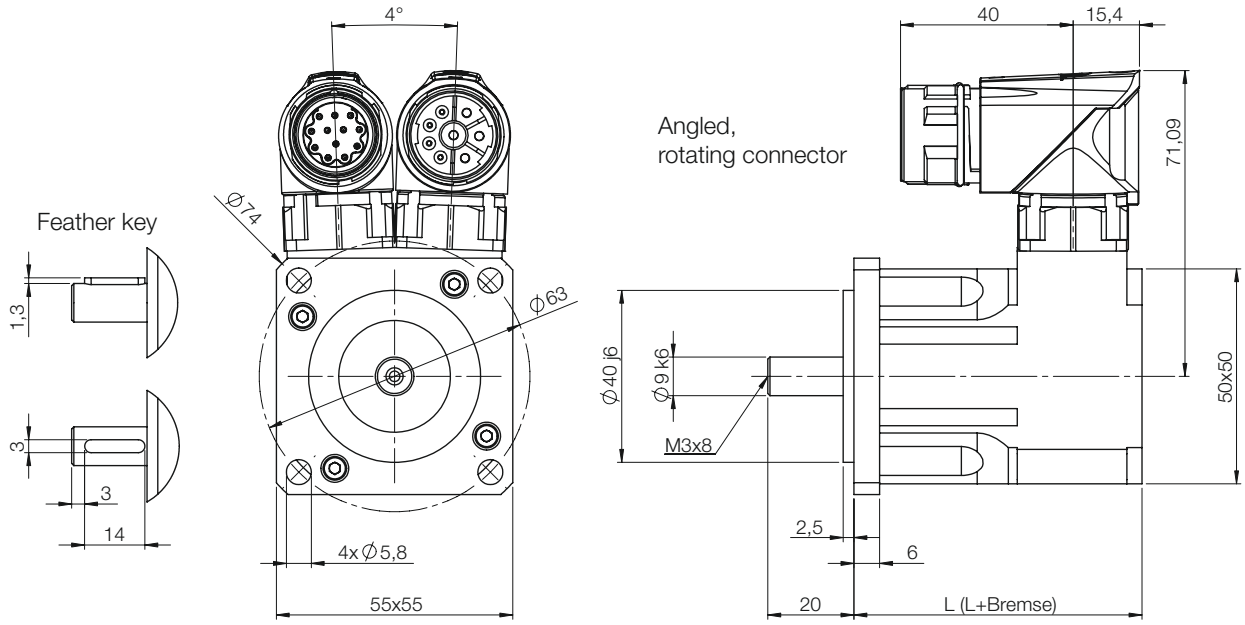

2.8.2 Characteristics LSN-050

Explanation of the characteristics:

The characteristic M_{max} describes the maximum torque possible for a short time at the related speed. It is important for dynamic processes.
The characteristic M_n shows the thermally permissible rated torque.
The characteristics are limited by the related maximum permissible speed n_{max} (for n_{max} see the table "Technical data").

LSN-050-0028-45-320

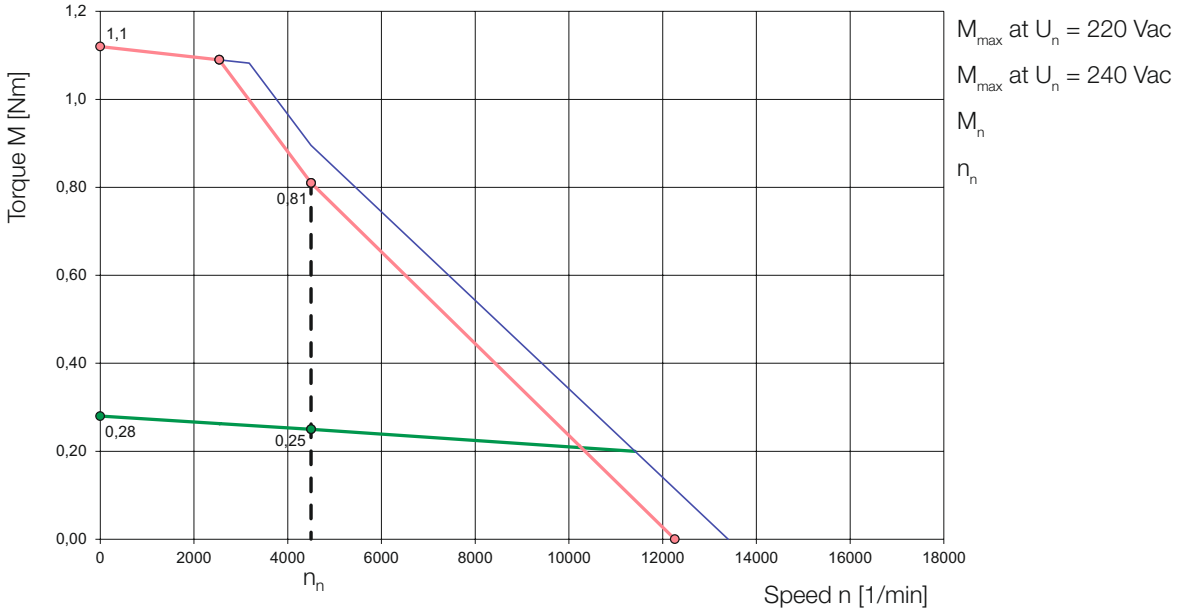

LSN-050-0054-45-320

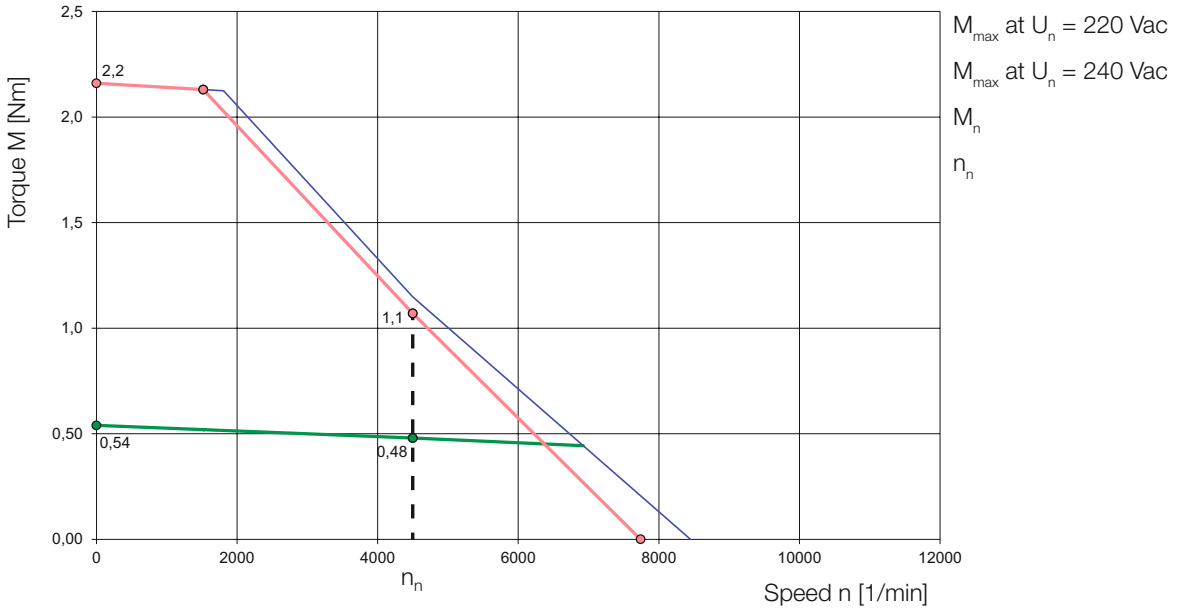

LSN-050-0075-45-320

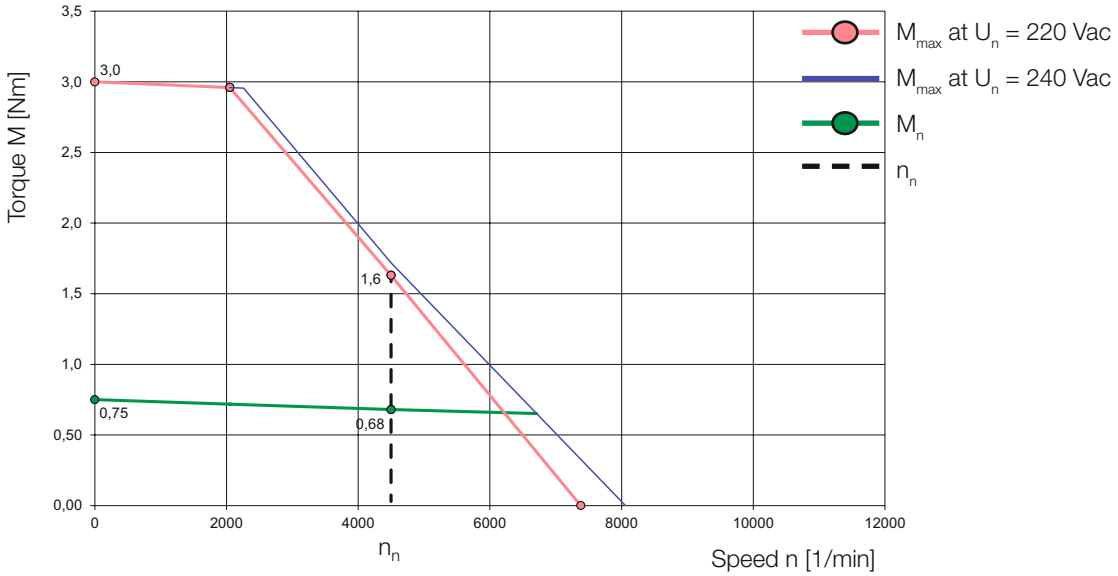

LSN-050-0095-45-320

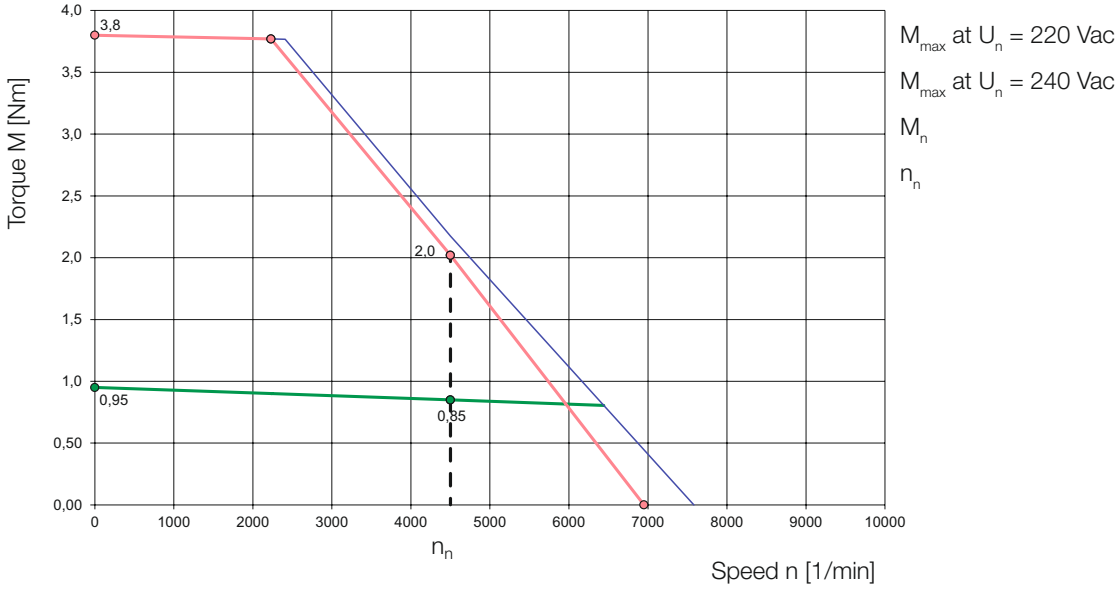

LSN-050-0028-45-560

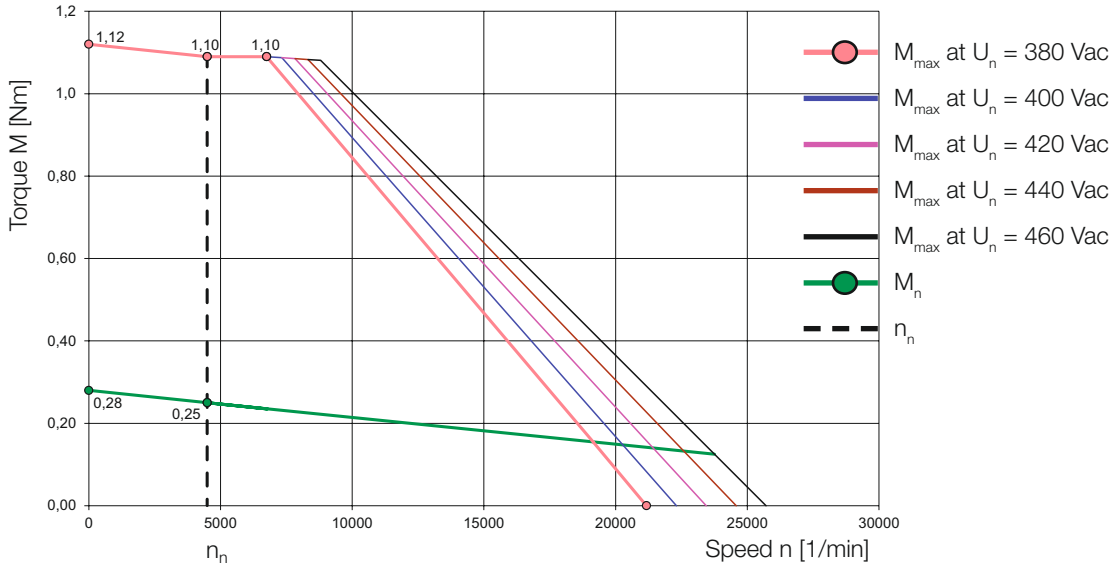

LSN-050-0054-45-560

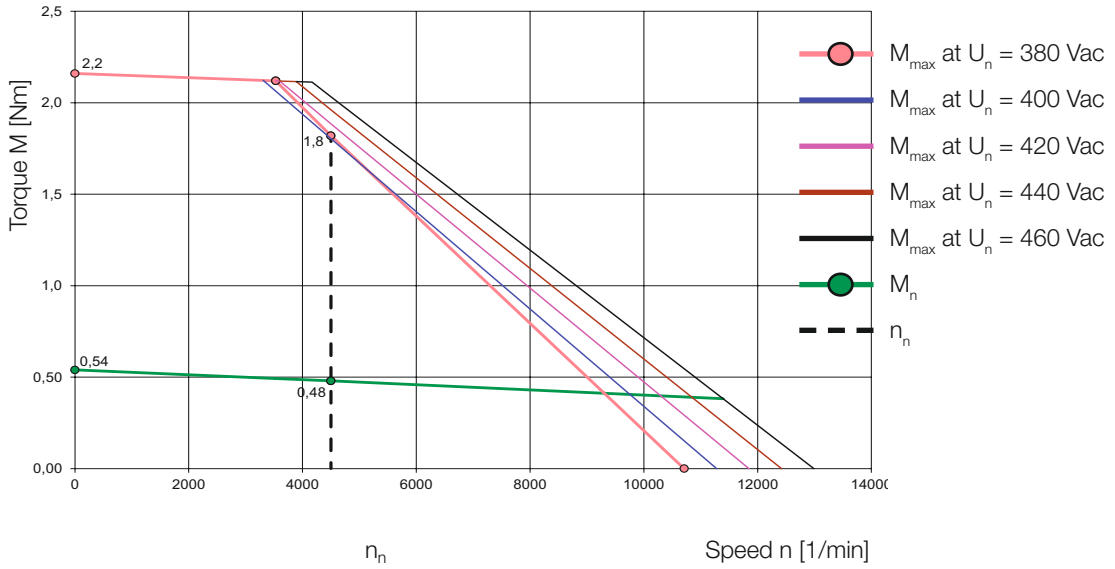

LSN-050-0075-45-560

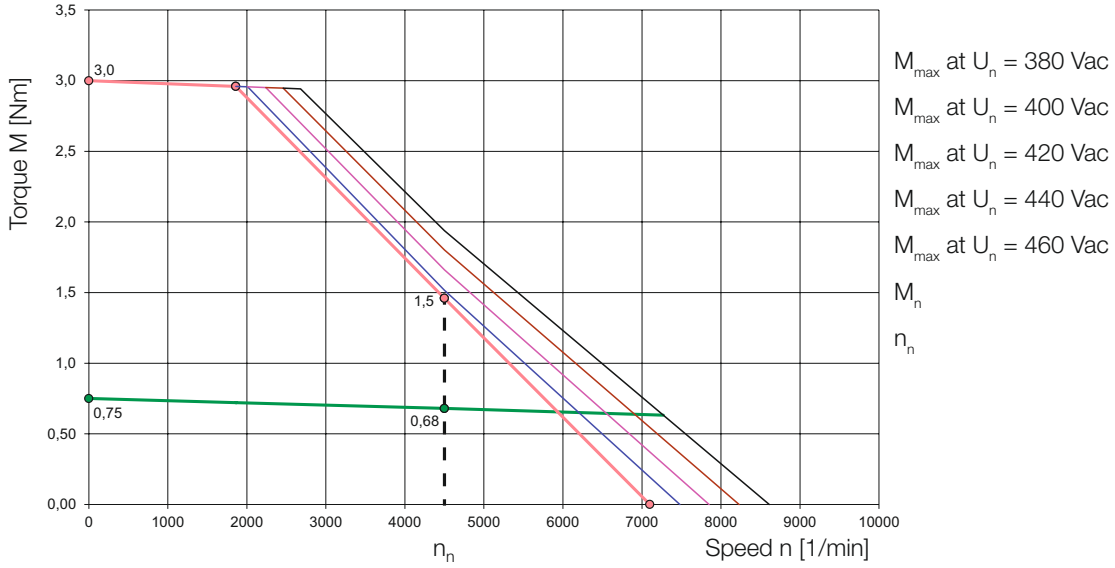

LSN-050-0095-45-560

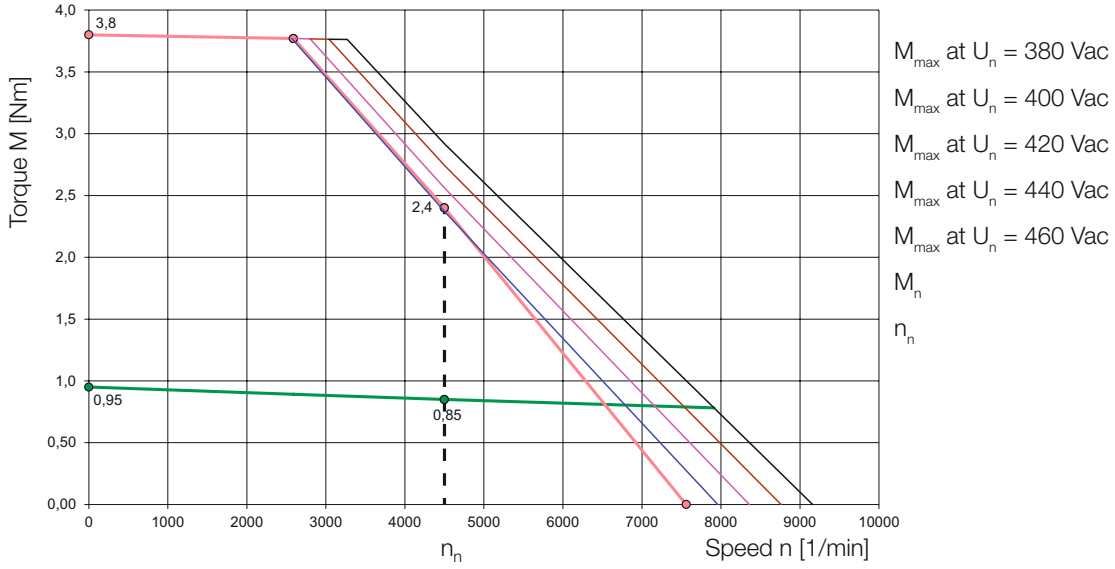

2.9 Technical data LSN-074 (U_{dc} = 320 + 560 VDC)



LSN-050-0115
-0205
-0350
-0480

Technical data[1]	Symbol	Unit	LSN-074-0115	LSN-074-0205	LSN-074-0350	LSN-074-0480
Rated speed	n_n	min^{-1}	3000			
Rated frequency	f_N	Hz	250			
DC link voltage (controller)	U_{dc}	V	320 / 560			
Rated voltage	U_n	V	136 / 248	153 /273	156 / 278	180 / 310
Rated torque	M_n	Nm	1.13	1.90	3.00	3.70
Rated current	I_n	A	2.30 / 1.30	3.10 / 1.70	4.30 / 2.40	4.50 /2.60
Power	P	kW	0.36	0.60	0.94	1.16
Stall torque	M_0	Nm	1.15	2.05	3.50	4.80
Stall current	I_0	A	2.00 /1.10	2.80 / 1.60	4.20 / 2.40	4.80 / 2.80
Maximum permissible torque	M_{max}	Nm	3.50	6.20	10.50	14.40
Maximum permissible current	I_{max}	A	9.2 / 5.0	12.7 / 7.2	19.4 / 10.9	17.3 / 10.1
Maximum permissible speed	n_{max}	min^{-1}	12000			
EMF constant	K_E	V/1000 min^{-1}	34.5 / 63.0	44.5 / 79.0	50.0 /89.0	60.0 /103.0
Torque constant	K_T	Nm/A	0.57 / 1.04	0.74 / 1.31	0.83 / 1.47	0.99 / 1.70
Winding resistance (2 phases)	R_{2ph}	Ω	8.40 / 27.80	5.40 / 17.30	2.80 / 8.90	2.50 / 7.50
Winding inductance (2 phases)	L_{2ph}	mH	18.0 / 59.3	13.3 / 42.4	8.1 / 25.5	7.5 / 22.7
No load speed	n_0	min^{-1}	6320 / 5980	4920 / 4790	4390 / 4260	3660 / 3680
Electrical time constant	T_{el}	ms	2.1	2.5	2.9	3.0
Thermal time constant	T_{th}	min	21	23	27	30
Moment of inertia of rotor	J	$kgcm^2$	0.31	0.55	1.04	1.52
Mass	m	kg	1.50	2.00	2.90	3.80
Brake (optional)						
Rated voltage	U_N	V	24 ± 10%			
Rated current at 20 °C for releasing	I_N	A	0.50			
Permissible maximum speed	n_{max}	min^{-1}	10,000			
Permissible friction work	W_R	Ws	0.58×10^6			
Moment of inertia	J_B	$kgcm^2$	0.18			
Mass	m	kg	0.5			
Braking torque	M_H	Nm	4.50			

1) All figures with a tolerance of ± 10%. Other windings/rated speeds possible. Subject to technical change without notice.

2.9.1 Dimensional sketch LSN-074

Rotary encoder option	Length [mm]	LSN-074-0115	LSN-074-0205	LSN-074-0350	LSN-074-0480
1R/3R	L (L + brake)	82 (120)	100 (138)	136 (174)	172 (210)
G3 + G5	L (L + brake)	123 (165.5)	141 (183.5)	177 (219.5)	213 (255.5)
G6.1x	L (L + brake)	101.5 (148)	119.5 (166)	155.5 (202)	191.5 (238)
G6.2x + G7.2x	L (L + brake)	99 (144)	117 (162)	153 (198)	189 (234)
G6.3x	L (L + brake)	82 (132)	100 (150)	136 (186)	172 (222)
G7.3x	L (L + brake)	96 (142)	114 (160)	150 (196)	186 (232)
G12.1x	L (L + brake)	123 (165.5)	141 (183.5)	177 (219.5)	213 (255.5)

Table 2.7 Overview of the motor lengths – for overview of the encoder types see chapter 5.1; all data in [mm]

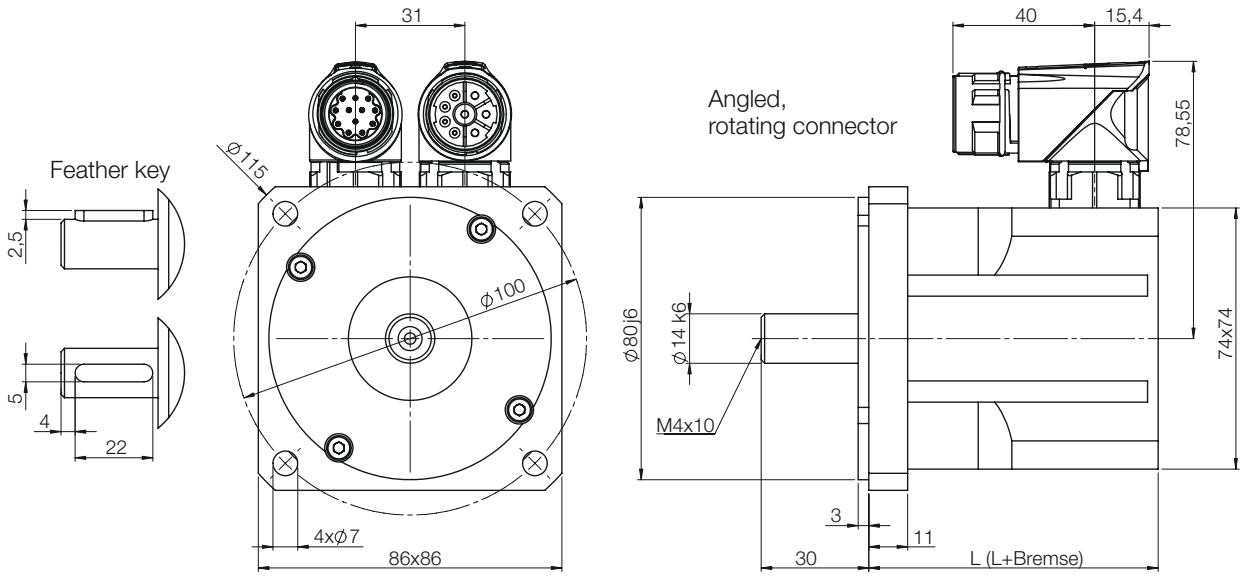

2.9.2 Characteristics LSN-074

Explanation of the characteristics:

The characteristic M_{max} describes the maximum torque possible for a short time at the related speed. It is important for dynamic processes.
The characteristic M_n shows the thermally permissible rated torque.
The characteristics are limited by the related maximum permissible speed n_{max} (for n_{max} see the table "Technical data").

LSN-074-0115-30-320

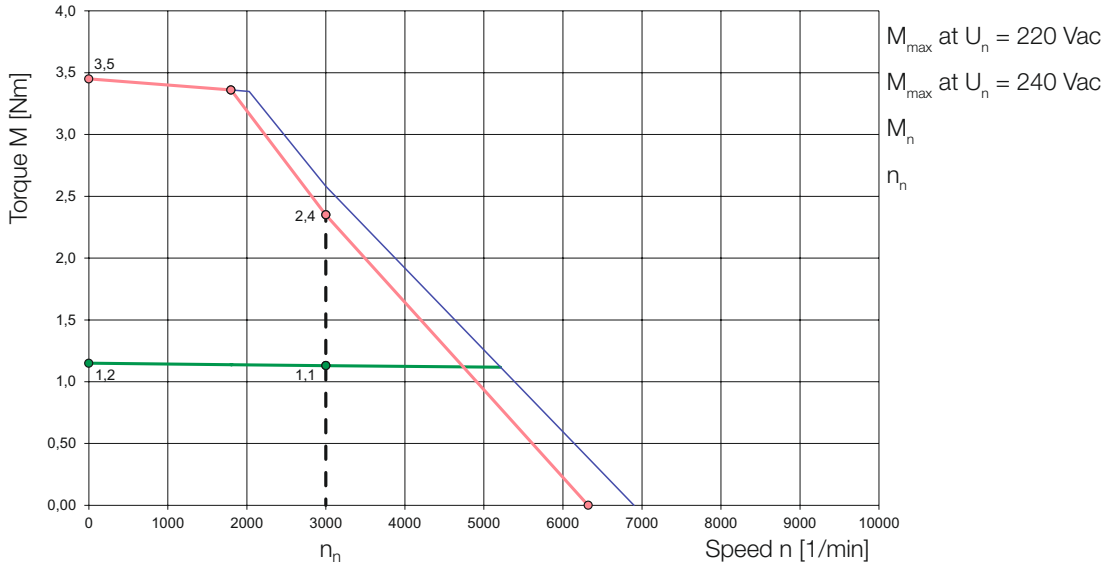

LSN-074-0205-30-320

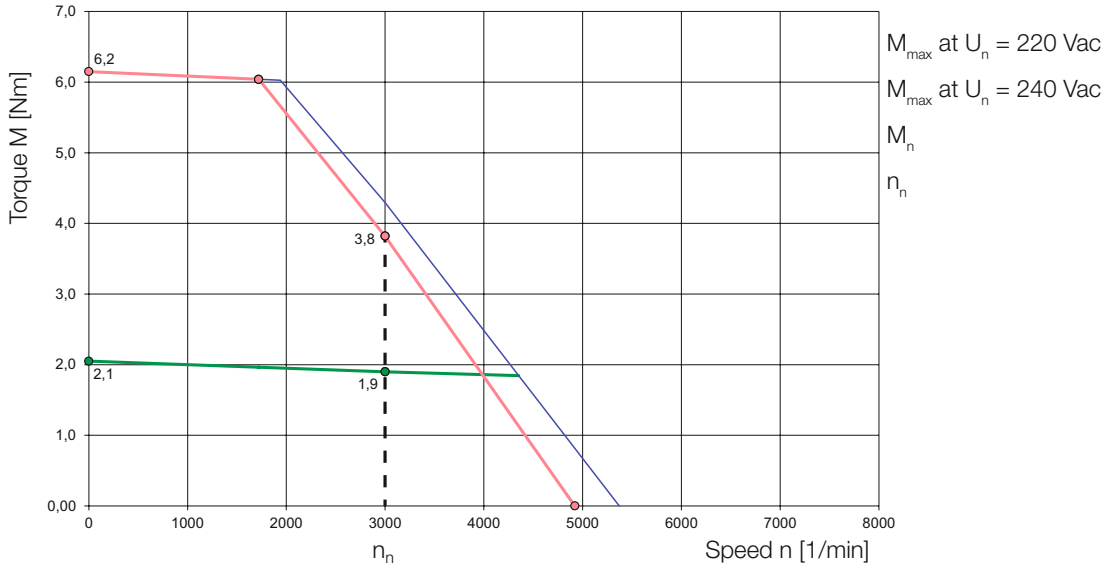

LSN-074-0350-30-320

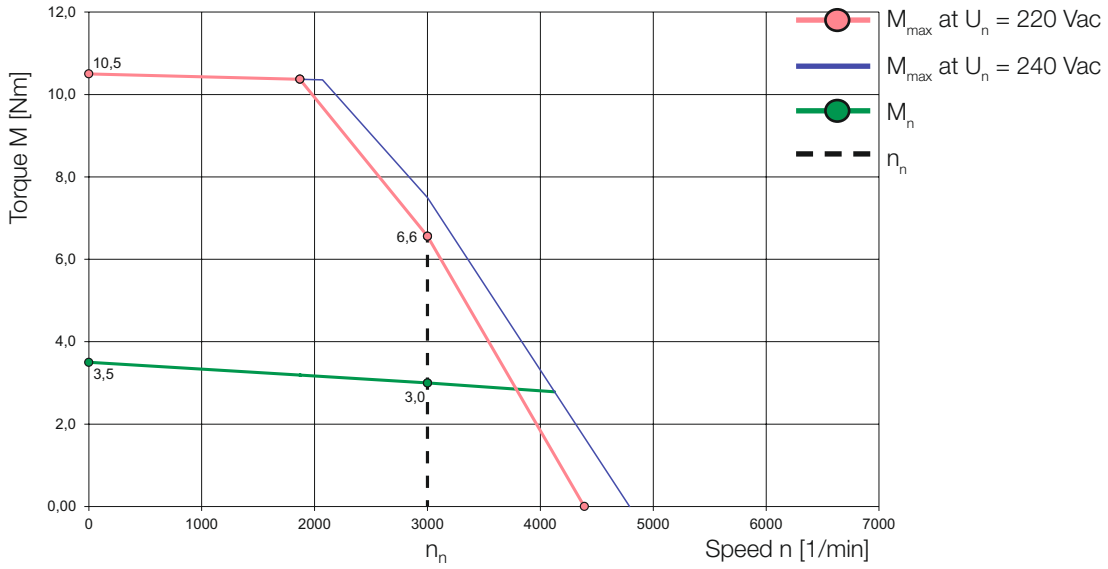

LSN-074-0480-30-320

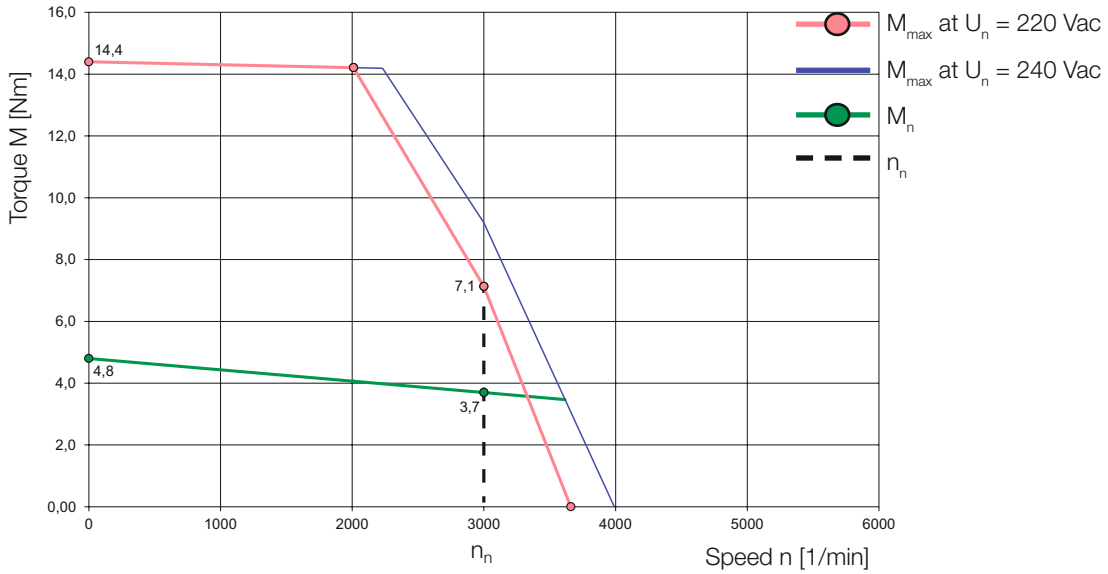

LSN-074-0115-30-560

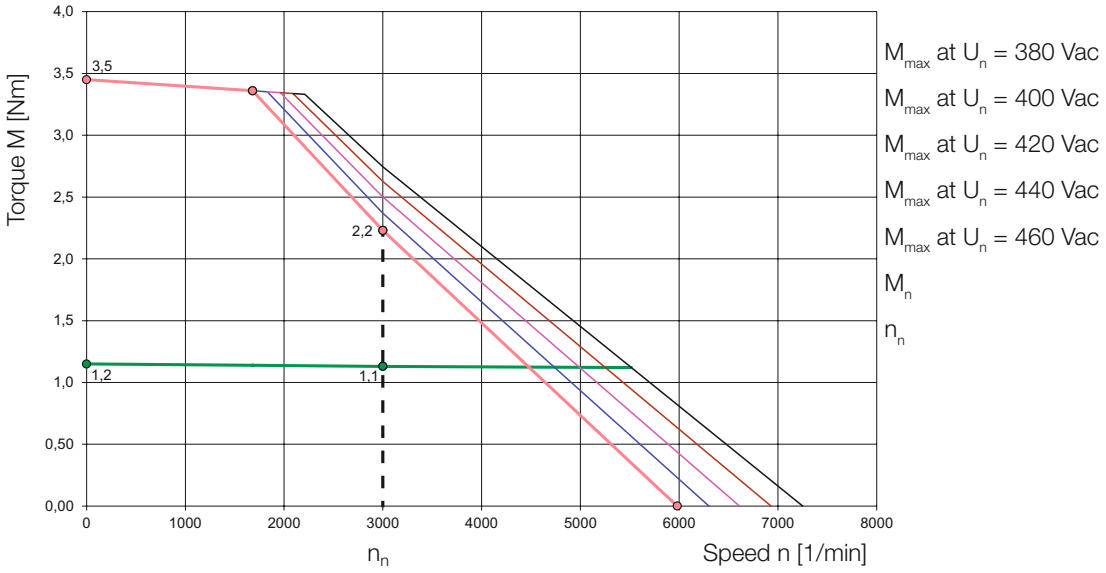

LSN-074-0205-30-560

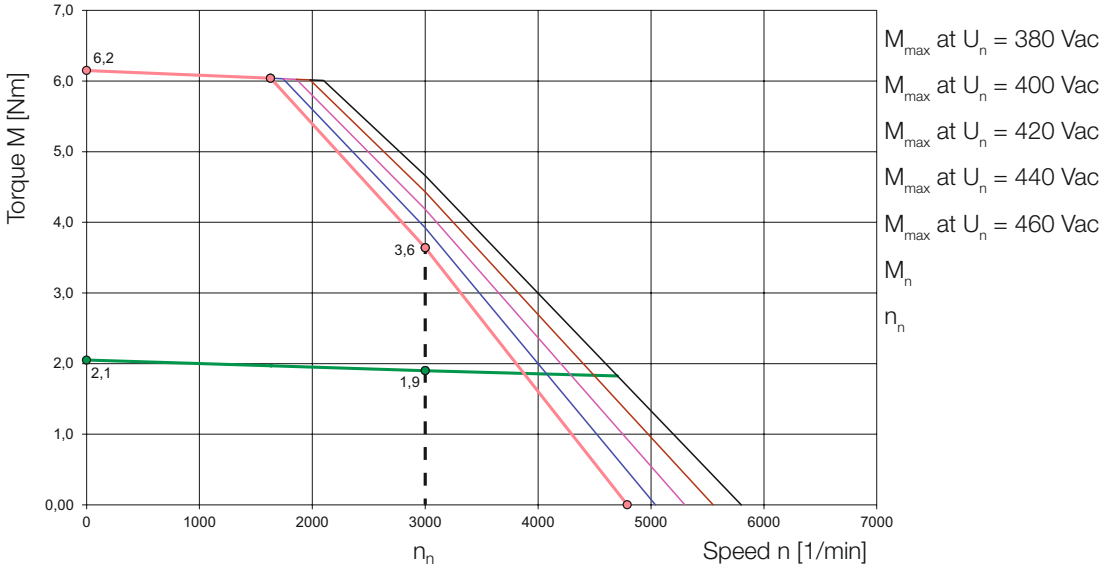

LSN-074-0350-30-560

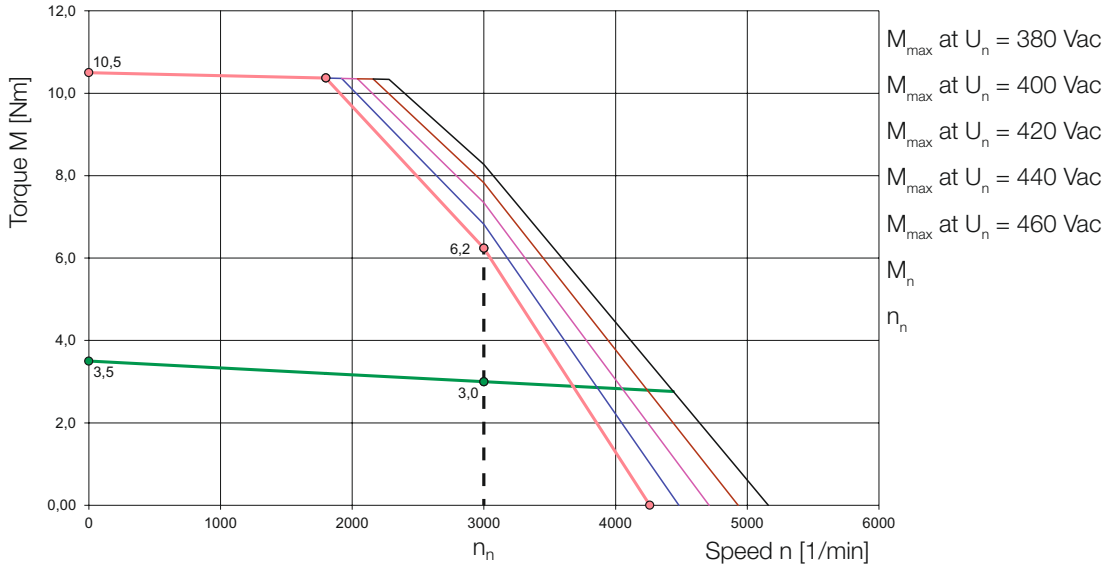

LSN-074-0480-30-560

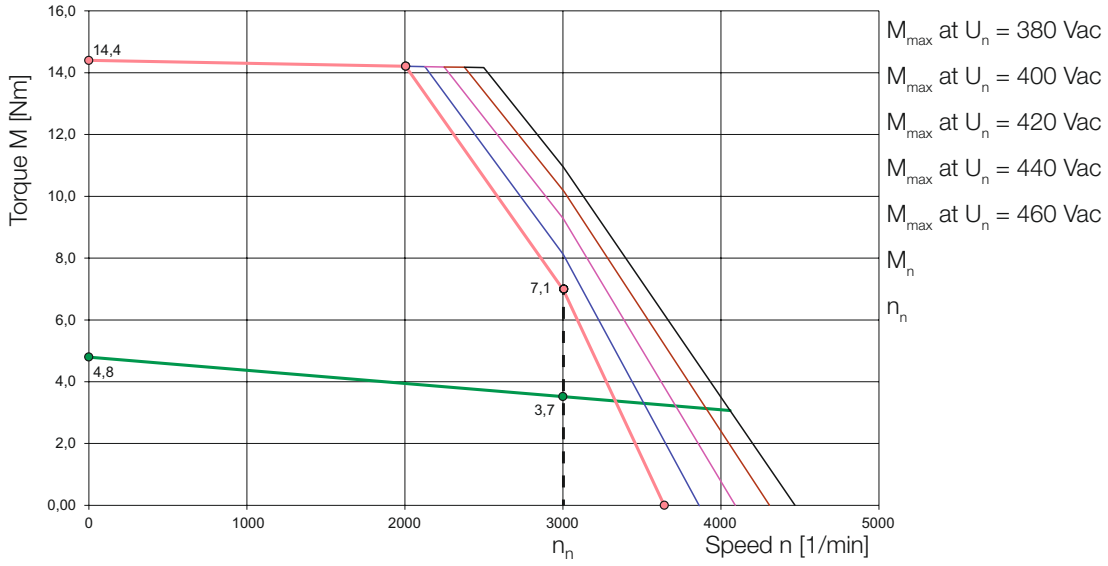

2.10 Technical data LSN-097 (U_{dc} = 320 + 560 VDC)



LSN-097-0510
-0750
-0960
-1130

Technical data[1)]	Symbol	Unit	LSN-097-0510	LSN-097-0750	LSN-097-0960	LSN-097-1130
Rated speed	n_n	min^{-1}	3000			
Rated frequency	f_N	Hz	250			
DC link voltage (controller)	U_{dc}	V	320 / 560			
Rated voltage	U_n	V	155 / 276	162 / 277	161 / 289	172 / 266
Rated torque	M_n	Nm	4.20	6.10	7.70	8.80
Rated current	I_n	A	7.00 / 3.90	8.80 / 5.10	10.80 / 6.00	10.70 / 6.90
Power	P	kW	1.32	1.92	2.42	2.76
Stall torque	M_0	Nm	5.10	7.50	9.60	11.30
Stall current	I_0	A	6.8 / 3.8	8.9 / 5.2	10.7 / 6.0	11.0 / 7.1
Maximum permissible torque	M_{max}	Nm	15.3	22.5	28.8	34.0
Maximum permissible current	I_{max}	A	31.0 / 17.4	40.7 / 23.8	49.2 / 27.4	41.0 / 27.0
Maximum permissible speed	n_{max}	min^{-1}	9000	9000	9000	9000
EMF constant	K_E	V/1000 min^{-1}	45.5 / 81.0	51.0 / 87.0	54.0 / 97.0	62.0 / 96.0
Torque constant	K_T	Nm/A	0.75 / 1.34	0.84 / 1.44	0.89 / 1.60	1.03 / 1.59
Winding resistance (2 phases)	R_{2ph}	Ω	1.24 / 4.00	0.79 / 2.29	0.62 / 2.00	0.61 / 1.49
Winding inductance (2 phases)	L_{2ph}	mH	6.8 / 21.7	4.8 / 13.5	3.6 / 11.9	3.8 / 9.1
No load speed	n_0	min^{-1}	4800 / 4650	4300 / 4350	4060 / 3910	3540 / 3950
Electrical time constant	T_{el}	ms	5.5	6.1 / 5.9	5.8 / 6.0	6.2 / 6.1
Thermal time constant	T_{th}	min	25	30	35	40
Moment of inertia of rotor	J	$kgcm^2$	2.04	3.26	4.49	5.70
Mass	m	kg	3.80	5.10	6.40	7.70
Brake (optional)						
Rated voltage	U_N	V	24 ± 10%			
Rated current at 20 °C for releasing	I_N	A	0.75			
Permissible maximum speed	n_{max}	min^{-1}	10,000			
Permissible friction work	W_R	Ws	0.89×10^6			
Moment of inertia	J_B	$kgcm^2$	0.54			
Mass	m	kg	0.82			
Braking torque	M_H	Nm	9.00			

1) All figures with a tolerance of ± 10%. Other windings/rated speeds possible. Subject to technical change without notice.

2.10.1 Dimensional sketch LSN-097

Rotary encoder option	Length [mm]	LSN-097-0510	LSN-097-0750	LSN-097-0960	LSN-097-1130
1R/3R	L (L + brake)	113 (154)	143 (184)	173 (214)	203 (244)
G3 + G5	L (L + brake)	150 (190.5)	180 (220.5)	210 (250.5)	240 (280.5)
G6.1x	L (L + brake)	135 (184)	165 (214)	195 (244)	225 (274)
G6.2x + G7.2x	L (L + brake)	132 (182.5)	162 (212.5)	192 (242.5)	222 (272.5)
G6.3x	L (L + brake)	113 (158)	143 (188)	173 (218)	203 (248)
G7.3x	L (L + brake)	128 (158)	158 (188)	188 (218)	218 (248)
G12.1x	L (L + brake)	150 (190.5)	180 (220.5)	210 (250.5)	240 (280.5)

Table 2.8 Overview of the motor lengths – for overview of the encoder types see chapter 5.1; all data in [mm]

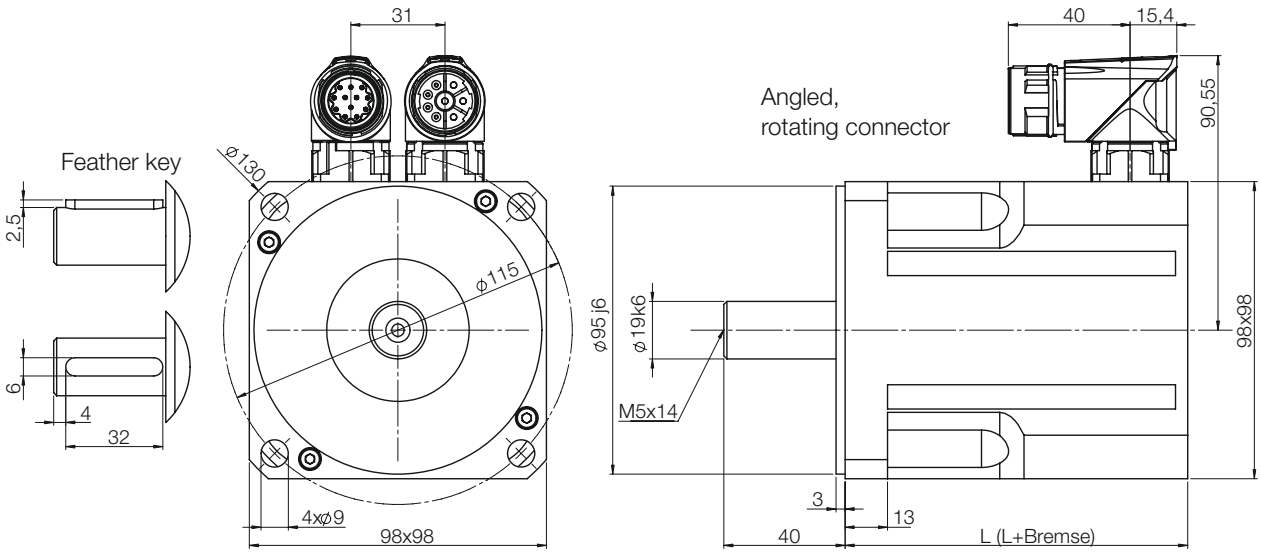

2.10.2 Characteristics LSN-097

Explanation of the characteristics:

The characteristic M_{max} describes the maximum torque possible for a short time at the related speed. It is important for dynamic processes.
The characteristic M_n shows the thermally permissible rated torque.
The characteristics are limited by the related maximum permissible speed n_{max} (for n_{max} see the table "Technical data").

LSN-097-0510-30-320

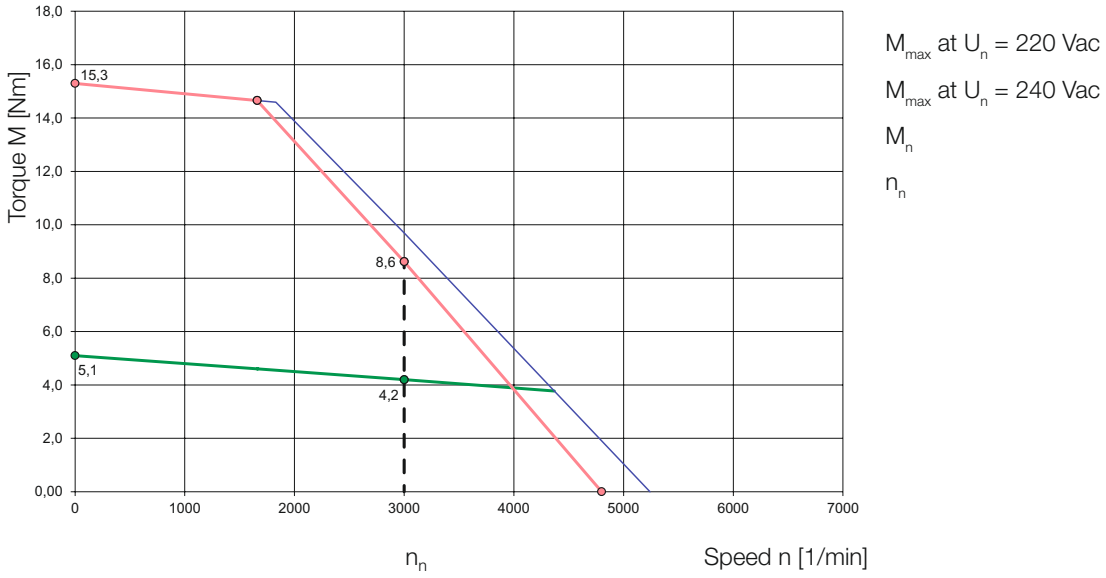

LSN-097-0750-30-320

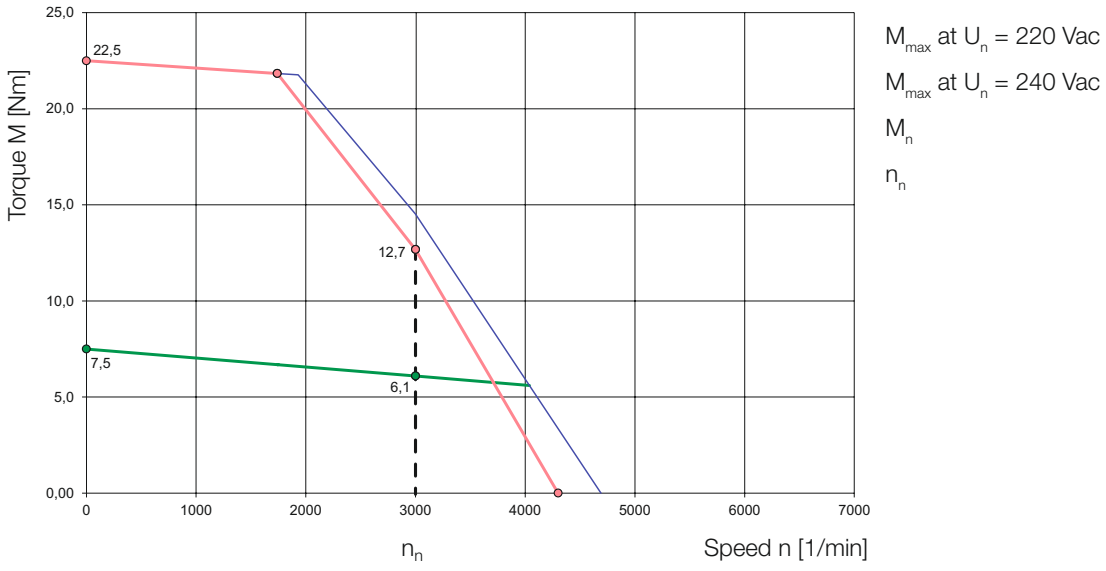

LSN-097-0960-30-320

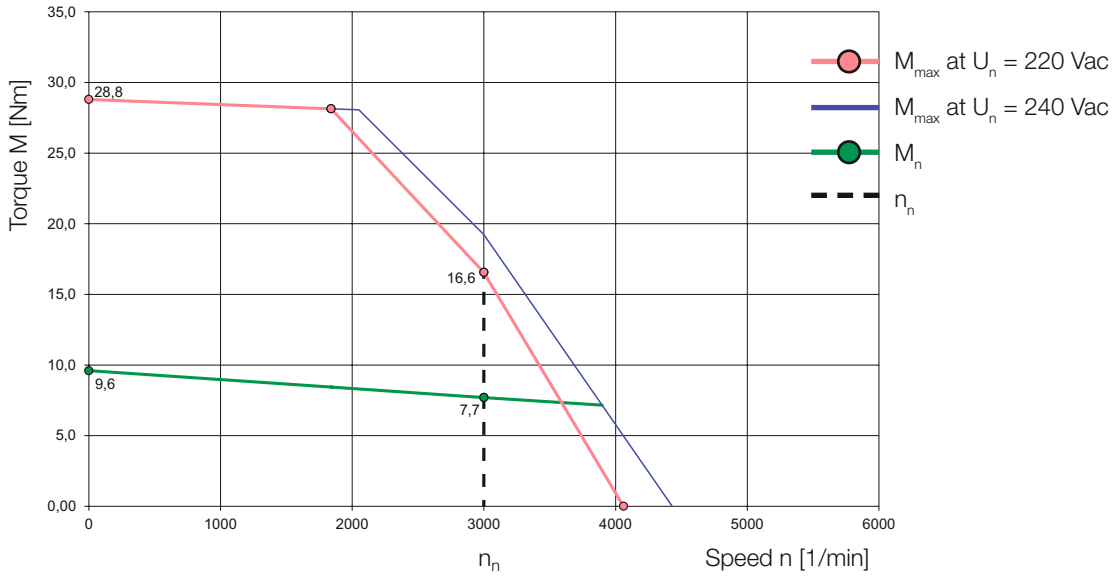

LSN-097-1130-30-320

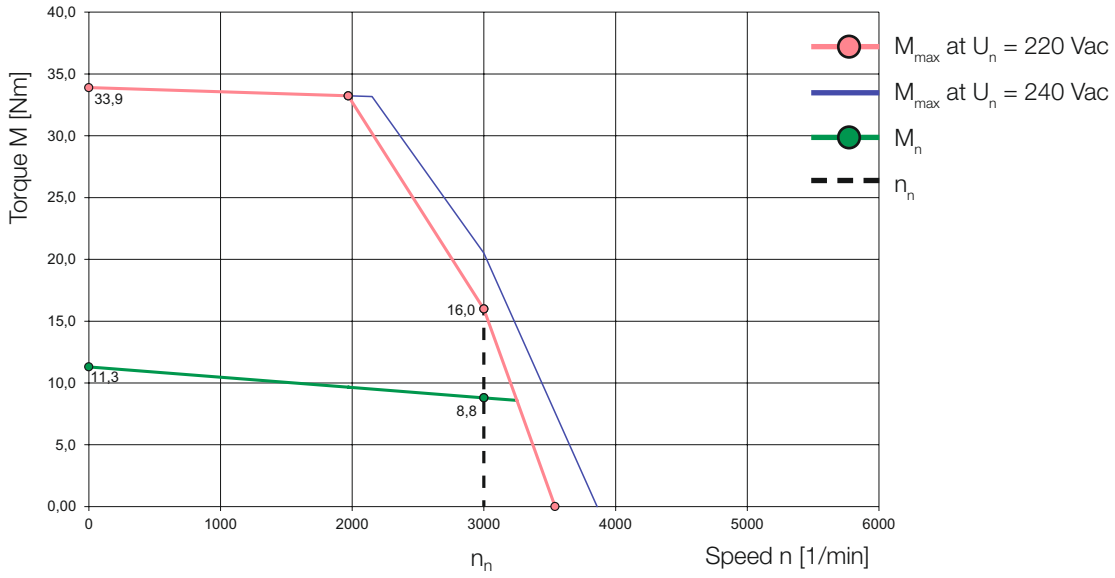

LSN-097-0510-30-560

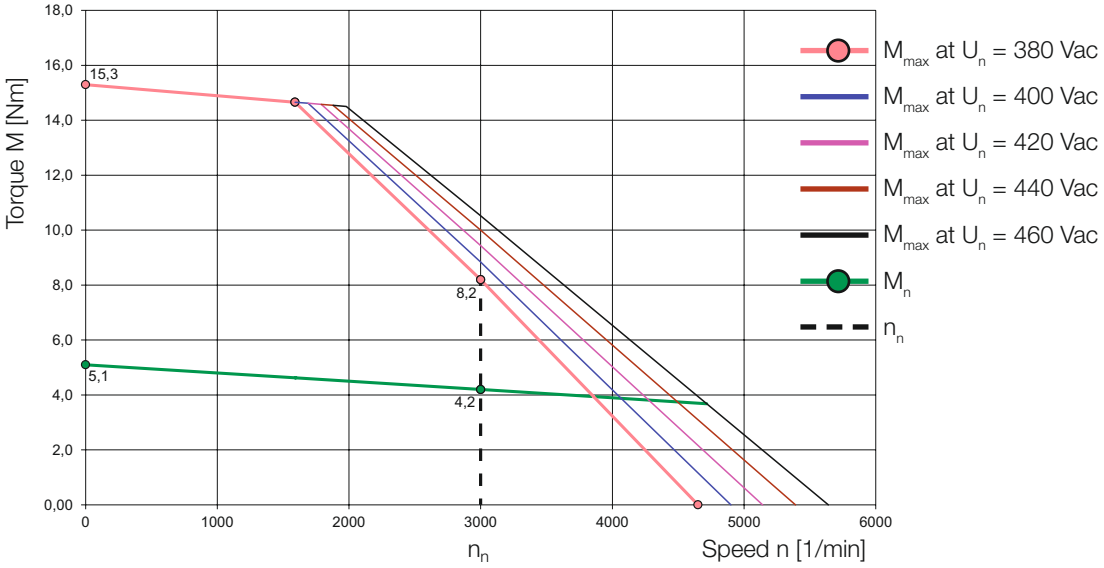

LSN-097-0750-30-560

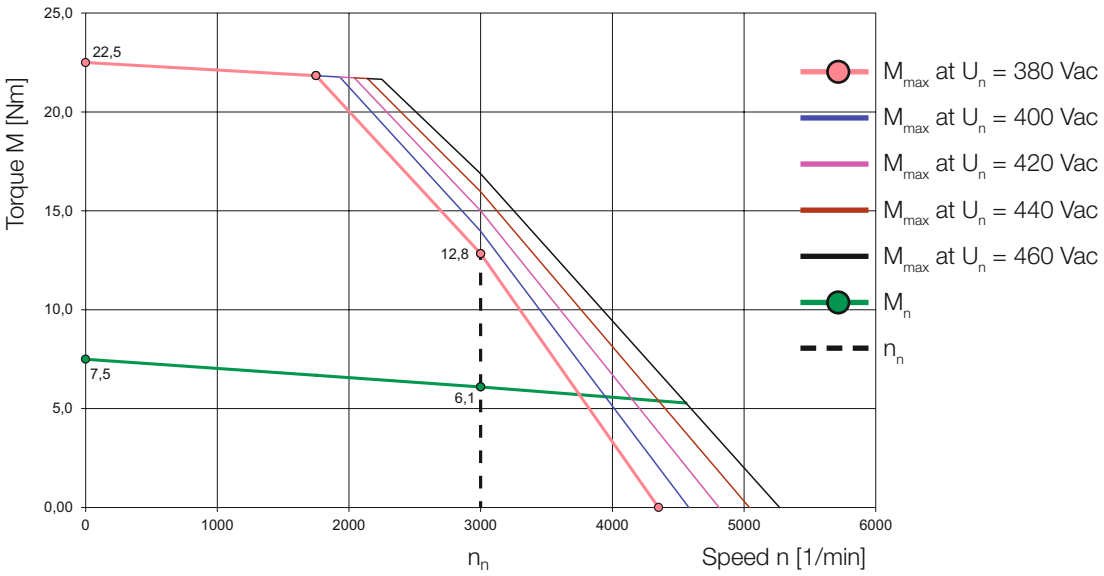

LSN-097-0960-30-560

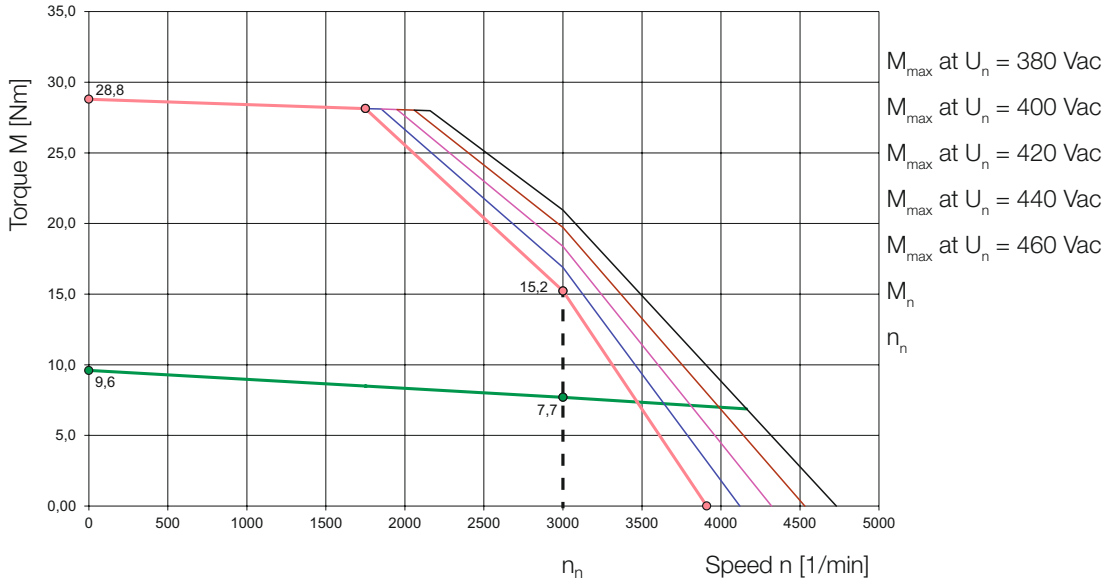

LSN-097-1130-30-560

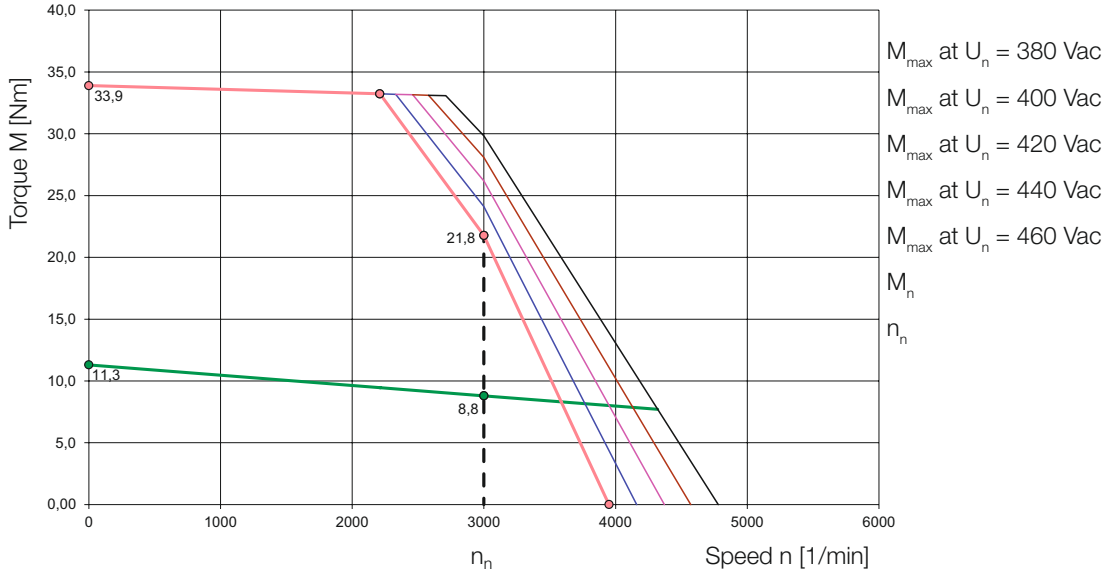

2.11 Technical data LSN-127 (U_{dc} = 560 VDC)



LSN-127-1200
-1600
-2000
-2400

Technical data[1]	Symbol	Unit	LSN-127-1200	LSN-127-1600	LSN-127-2000	LSN-127-2400
Rated speed	n_n	min^{-1}	3000			
Rated frequency	f_N	Hz	250			
DC link voltage (controller)	U_{dc}	V	560			
Rated voltage	U_n	V	291	296	297	296
Rated torque	M_n	Nm	10.50	13.80	16.00	20.00
Rated current	I_n	A	8.30	9.90	11.50	14.10
Power	P	kW	3.33	4.33	5.03	6.28
Stall torque	M_0	Nm	12.0	16.0	20.0	24.0
Stall current	I_0	A	8.0	10.1	11.6	13.8
Maximum permissible torque	M_{max}	Nm	36.0	48.0	60.0	72.0
Maximum permissible current	I_{max}	A	29.0	36.0	40.0	47.0
Maximum permissible speed	n_{max}	min^{-1}	9000			
EMF constant	K_E	V/1000 min^{-1}	91.0	96.0	104.0	105.0
Torque constant	K_T	Nm/A	1.51	1.59	1.72	1.74
Winding resistance (2 phases)	R_{2ph}	Ω	1.33	0.88	0.72	0.56
Winding inductance (2 phases)	L_{2ph}	mH	10.9	7.5	6.3	4.9
No load speed	n_0	min^{-1}	4170	3950	3650	3650
Electrical time constant	T_{el}	ms	8.2	8.5	8.8	8.8
Thermal time constant	T_{th}	min	45	55	65	75
Moment of inertia of rotor	J	$kgcm^2$	9.6	13.3	17.1	20.8
Mass	m	kg	7.50	9.50	11.5	13.5
Brake (optional)						
Rated voltage	U_N	V	24 ± 10%			
Rated current at 20 °C for releasing	I_N	A	1.00			
Permissible maximum speed	n_{max}	min^{-1}	9,000			
Permissible friction work	W_R	Ws	1.29×10^6			
Moment of inertia	J_B	$kgcm^2$	1.66			
Mass	m	kg	1.1			
Braking torque	M_H	Nm	18.00			

1) All figures with a tolerance of ± 10%. Other windings/rated speeds possible. Subject to technical change without notice.

2.11.1 Dimensional sketch LSN-127

Rotary encoder option	Connector	Length [mm]	LSN-127-1200	LSN-127-1600	LSN-127-2000	LSN-127-2400
1R/3R	M23	L (L + brake)	145 (181)	175 (211)	205 (241)	235 (271)
1R/3R/5R **(S7)**	M23	L (L + brake)	157 (193)	187 (223)	217 (253)	247 (283)
G3 + G5	M23	L (L + brake)	177 (224)	207 (254)	237 (284)	267 (314)
G6.1x	M23	L (L + brake)	160 (209)	190 (239)	220 (269)	250 (299)
G6.2x + G7.2x	M23	L (L + brake)	157 (260)	187 (236)	217 (266)	247 (296)
G6.3x	M23	L (L + brake)	145 (181)	175 (211)	205 (241)	235 (271)
G7.3x	M23	L (L + brake)	157 (197)	187 (227)	217 (257)	247 (287)
G6.3x + G7.3x **(S7)**	M23	L (L + brake)	157 (193)	187 (223)	217 (253)	247 (283)

(S7) For details see Figure 4.4 on page 114

Table 2.9 Overview of the motor lengths – for overview of the encoder types see chapter 5.1; all data in [mm]

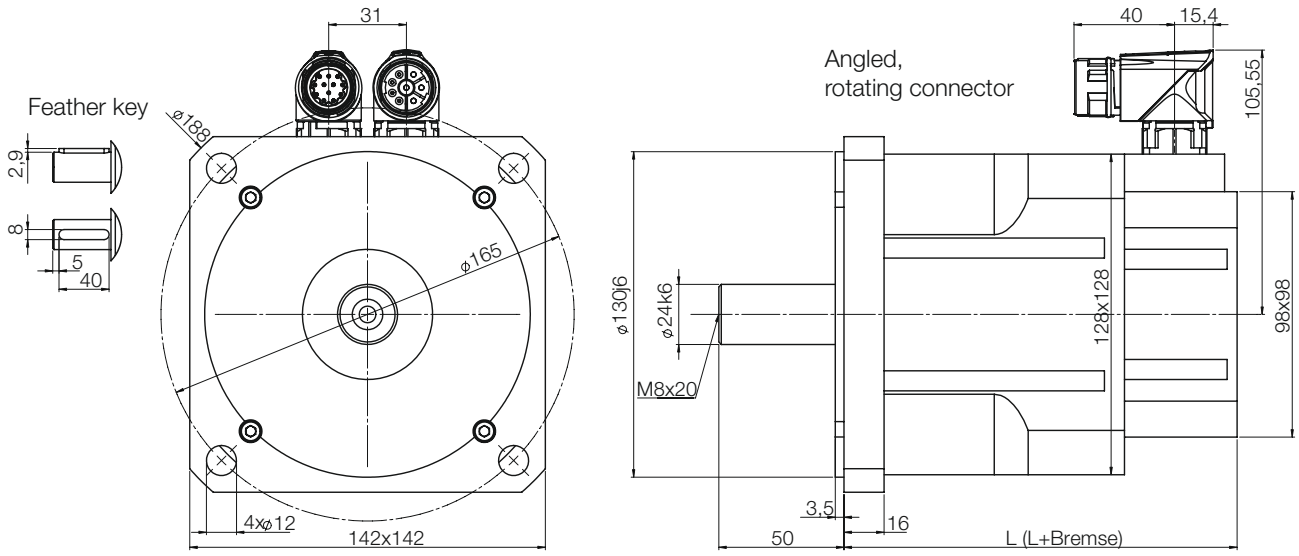

2.11.2 Characteristics LSN-127

Explanation of the characteristics:

The characteristic M_{max} describes the maximum torque possible for a short time at the related speed. It is important for dynamic processes.
The characteristic M_n shows the thermally permissible rated torque.
The characteristics are limited by the related maximum permissible speed n_{max} (for n_{max} see the table "Technical data").

LSN-127-1200-30-560

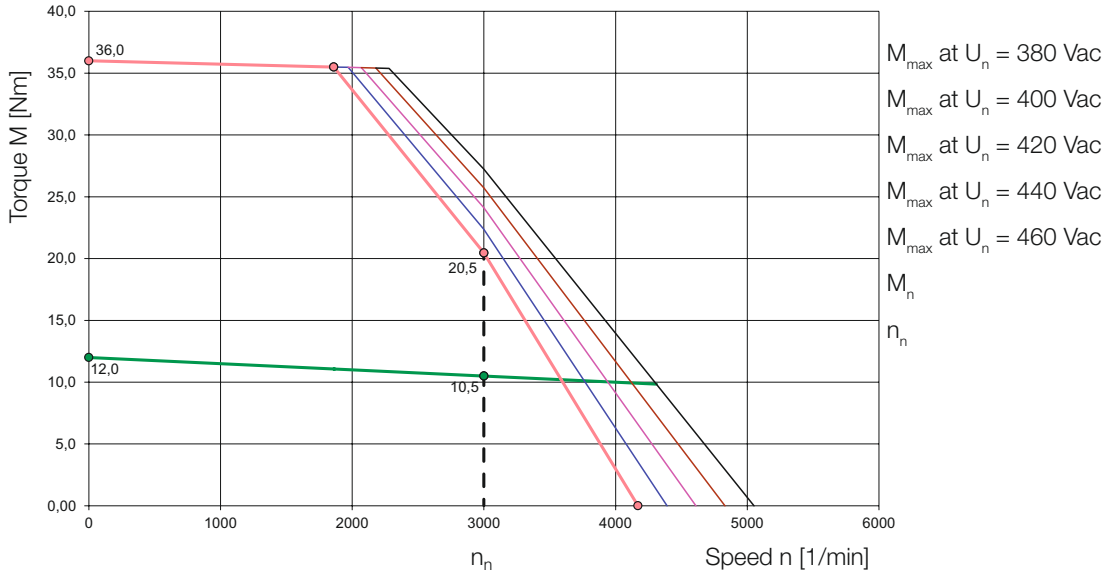

LSN-127-1600-30-560

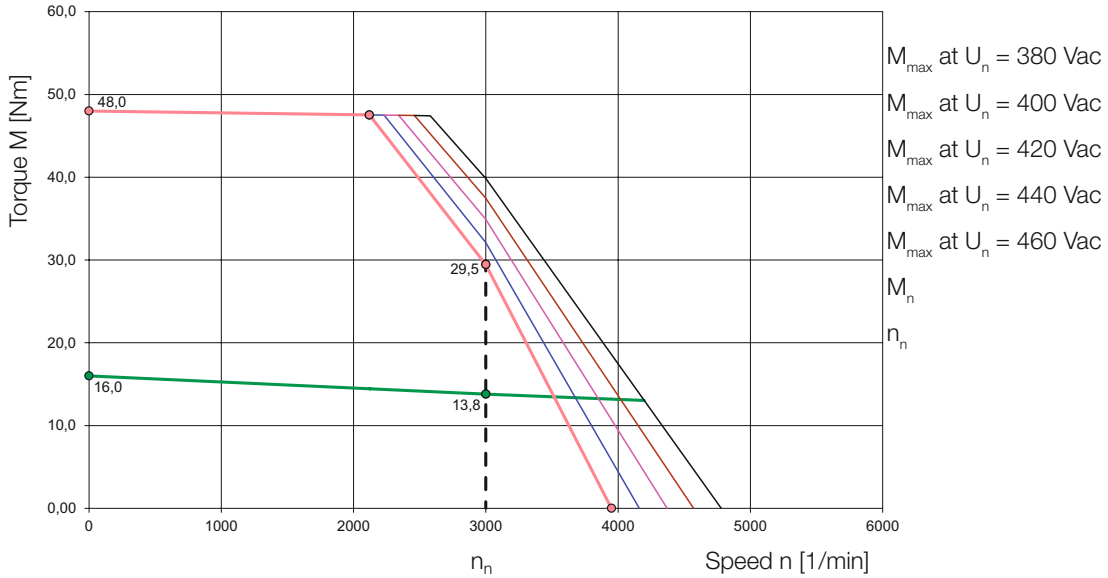

LSN-127-2000-30-560

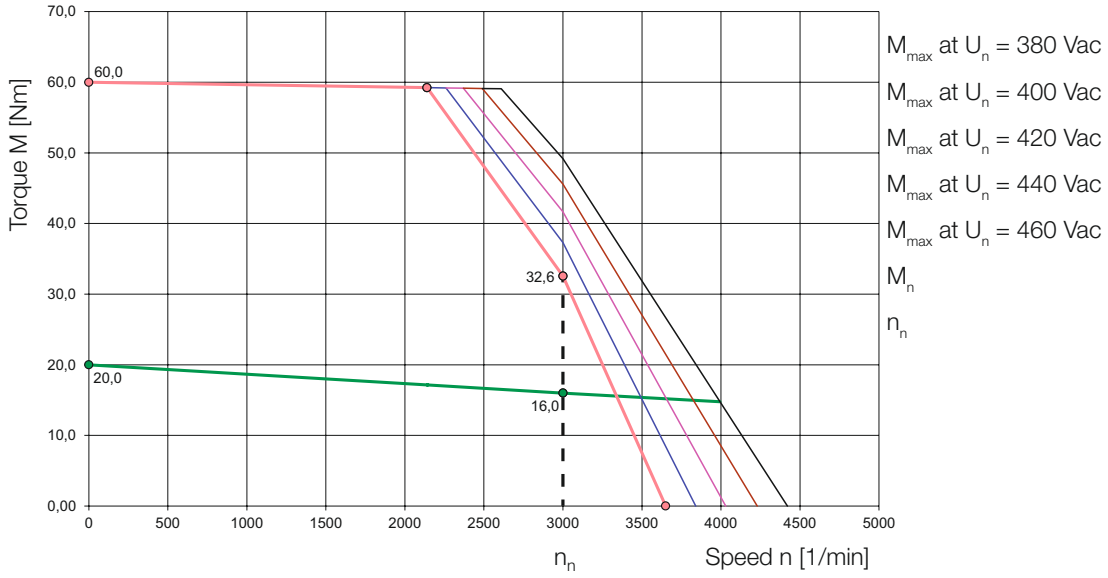

LSN-127-2400-30-560

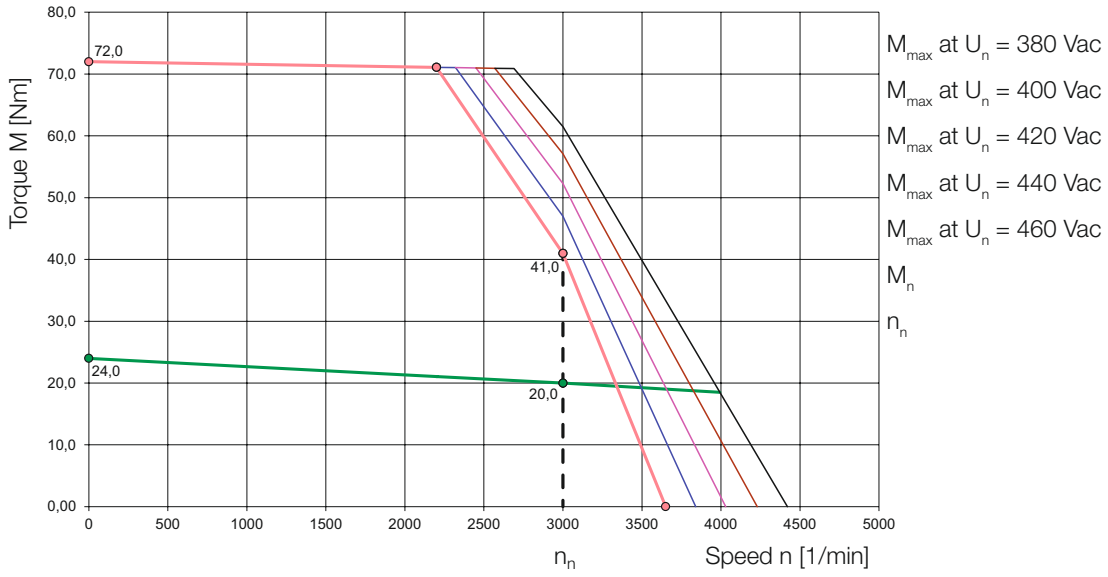

2.12 Technical data LSN-158 (U_{dc} = 560 VDC)



LSN-158-1800
-2400
-3000
-4400

Technical data[1)]	Symbol	Unit	LSN-158-1800	LSN-158-2400	LSN-158-3000	LSN-158-3800	LSN-158-4400
Rated speed	n_n	min^{-1}	2000 / 3000				
Rated frequency	f_N	Hz	166.67 / 250				
DC link voltage (controller)	U_{dc}	V	560				
Rated voltage	U_n	V	269 / 274	274 / 269	288 / 284	284 / 277	308 / 267
Rated torque	M_n	Nm	14.80 / 13.00	20.00 / 17.00	25.30 / 21.00	29.00 / 25.00	36.50 / 30.00
Rated current	I_n	A	8.60 / 11.00	10.70 / 13.80	12.90 / 16.20	15.00 / 19.70	17.30 / 24.40
Power	P	kW	3.01 / 4.08	4.19 / 5.34	5.30 / 6.60	6.07 / 7.85	7.64 / 9.42
Stall torque	M_0	Nm	18.0	24.0	30.0	38.0	44.0
Stall current	I_0	A	8.9 / 12.2	10.8 / 15.3	12.8 / 17.8	16.7 / 23.9	17.7 / 28.3
Maximum permissible torque	M_{max}	Nm	51.0	72.0	90.0	114.0	132.0
Maximum permissible current	I_{max}	A	33.0 / 45.0	42.0 / 60.0	46.0 / 64.0	64.0 / 93.0	64.0 / 102.0
Maximum permissible speed	n_{max}	min^{-1}	6000				
EMF constant	K_E	V/1000 min^{-1}	123.0 / 89.0	134.0 / 95.0	142.0 / 102.0	138.0 / 96.0	150.0 / 94.0
Torque constant	K_T	Nm/A	2.00 / 1.47	2.20 / 1.57	2.40 / 1.69	2.30 / 1.59	2.50 / 1.55
Winding resistance (2 phases)	R_{2ph}	Ω	1.19 / 0.62	0.81 / 0.41	0.63 / 0.33	0.52 / 0.25	0.49 / 0.19
Winding inductance (2 phases)	L_{2ph}	mH	13.7 / 7.2	10.8 / 5.5	9.2 / 4.7	7.2 / 3.5	7.0 / 2.8
No load speed	n_0	min^{-1}	3090 / 4260	2830 / 4000	5130 / 3720	2750 / 3950	2750 / 4040
Electrical time constant	T_{el}	ms	11.5 / 11.6	13.3 / 13.4	14.5 / 14.2	13.8 / 14.0	14.4 / 14.5
Thermal time constant	T_{th}	min	42	47	52	57	62
Moment of inertia of rotor	J	$kgcm^2$	18.5	25.6	32.7	39.9	47.0
Mass	m	kg	10.1	12.8	15.5	18.3	21.0
Brake (optional)							
Rated voltage	U_N	V	24 ± 10%				
Rated current at 20 °C for releasing	I_N	A	1.10				
Permissible maximum speed	n_{max}	min^{-1}	6,000				
Permissible friction work	W_R	Ws	2.90×10^6				
Moment of inertia	J_B	$kgcm^2$	5.56				
Mass	m	kg	3.1				
Braking torque	M_H	Nm	36.00				

1) All figures with a tolerance of ± 10%. Other windings/rated speeds possible. Subject to technical change without notice.

2.12.1 Dimensional sketch LSN-158

Rotary encoder option	Connector	Length [mm]	LSN-158-1800	LSN-158-2400	LSN-158-3000	LSN-158-3800	LSN-158-4400
1R/3R	M23/M40	L (L + brake)	158 (222) / 165 (229)	183 (247) / 190 (254)	208 (272) / 215 (279)	233(297) / 240(304)	258 (322) / 265 (329)
G3 + G5	M23/M40	L (L + brake)	178 (252) / 178 (252)	203 (277) / 203 (277)	228 (302) / 228 (302)	253 (327) / 253 (327)	278 (352) / 278 (352)
G6.1x	M23/M40	L (L + brake)	161 (225) / 168 (232)	186 (250) / 193 (257)	211 (275) / 218 (282)	236 (300) / 243 (307)	261 (325) / 268 (332)
G6.2x + G7.2x	M23/M40	L (L + brake)	158 (222) / 165 (229)	183 (247) / 190 (254)	208 (272) / 215 (279)	233 (297) / 240 (304)	258 (322) / 265 (329)
G6.3x + G7.3x	M23/M40	L (L + brake)	158 (222) / 165 (229)	183 (247) / 190 (254)	208 (272) / 215 (279)	233 (297) / 240 (304)	258 (322) / 265 (329)

Table 2.10 Overview of the motor lengths – for overview of the encoder types see chapter 5.1; all data in [mm]

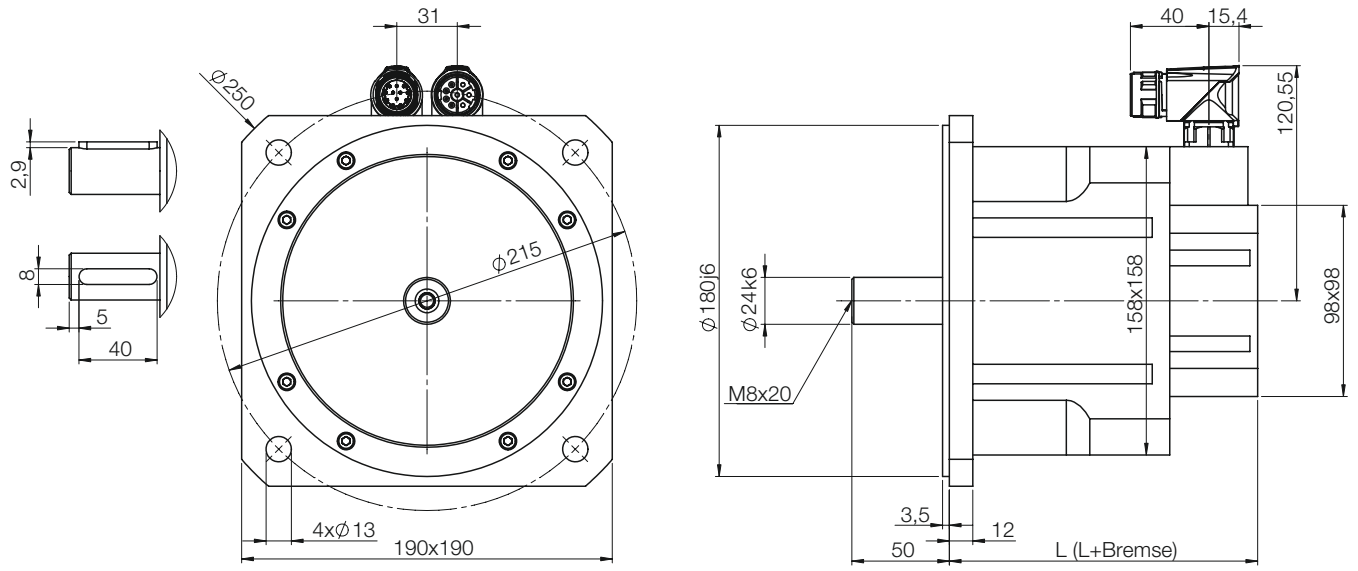

2.12.2 Characteristics LSN-158

Explanation of the characteristics:

The characteristic M_{max} describes the maximum torque possible for a short time at the related speed. It is important for dynamic processes.
The characteristic M_n shows the thermally permissible rated torque.
The characteristics are limited by the related maximum permissible speed n_{max} (for n_{max} see the table "Technical data").

LSN-158-1800-20-560

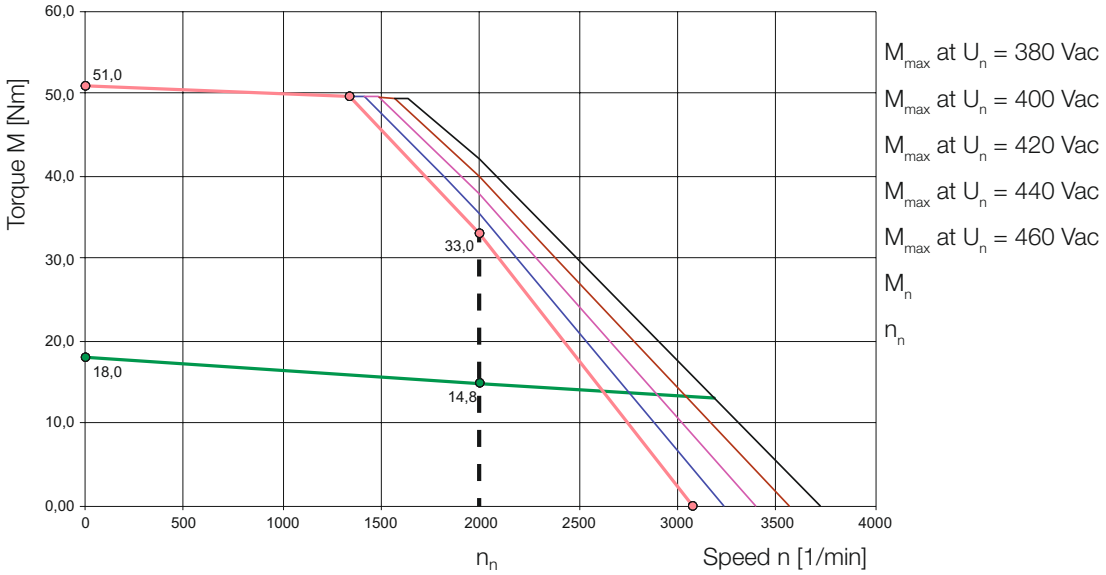

LSN-158-2400-20-560

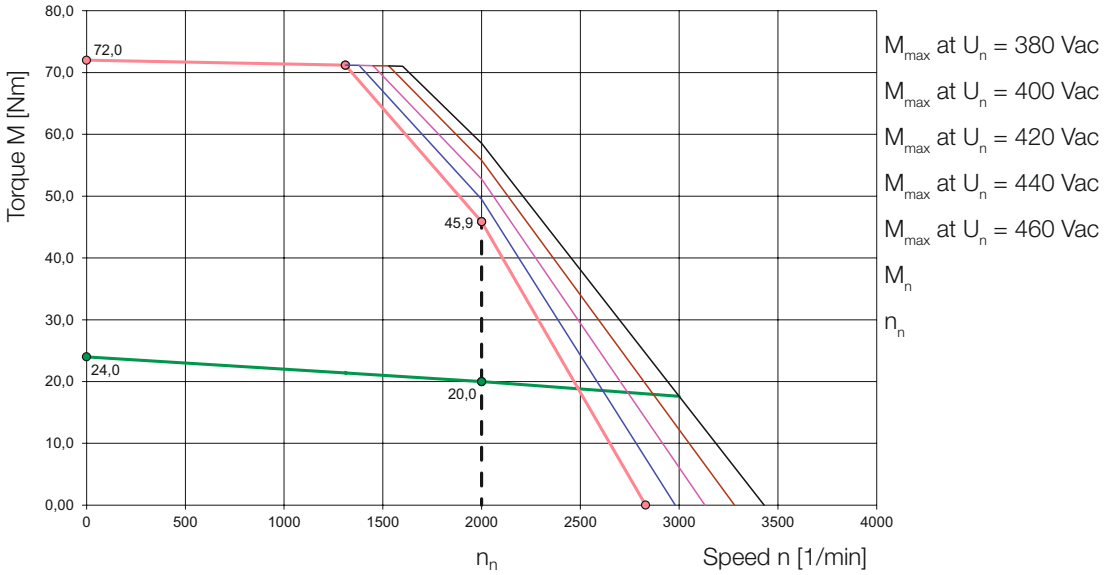

LSN-158-1800-30-560

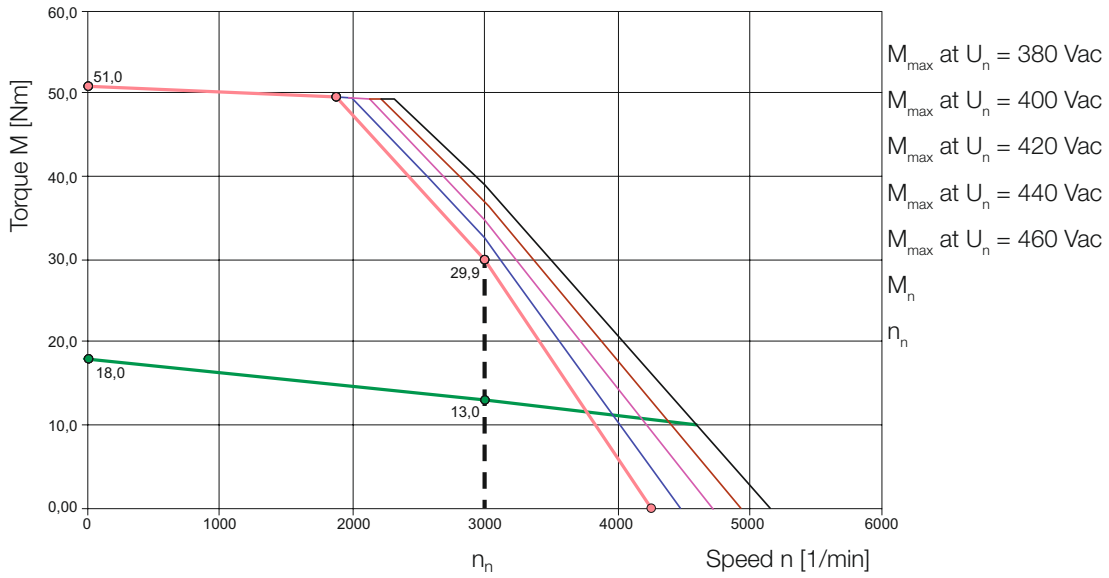

LSN-158-2400-30-560

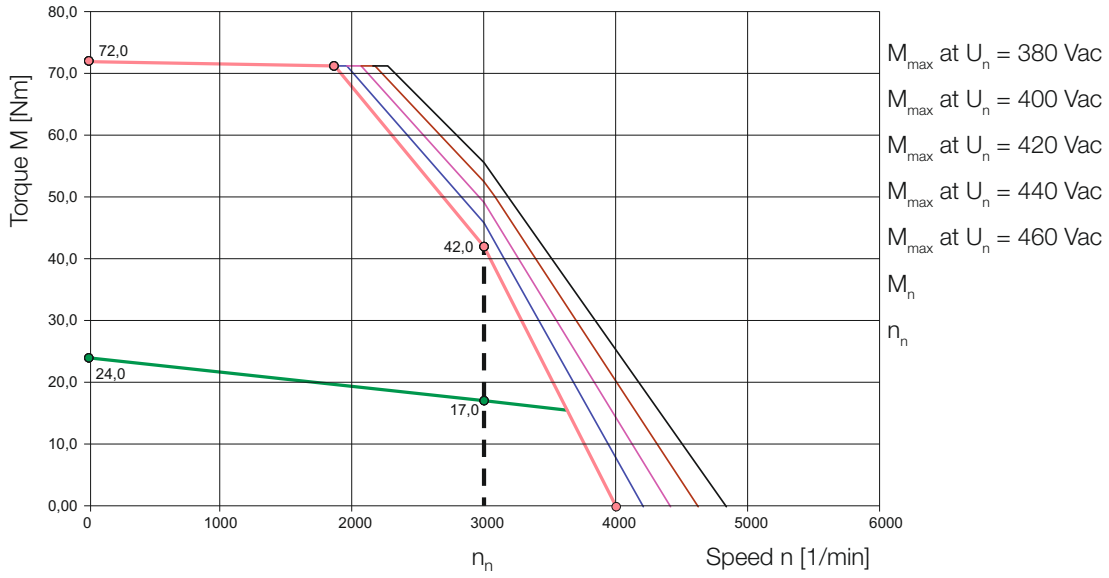

LSN-158-3000-30-560

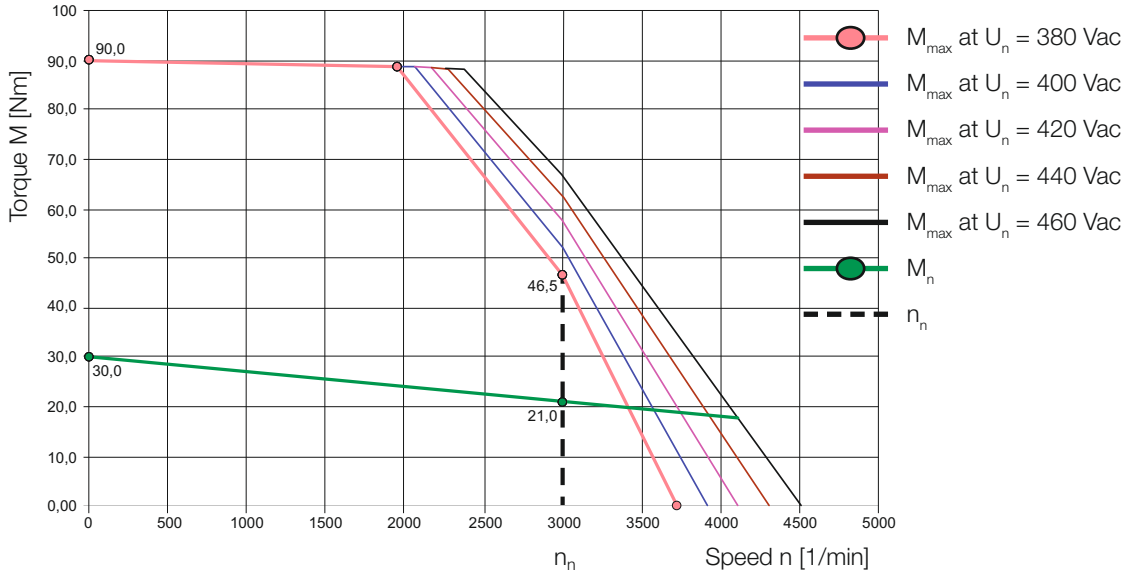

LSN-158-3800-30-560

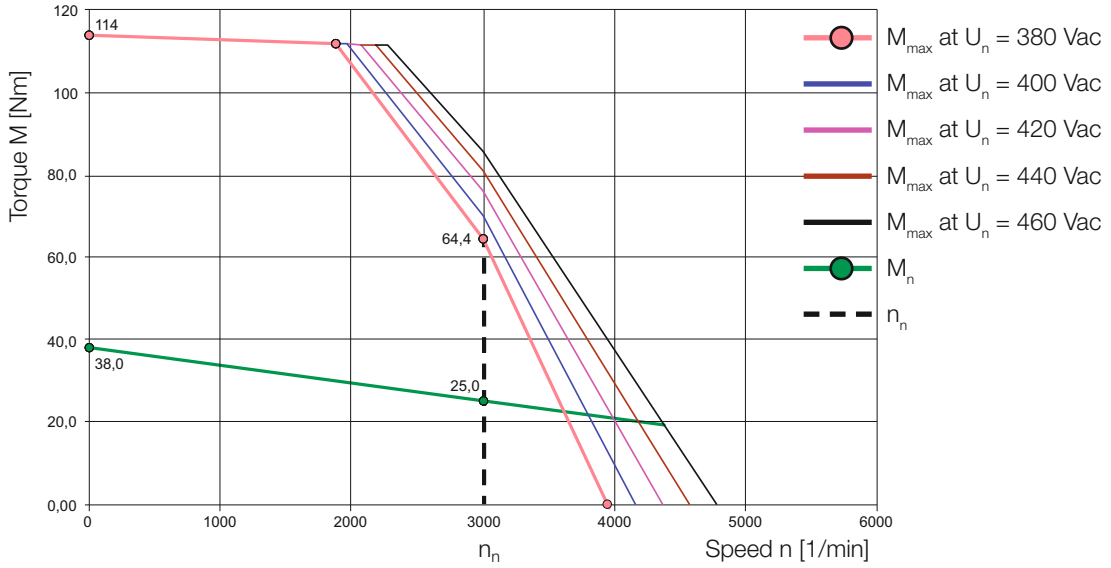

LSN-158-4400-30-560

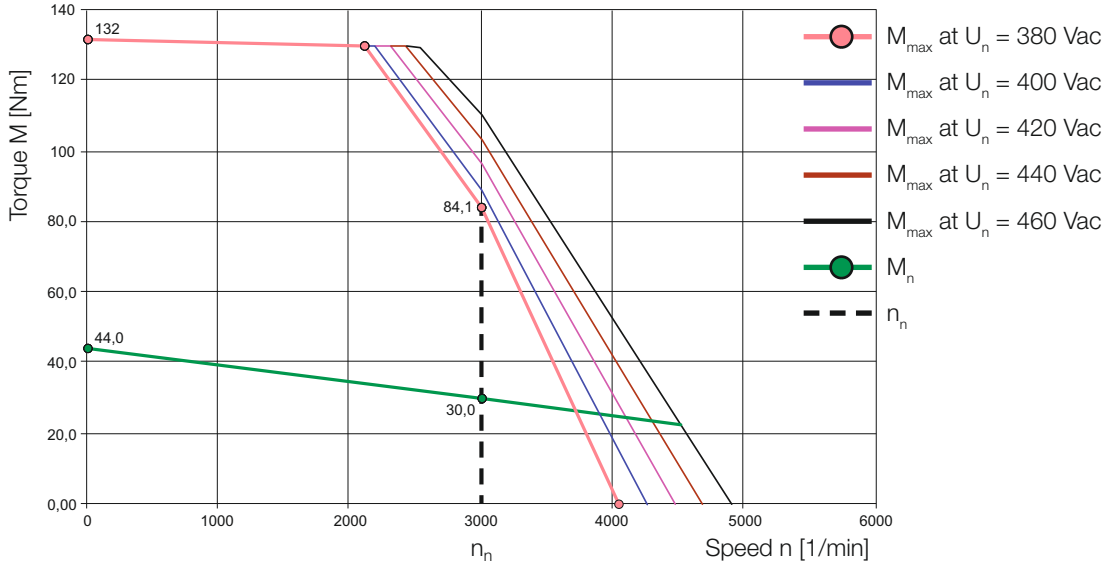

2.13 Technical data LSN-190 (U_{dc} = 560 VDC)



LSN-190-3000
-4000
-5000
-6000

Technical data[1]	Symbol	Unit	LSN-190-3000	LSN-190-4000	LSN-190-5000	LSN-190-6000
Rated speed	n_n	min^{-1}	2000 / 3000			1000 / 2500
Rated frequency	f_N	Hz	166.67 / 250			83.33 / 208.33
DC link voltage (controller)	U_{dc}	V	560			
Rated voltage	U_n	V	297 / 333	311 / 257	269 / 265	282 / 349
Rated torque	M_n	Nm	26.10 / 23.00	32.80 / 25.00	40.40 / 30.00	54.00 / 36.20
Rated current	I_n	A	13.20 / 15.50	15.40 / 20.10	21.80 / 24.40	14.60 / 20.70
Power	P	kW	5.47 / 7.23	6.87 / 7.85	8.46 / 9.42	5.65 / 9.48
Stall torque	M_0	Nm	30.0	40.0	50.0	60.0
Stall current	I_0	A	13.0 / 16.3	16.7 / 26.3	22.7 / 31.5	15.8 / 30.0
Maximum permissible torque	M_{max}	Nm	85.0	120.0	150.0	180.0
Maximum permissible current	I_{max}	A	46.0 / 58.0	59.0 / 90.0	79.0 / 109.0	51.0 / 102.0
Maximum permissible speed	n_{max}	min^{-1}	6000			
EMF constant	K_E	V/1000 min^{-1}	139.0 / 111.0	145.0 / 92.0	133.0 / 96.0	241.0 / 121.0
Torque constant	K_T	Nm/A	2.30 / 1.84	2.40 / 1.52	2.20 / 1.59	4.00 / 2.00
Winding resistance (2 phases)	R_{2ph}	Ω	0.64 / 0.41	0.43 / 0.17	0.25 / 0.13	0.62 / 0.16
Winding inductance (2 phases)	L_{2ph}	mH	10.1 / 6.4	7.8 / 3.1	4.9 / 2.6	13.0 / 3.3
No load speed	n_0	min^{-1}	2730 / 3420	2620 / 4130	2850 / 3950	1570 / 3140
Electrical time constant	T_{el}	ms	15.8 / 15.6	18.1 / 18.2	19.6 / 20.0	21.0 / 21.0
Thermal time constant	T_{th}	min	80	90	100	108
Moment of inertia of rotor	J	$kgcm^2$	49.5	69	88	107
Mass	m	kg	16.50	21.50	26.5	31.5
Brake (optional)						
Rated voltage	U_N	V	24 ± 10%			
Rated current at 20 °C for releasing	I_N	A	1.10			
Permissible maximum speed	n_{max}	min^{-1}	8,000			
Permissible friction work	W_R	Ws	6.20×10^6			
Moment of inertia	J_B	$kgcm^2$	16			
Mass	m	kg	3.6			
Braking torque	M_H	Nm	36.00 Nm			

1) All figures with a tolerance of ± 10%. Other windings/rated speeds possible. Subject to technical change without notice.

2.13.1 Dimensional sketch LSN-190

Rotary encoder option	Connector	Length [mm]	LSN-190-3000	LSN-190-4000	LSN-190-5000	LSN-190-6000
1R/3R	M23/M40	L (L + brake)	181 (240) / 188 (247)	211 (270) / 218 (277)	241 (300) / 248 (307)	271 (330) / 278 (337)
G3 + G5	M23/M40	L (L + brake)	201 (260) / 201 (260)	231 (290) / 231 (290)	261 (320) / 261 (320)	291 (350) / 291 (350)
G6.1x	M23/M40	L (L + brake)	184 / 191	214 / 221	244 / 251	274 / 281
G6.2x + G7.2x	M23/M40	L (L + brake)	181 (240) / 188 (247)	211 (270) / 218 (277)	241 (300) / 248 (307)	271 (330) / 278 (337)
G6.3x + G7.3x	M23/M40	L (L + brake)	181 (240) / 188 (247)	211 (270) / 218 (277)	241 (300) / 248 (307)	271 (330) / 278 (337)

Table 2.11 Overview of the motor lengths – for overview of the encoder types see chapter 5.1; all data in [mm]

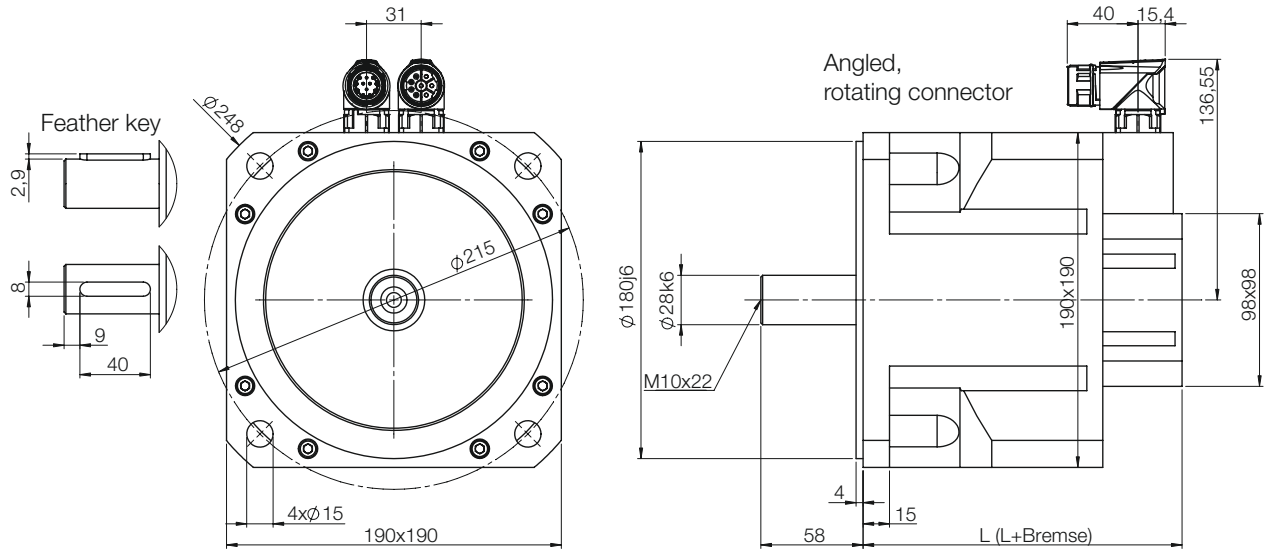

2.13.2 Characteristics LSN-190

Explanation of the characteristics:

The characteristic M_{max} describes the maximum torque possible for a short time at the related speed. It is important for dynamic processes.
The characteristic M_n shows the thermally permissible rated torque.
The characteristics are limited by the related maximum permissible speed n_{max} (for n_{max} see the table "Technical data").

LSN-190-3000-20-560

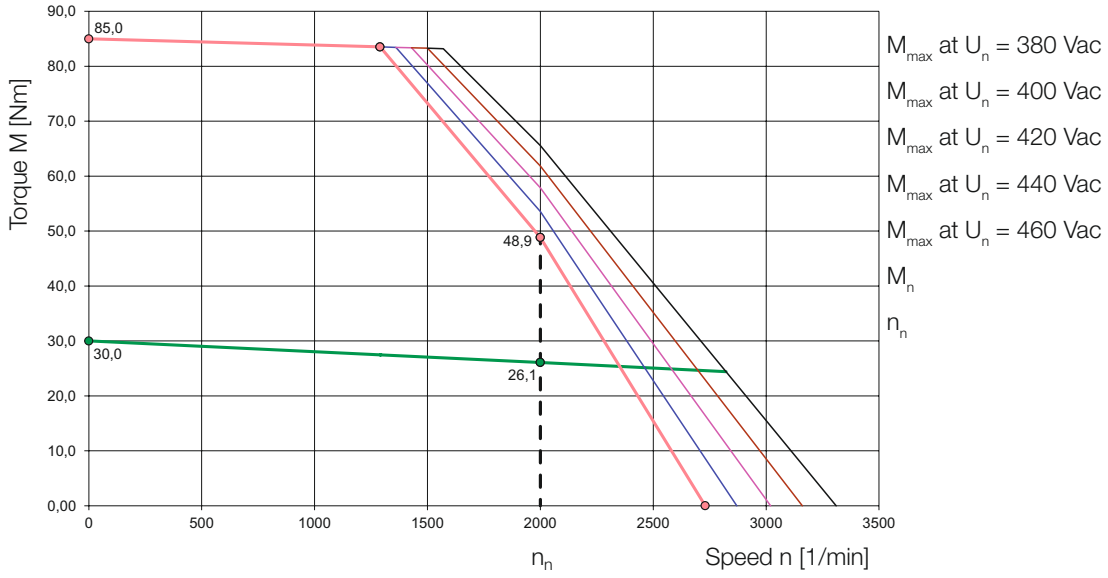

LSN-190-4000-20-560

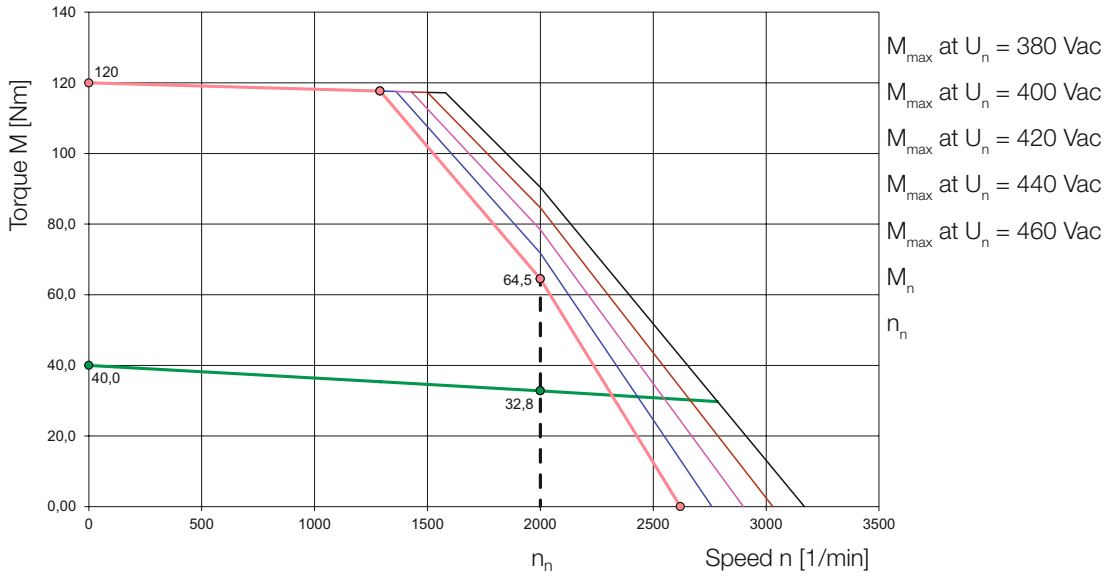

LSN-190-5000-20-560

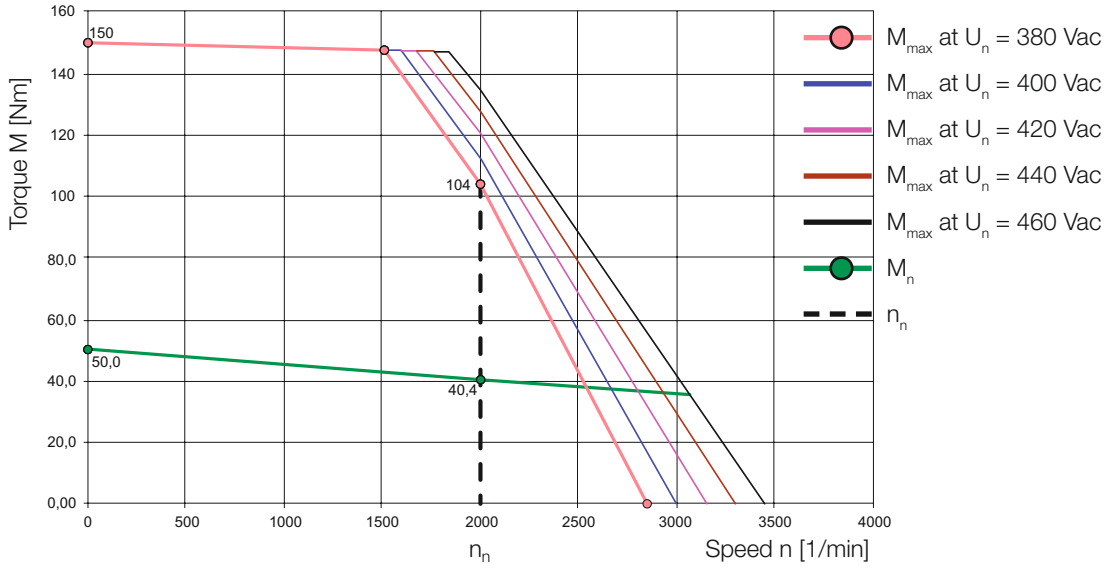

LSN-190-6000-10-560

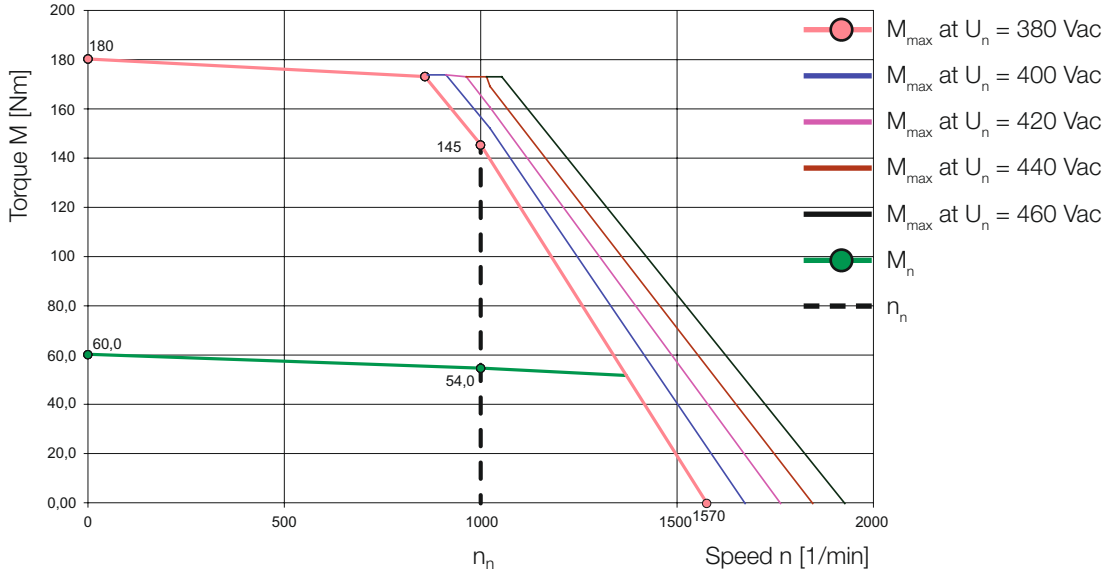

LSN-190-3000-30-560

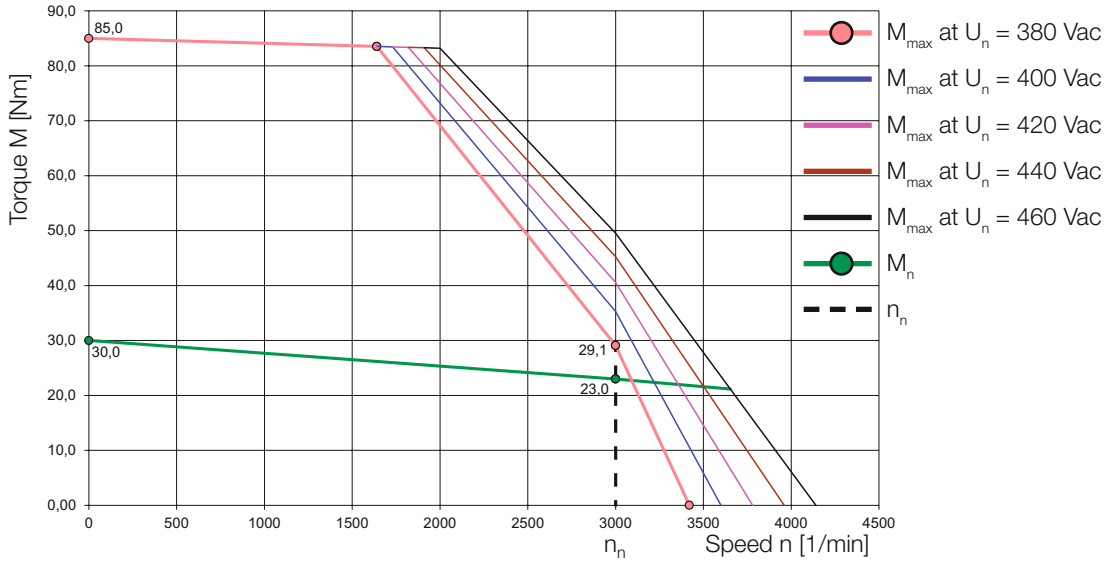

LSN-190-4000-30-560

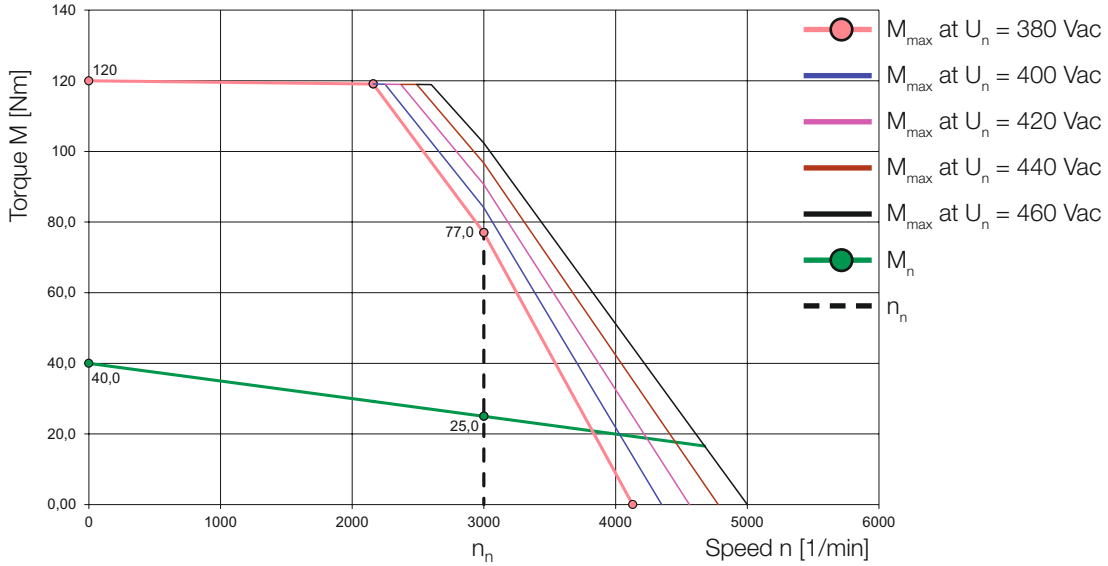

LSN-190-5000-30-560

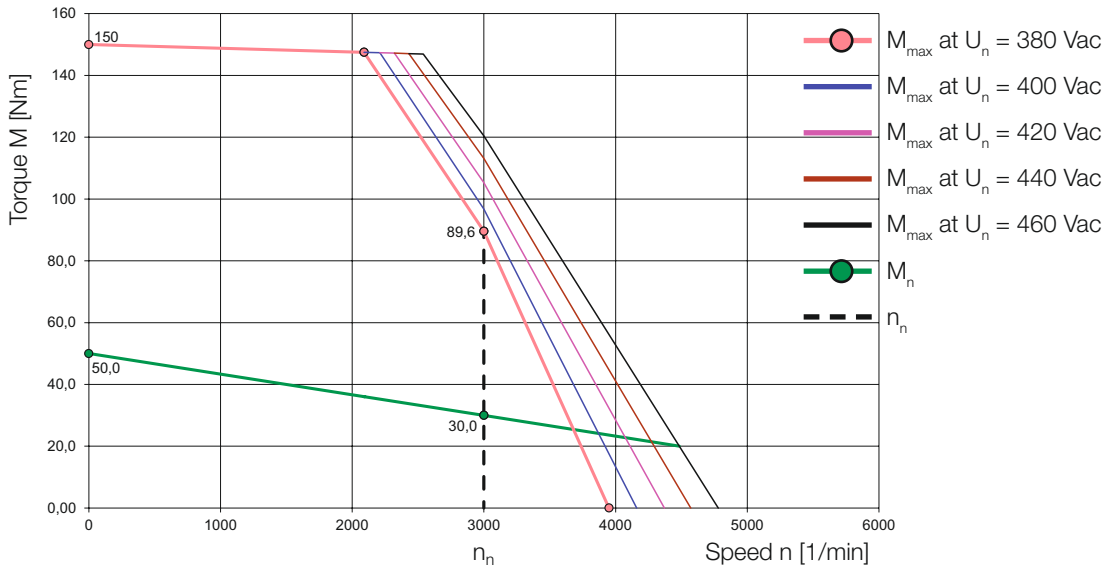

LSN-190-6000-25-560

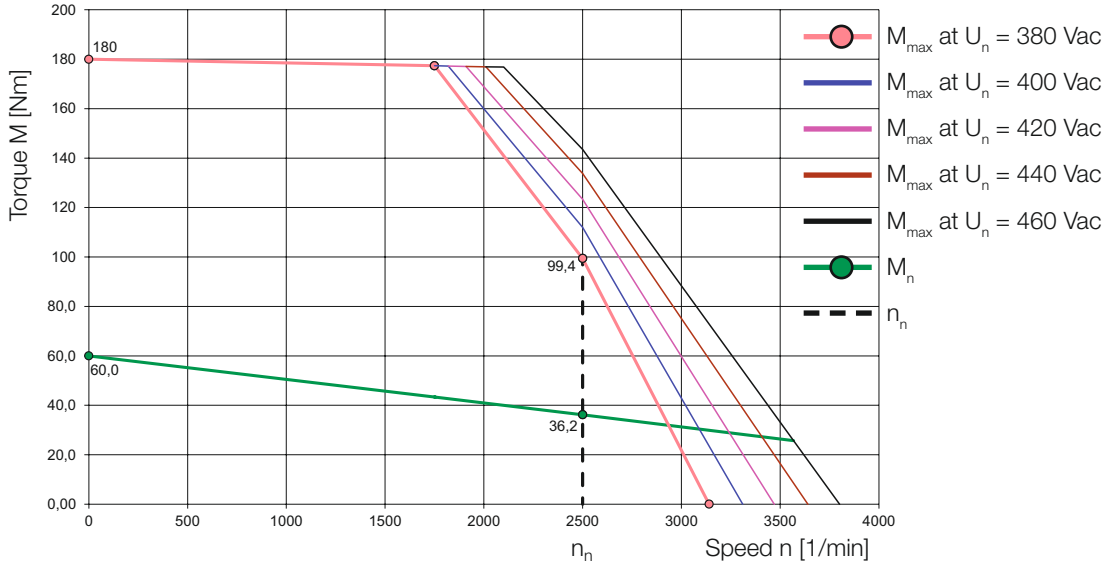

Space for your notes



3 The LST servomotor – versatile with large performance range

3.1 Applications

The synchronous servomotors from KEBA Industrial Automation Germany GmbH are brushless three-phase motors for high-end servo applications and are available in all speed and voltage variants. They are particularly suitable for positioning tasks on machine tools, industrial robots, transfer lines, etc., as well as for applications with high demands on dynamic performance and stability.
The standard models of our servomotors are equipped to handle a wide range of applications. In addition, available options include, e.g., a holding brake, degree of protection IP65, a very wide variety of temperature monitors, a model with flying lead, various encoders, as well as customer-specific flanges and special shafts. Optionally, we also offer our servomotors in EX (explosion-proof) variants. Please contact our drive specialists for details.
The LST product range in the rated torque range (M_0) from 0.1 Nm to 115 Nm (externally cooled up to 145 Nm) is equipped with conventional (distributed) winding technology. It combines all the advantages of the 6-pole synchronous servomotor in the classic design.

3.2 Performance features of the LST servomotors

- Well suited to speeds up to 9000 min^{-1}
- High overload capacity
- Increased rotor moment of inertia
- High synchronism
- Large variety of sizes
- Plug-in connections
- UL acceptance
- Various encoders available as options
- Low voltage windings available

3.3 Order codes, KEBA synchronous motors in the LST product range

NOTE:

Preferred types are motors or options that are available at short notice from stock. The wide range of variants means there are many possible combinations. **The order options marked with a "*" are preferred types and are available with short delivery times.**

	LST	-	074	-	1	-	30	-560	/	T1	, B	, FL	, P	, X	, K	, S4	, W	, G6.1S
										Options (if available, sequence varies)								
KEBA synchronous motor product range T																		
Edge dimensions in mm (not flange dimensions)			037 050 074 097 127 158 190 220															
Length (1... shortest motor type, 5... longest motor type) Is dependent on the encoder selected.					1 2 3 4 5													
Rated speed (x100) in min^{-1}							30 45 60											
Controller DC link voltage (VDC)								24 48 320 560										
Options Thermal protection										Klixon thermal switch → **T0**								
										DIN PTC in the encoder connector STANDARD → *T1E								
										DIN PTC in the power connector STANDARD → *T1M								
										drillings DIN PTC in the encoder connector → **3T1E**								
										drillings DIN PTC in the power connector → **3T1M**								
										(Do not use for new projects) KTY84-30 in the encoder connector → **T4E**								
										(Do not use for new projects) KTY84-30 in the power connector → **T4M**								
										(Replacement type for KTY84-30) PT1000 in the encoder connector → **T15E**								
										(Replacement type for KTY84-30) PT1000 in the power connector → **T15M**								
Brake option											**Holding brake 24 VDC *B**							
Preparation for external fan option (please order external fan separately)												**FI**						
Feather key option													**Feather key according to DIN 6885, sheet 1 *P**					

Table 3.12 Order code LST servomotors

| | | Options (if available, sequence varies) | | |

3.4 Features of the standard version

Definition of standard model	
• Smooth motor shaft (no feather key)	• Resolver connector straight
• Resolver with 1 pole pair 1R	• Power connector straight
• IP64 according to DIN 40050 except flange	• Double basic insulation (winding and PTC) T1
• IP54 according to DIN VDE0530-5 and EN 60034-5 (rotating machinery)	

3.5 Ordering example LST servomotors:

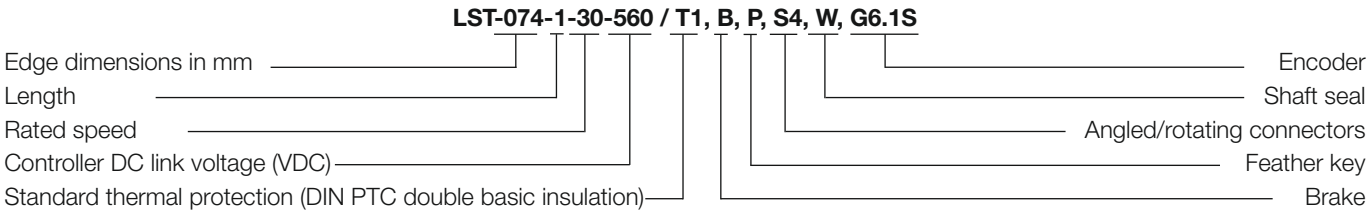

Ordering options

- Holding brake
- Various encoders
- Feather key DIN 6885
- Special shaft/flange
- Special mechanical design
- Servo gearboxes
- Flying lead
- Preparation for external fan
- ATEX acceptance
- etc.

3.6 Radial and axial force, servomotor without brake

Sizes	Radial force F_{Rm} [N] at rated speed n [min^{-1}]					Axial force F_{Am} [N] at rated speed n [min^{-1}]					F_G
	1000	2000	3000	4500	6000	1000	2000	3000	4500	6000	[N]
LST-037	230	185	160	140	130	44	35	31	27	24	2
LST-050	325	260	225	195	175	62	50	43	37	34	2
LST-074	535	425	370	325	295	100	80	70	60	55	6
LST-097	920	730	640	560	510	175	140	120	105	95	18
LST-127	1000	790	690	600	550	190	150	130	115	105	34
LST-158	1020	810	710	620	560	195	155	135	120	110	60
LST-190	1950	1550	1350	1170	1070	370	290	260	225	200	100
LST-220	2500	1950	1700	1490	1350	470	370	320	280	260	200

Table 3.14 Permissible axial and lateral forces on the LST servomotors. F_G ... force due to weight of the rotor.

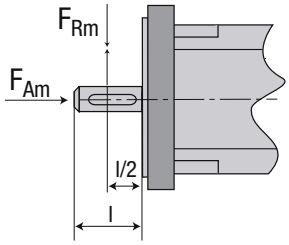

The table shows the max. permissible lateral force (radial force F_R) at the point of application l/2 and the max. permissible axial force F_{Am} for a service life of 20,000 h. A lateral force that does not act on the middle of the end of the shaft can be simply converted to the different leverage.

Either the permissible radial force or the axial force is allowed to act on the motor shaft!

Technical data, design

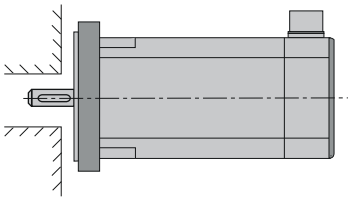

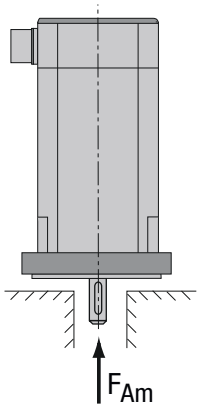

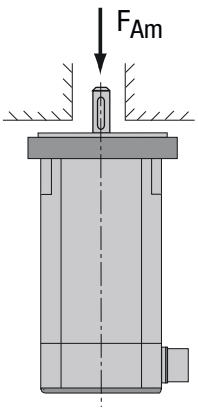

Design	B5	V1	V3
Shaft	Open end of the shaft	Open end of the shaft at bottom	Open end of the shaft at top
Fastening	Flange mounting Access from the housing side	Flange mounting at bottom Access from the housing side	Flange mounting at top Access from the housing side

NOTE:

The permissible axial forces (F_A) apply for vertical mounting (V1). If mounted vertically upwards (V3) the permissible axial forces are reduced by the force due to the weight of the rotor (F_G).

Space for your notes

3.7 Overview of LST servomotors



Technical data

Motor type	Motor type/ length	Stall torque M_0 [Nm]	Rated torque M_n [Nm]	Rated current at 560 V I_n [A]	Rated current at 320 V I_n [A]	Rated speed n_n [min^{-1}]
LST-037	LST-037-1	0.10	0.09	-	0.56	6000
	LST-037-2	0.20	0.18	-	0.92	6000
	LST-037-3	0.30	0.27	-	0.89	6000
LST-050	LST-050-1	0.20	0.19	-	0.60	4500
	LST-050-2	0.40	0.36	-	0.88	4500
	LST-050-3	0.60	0.55	-	1.18	4500
	LST-050-4	0.80	0.72	-	1.47	4500
	LST-050-5	0.95	0.85	-	1.71	4500
LST-074	LST-074-1	0.65	0.60	0.64	1.04	3000
	LST-074-2	1.30	1.15	0.95	1.58	3000
	LST-074-3	1.90	1.60	1.26	2.20	3000
	LST-074-4	2.50	2.20	1.62	2.70	3000
	LST-074-5	3.00	2.50	1.82	3.00	3000
LST-097	LST-097-1	2.60	2.30	1.85	3.00	3000
	LST-097-2	3.90	3.30	2.60	4.30	3000
	LST-097-3	5.30	4.60	3.80	5.90	3000
	LST-097-4	7.50	6.40	4.40	8.10	3000
	LST-097-5	9.50	8.50	6.20	10.5	3000
LST-127	LST-127-1	6.60	5.70	4.00	-	3000
	LST-127-2	10.5	8.80	6.30	-	3000
	LST-127-3	13.5	11.0	9.50	-	3000
	LST-127-4	17.0	14.5	10.0	-	3000
	LST-127-5	22.0	17.0	13.0	-	3000
LST-158	LST-158-1	13.5	13.0	8.20	-	3000
	LST-158-2	19.0	17.0	10.6	-	3000
	LST-158-3	22.0	19.0	12.3	-	3000
	LST-158-4	29.0	24.0	14.7	-	3000
	LST-158-5	35.0	26.0	18.2	-	3000
LST-190	LST-190-1	27.0	21.0	13.5	-	3000
	LST-190-2	32.0	23.0	15.0	-	3000
	LST-190-3	40.0	26.0	17.9	-	3000
LST-220	LST-220-1	40.0	30.0	17.8	-	3000
	LST-220-2	68.0	50.0	31.1	-	3000
	LST-220-3	93.0	60.0	34.9	-	3000
	LST-220-4	115.0	50.0	29.3	-	3000

Table 3.15 Technical data for the LST servomotor product range - All figures with a tolerance of ± 5%

3.8 Technical data LST-037 (U_{dc} = 320 VDC)



LST-037-1
037-2
037-3

NOTE:
Not approved for operation on DC link voltage U_{DC} = 560 VDC.

Technical data[1)]	Symbol	Unit	LST-037-1	LST-037-2	LST-037-3
Rated speed	n_n	min^{-1}		6000	
Rated frequency	f_N	Hz		300	
DC link voltage (controller)	U_{dc}	V		320	
Rated voltage	U_n	V	90	96	139
Rated torque	M_n	Nm	0.09	0.18	0.27
Rated current	I_n	A	0.56	0.92	0.89
Power	P	kW	0.056	0.11	0.17
Stall torque	M_0	Nm	0.10	0.20	0.30
Stall current	I_0	A	0.58	0.97	0.95
Maximum permissible torque	M_{max}	Nm	0.40	0.80	1.20
Maximum permissible current	I_{max}	A	2.5	4.2	4.1
Maximum permissible speed	n_{max}	min^{-1}		12000	
EMF constant	K_E	V/1000 min^{-1}	10.5	12.5	19.0
Torque constant	K_T	Nm/A	0.17	0.21	0.31
Winding resistance (2 phases)	R_{2ph}	Ω	38.9	18.9	22.9
Winding inductance (2 phases)	L_{2ph}	mH	6.5	4.5	6.5
No load speed	n_0	min^{-1}	19050	16000	10460
Electrical time constant	T_{el}	ms	0.17	0.24	0.28
Thermal time constant	T_{th}	min	18	20	20
Moment of inertia of rotor	J	$kgcm^2$	0.06	0.08	0.08
Mass	m	kg	0.37	0.45	0.45
Brake (optional)					
Rated voltage	U_N	V		24 ± 10%	
Rated current at 20 °C for releasing	I_N	A		0.33	
Permissible maximum speed	n_{max}	min^{-1}		10,000	
Permissible friction work	W_R	Ws		0.20×10^6	
Moment of inertia	J_B	$kgcm^2$		0.013	
Mass	m	kg		0.075	
Braking torque	M_H	Nm		0.4	

1) All figures with a tolerance of ± 10%.

3.8.1 Dimensional sketch LST-037

Rotary encoder option	Length [mm]	LST-037-1	LST-037-2	LST-037-3
1R	L (L + brake)	81 (111)	96 (126)	111 (141)

Table 3.16 Overview of the motor lengths – for overview of the encoder types see chapter 5.1; all data in [mm]

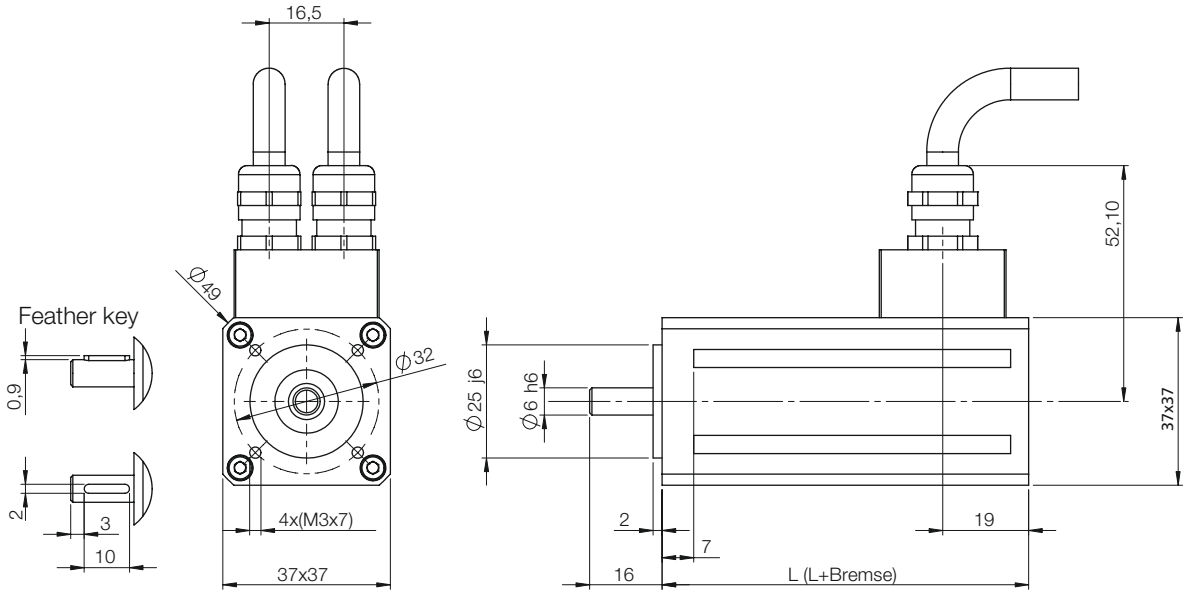

3.8.2 Characteristics LST-037

Explanation of the characteristics:

The characteristic M_{max} describes the maximum torque possible for a short time at the related speed. It is important for dynamic processes.
The characteristic M_n shows the thermally permissible rated torque.
The characteristics are limited by the related maximum permissible speed n_{max} (for n_{max} see the table "Technical data").

LST-037-1-60-320

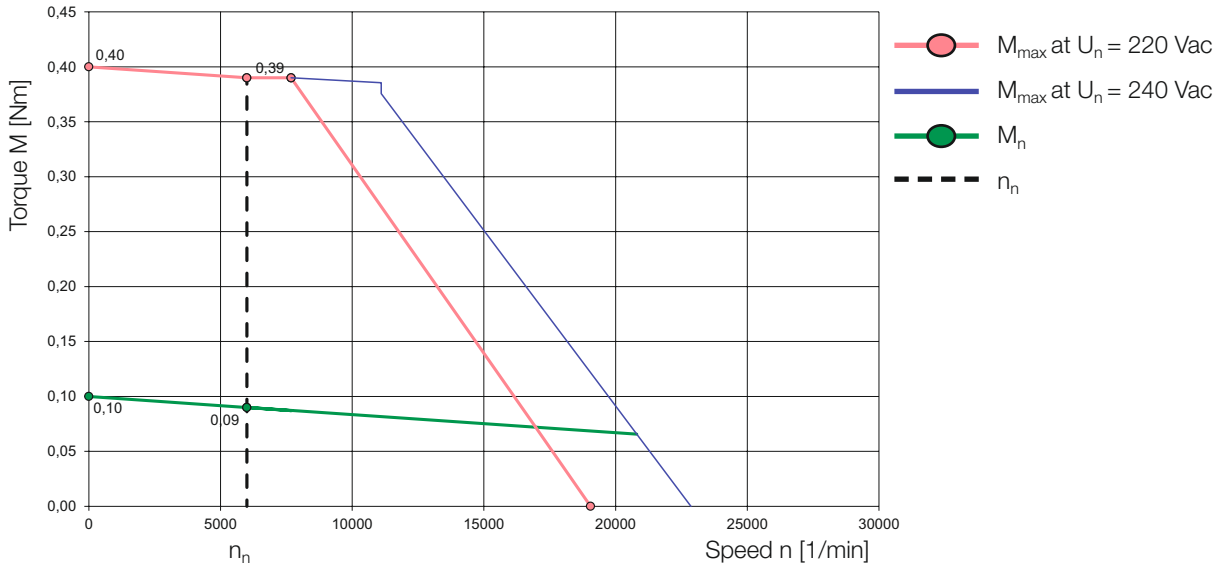

LST-037-2-60-320

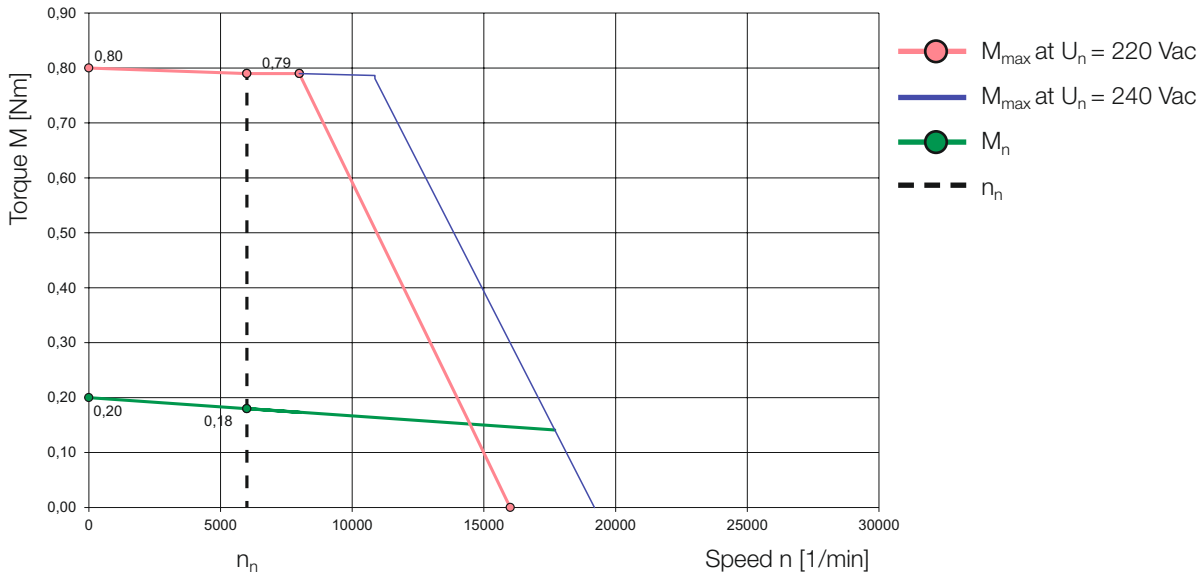

LST-037-3-60-320

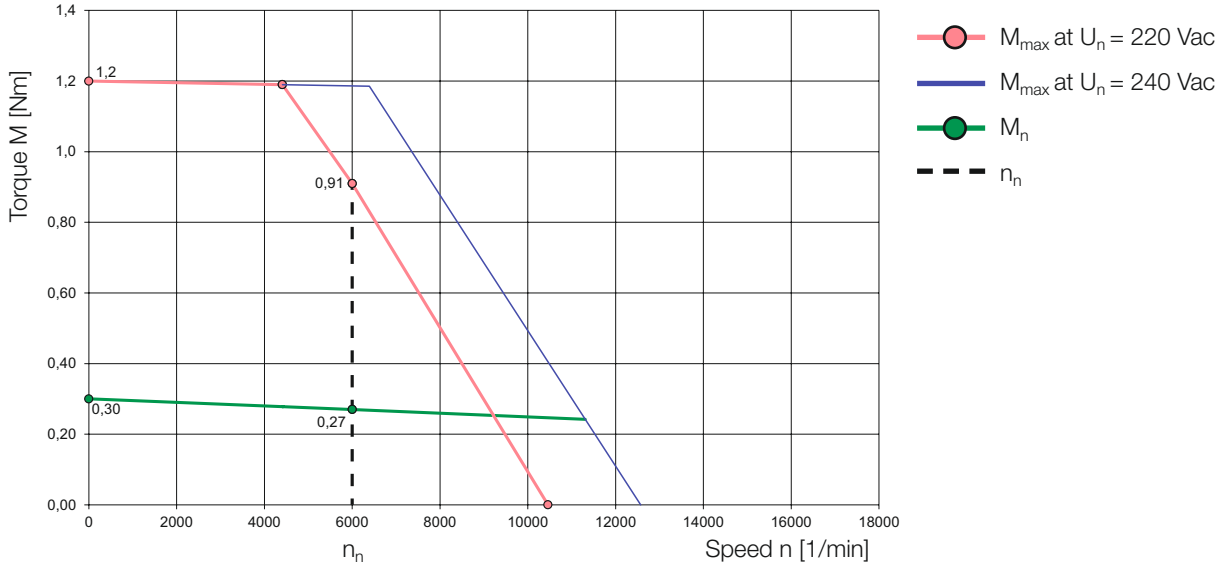

3.9 Technical data LST-050 (U_{dc} = 320 VDC)



LST-050-1
050-2
050-3
050-4
050-5

NOTE:
Not approved for operation on DC link voltage U_{DC} = 560 VDC.

Technical data[1)]	Symbol	Unit	LST-050-1	LST-050-2	LST-050-3	LST-050-4	LST-050-5
Rated speed	n_n	min^{-1}	4500				
Rated frequency	f_N	Hz	225				
DC link voltage (controller)	U_{dc}	V	320				
Rated voltage	U_n	V	134	147	163	168	166
Rated torque	M_n	Nm	0.19	0.36	0.55	0.72	0.85
Rated current	I_n	A	0.60	0.88	1.18	1.47	1.71
Power	P	kW	0.089	0.17	0.26	0.34	0.44
Stall torque	M_0	Nm	0.20	0.40	0.60	0.80	0.95
Stall current	I_0	A	0.59	0.93	1.23	1.56	1.82
Maximum permissible torque	M_{max}	Nm	0.80	1.6	2.4	3.2	3.8
Maximum permissible current	I_{max}	A	2.5	4.0	5.3	6.7	7.8
Maximum permissible speed	n_{max}	min^{-1}	12000				
EMF constant	K_E	V/1000 min^{-1}	20.5	26.0	29.5	31.0	31.5
Torque constant	K_T	Nm/A	0.34	0.43	0.49	0.51	0.52
Winding resistance (2 phases)	R_{2ph}	Ω	54	26.3	19.9	14.6	10.7
Winding inductance (2 phases)	L_{2ph}	mH	32	21.4	17.2	14.4	11.3
No load speed	n_0	min^{-1}	9760	7690	6780	6450	6350
Electrical time constant	T_{el}	ms	0.59	0.82	0.87	0.98	1.1
Thermal time constant	T_{th}	min	10	15	20	22	27
Moment of inertia of rotor	J	$kgcm^2$	0.06	0.08	0.11	0.13	0.18
Mass	m	kg	0.90	1.06	1.21	1.36	1.52
Brake (optional)							
Rated voltage	U_N	V	24 ± 10%				
Rated current at 20 °C for releasing	I_N	A	0.46				
Permissible maximum speed	n_{max}	min^{-1}	10,000				
Permissible friction work	W_R	Ws	0.41×10^6				
Moment of inertia	J_B	$kgcm^2$	0.07				

1) All figures with a tolerance of ± 10%.

Technical data[1)]	Symbol	Unit	LST-050-1	LST-050-2	LST-050-3	LST-050-4	LST-050-5
Mass	m	kg	0.15				
Braking torque	M_H	Nm	2.0				

1) All figures with a tolerance of ± 10%.

3.9.1 Dimensional sketch LST-050

Rotary encoder option	Length [mm]	LST-050-1	LST-050-2	LST-050-3	LST-050-4	LST-050-5
1R/3R	L (L + brake)	98 (131)	113 (146)	128 (161)	143 (176)	158 (191)
G6.2x + G7.2x	L (L + brake)	109 (142)	124 (157)	139 (172)	154 (187)	169 (202)

Table 3.17 Overview of the motor lengths – for overview of the encoder types see chapter 5.1; all data in [mm]

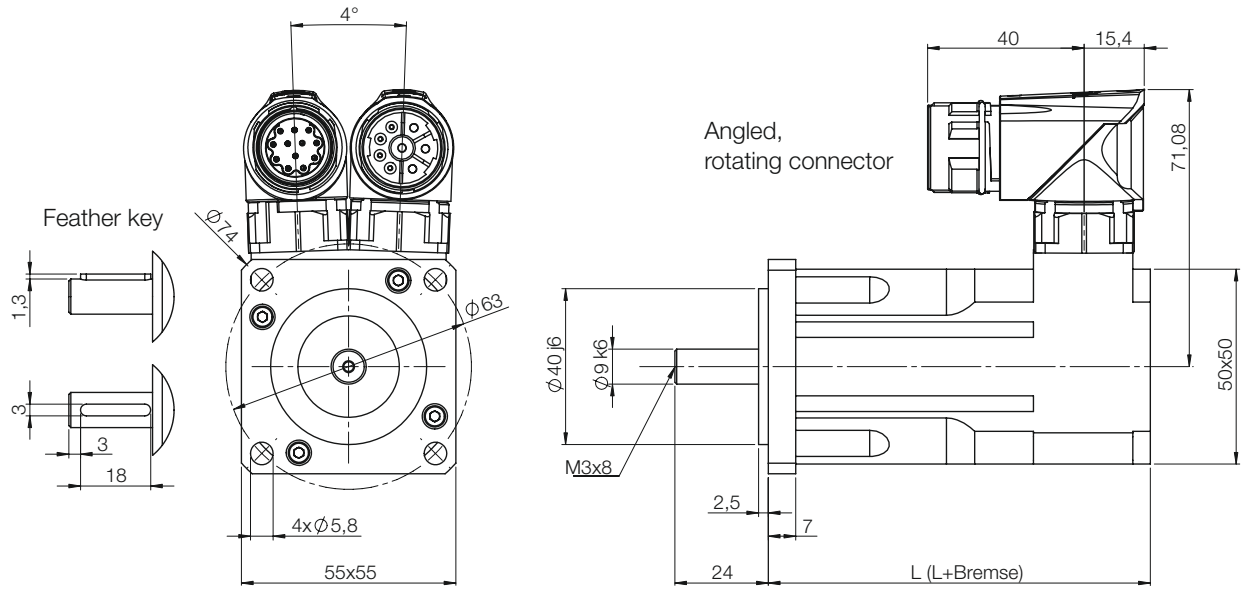

3.9.2 Characteristics LST-050

Explanation of the characteristics:

The characteristic M_{max} describes the maximum torque possible for a short time at the related speed. It is important for dynamic processes.
The characteristic M_n shows the thermally permissible rated torque.
The characteristics are limited by the related maximum permissible speed n_{max} (for n_{max} see the table "Technical data").

LST-050-1-45-320

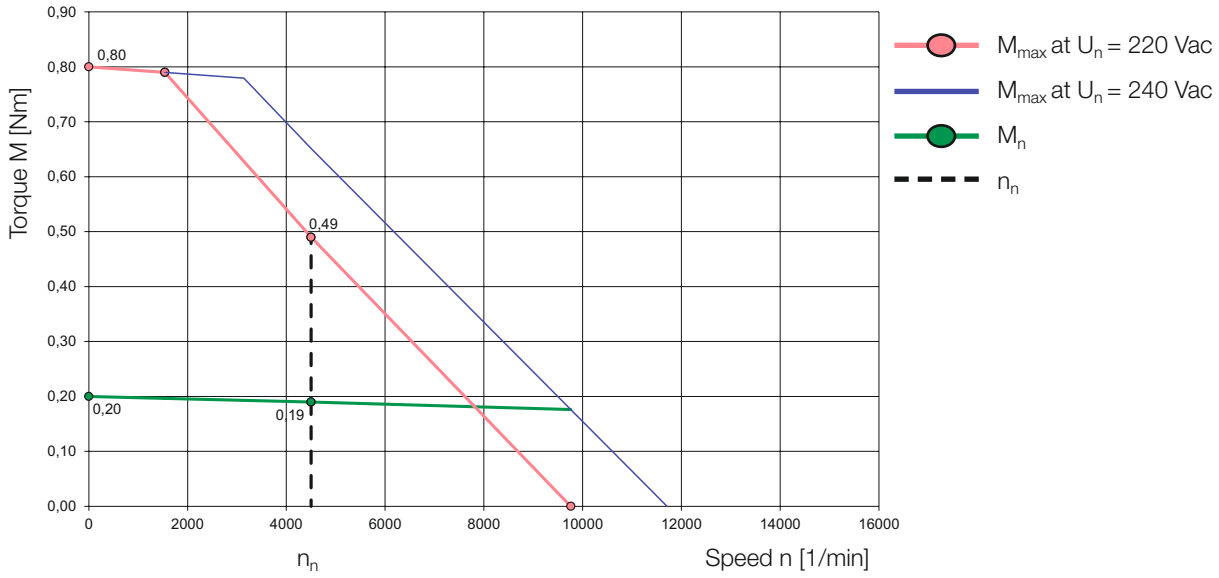

LST-050-2-45-320

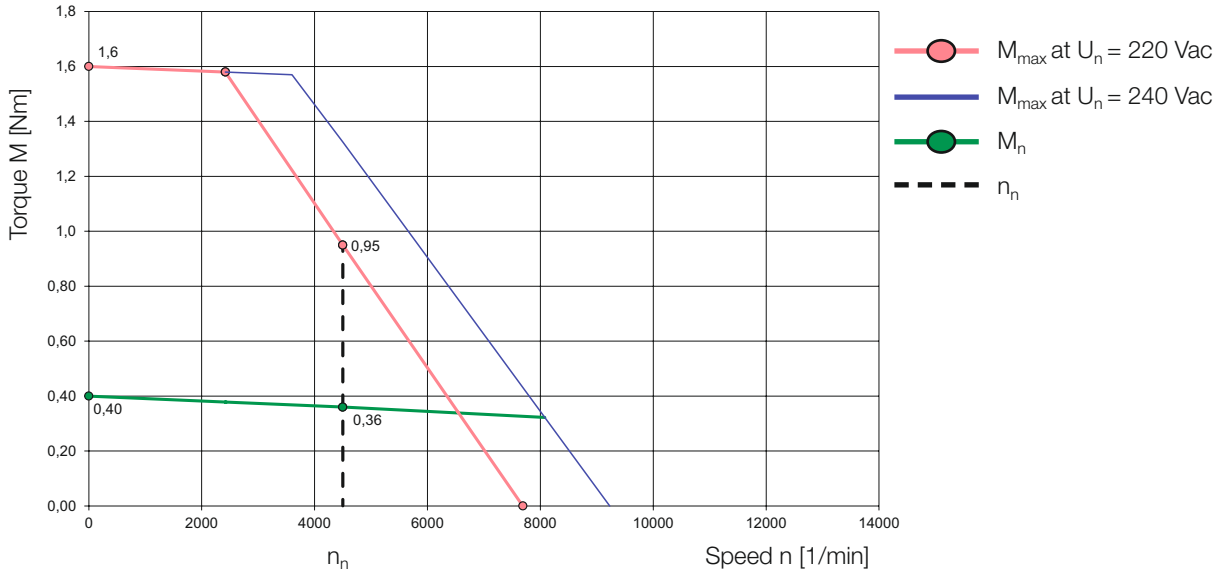

LST-050-3-45-320

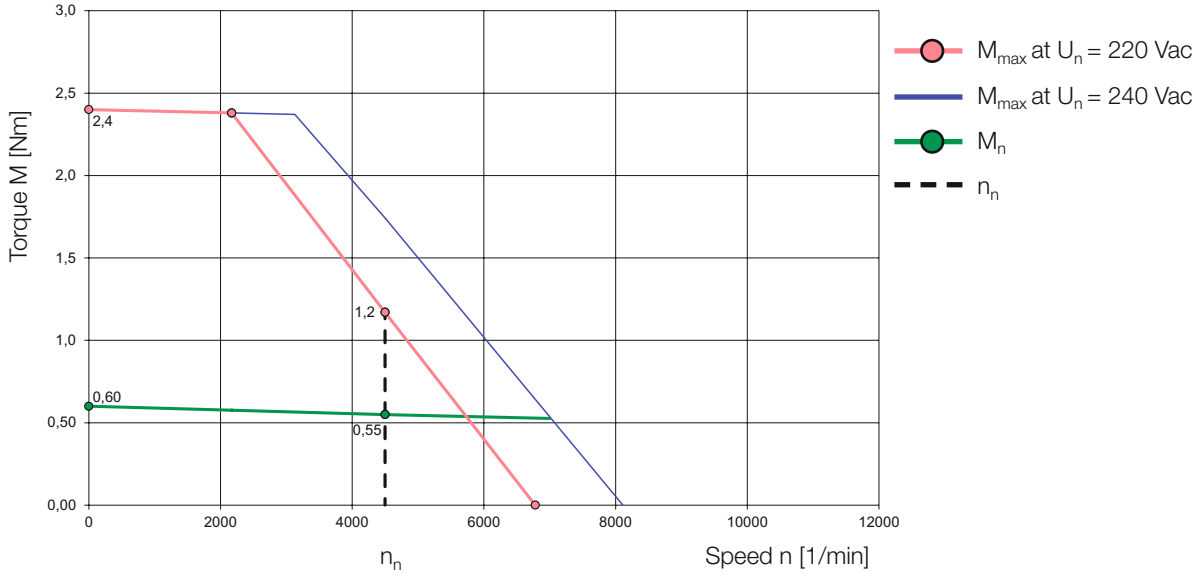

LST-050-4-45-320

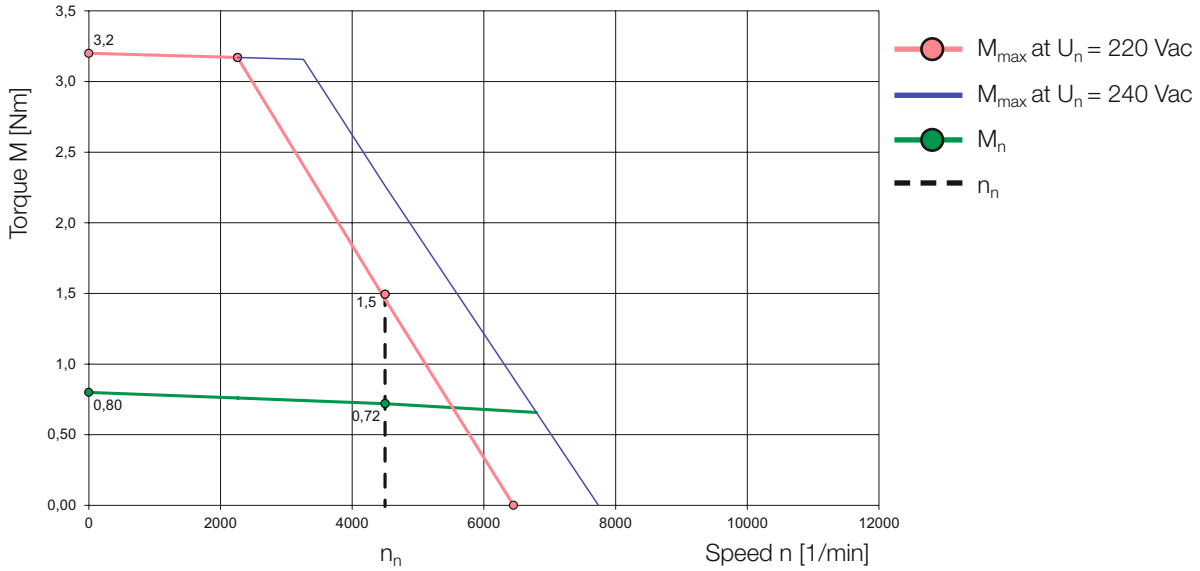

LST-050-5-45-320

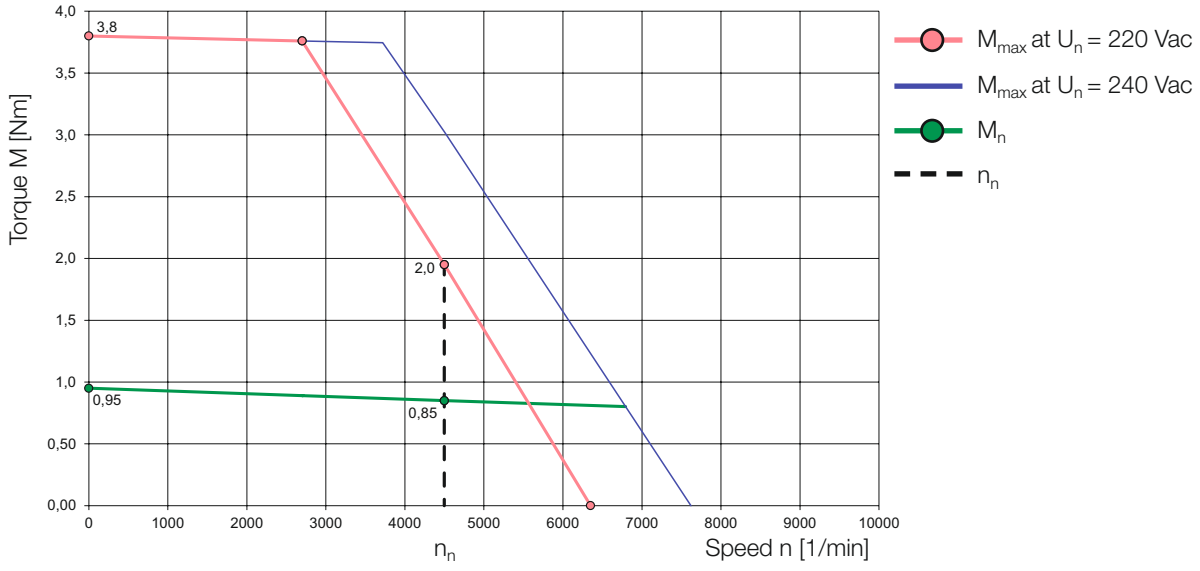

3.10 Technical data LST-074 (U_{dc} = 320 + 560 VDC)

LST-074-1
074-2
074-3
074-4
074-5



Technical data[1)]	Symbol	Unit	LST-074-1	LST-074-2	LST-074-3	LST-074-4	LST-074-5
Rated speed	n_n	min^{-1}	3000				
Rated frequency	f_N	Hz	150				
DC link voltage (controller)	U_{dc}	V	320 / 560				
Rated voltage	U_n	V	87 / 152	168 / 279	158 / 279	170 /286	173 / 290
Rated torque	M_n	Nm	0.60	1.15	1.6	2.2	2.5
Rated current	I_n	A	1.04 / 0.64	1.58 / 0.95	2.2 / 1.26	2.7 / 1.62	3.0 / 1.82
Power	P	kW	0.18	0.36	0.5	0.69	0.78
Stall torque	M_0	Nm	0.65	1.3	1.9	2.5	3.0
Stall current	I_0	A	1.06 / 0.65	1.67 / 1.01	2.5 / 1.42	3.0 / 1.8	3.5 / 2.1
Maximum permissible torque	M_{max}	Nm	2.6	5.2	7.6	10.0	12.0
Maximum permissible current	I_{max}	A	4.6 / 2.8	7.2 / 4.3	10.7 / 6.1	13.0 / 7.7	15.0 / 9.0
Maximum permissible speed	n_{max}	min^{-1}	12000				
EMF constant	K_E	V/1000 min^{-1}	37.0 / 60.0	47.0 / 46.0	46.0 / 81.0	50.0 / 84.0	52.0 / 87.0
Torque constant	K_T	Nm/A	0.61 / 0.99	0.78 / 0.78	0.76 / 1.24	0.83 / 1.39	0.86 / 1.44
Winding resistance (2 phases)	R_{2ph}	Ω	28.2 / 75.0	12.7 / 34.5	6.7 / 20.9	5.4 / 15.0	4.1 / 11.6
Winding inductance (2 phases)	L_{2ph}	mH	33.3 / 88.0	21.5 / 62.0	13.1 / 40.4	11.7 / 33.2	9.4 / 26.7
No load speed	n_0	min^{-1}	5410 / 5500	4260 / 4230	4350 / 4070	4000 / 3930	3850 / 3790
Electrical time constant	T_{el}	ms	1.2	1.7 /	2.0 /	2.2 /	2.3 /
Thermal time constant	T_{th}	min	25	30	31	32	33
Moment of inertia of rotor	J	$kgcm^2$	0.5	0.65	0.92	1.4	1.5
Mass	m	kg	1.75	2.25	2.7	3.2	3.65
Brake (optional)							
Rated voltage	U_N	V	24 ± 10%				
Rated current at 20 °C for releasing	I_N	A	0.5				
Permissible maximum speed	n_{max}	min^{-1}	10,000				
Permissible friction work	W_R	Ws	0.58×10^6				
Moment of inertia	J_B	$kgcm^2$	0.18				

1) All figures with a tolerance of ± 10%.

Technical data[1)]	Symbol	Unit	LST-074-1	LST-074-2	LST-074-3	LST-074-4	LST-074-5
Mass	m	kg	0.3				
Braking torque	M_H	Nm	4.5				

1) All figures with a tolerance of ± 10%.

3.10.1 Dimensional sketch LST-074

Rotary encoder option	Length [mm]	LST-074-1	LST-074-2	LST-074-3	LST-074-4	LST-074-5
1R/3R	L (L + brake)	109 (142)	127 (160)	145 (178)	163 (196)	181 (214)
G3 + G5	L (L + brake)	150 (183)	168 (201)	186(219)	204 (237)	222 (255)
G6.1x	L (L + brake)	128.5 (161.5)	146.5 (179.5)	164.5 (197.5)	182.5 (215.5)	200.5 (233.5)
G6.2x + G7.2x	L (L + brake)	126 (159)	144 (177)	162 (195)	180 (213)	189 (234)
G12.1x	L (L + brake)	150 (183)	168 (201)	186 (219)	204 (237)	222 (255)

Table 3.18 Overview of the motor lengths – for overview of the encoder types see chapter 5.1; all data in [mm]

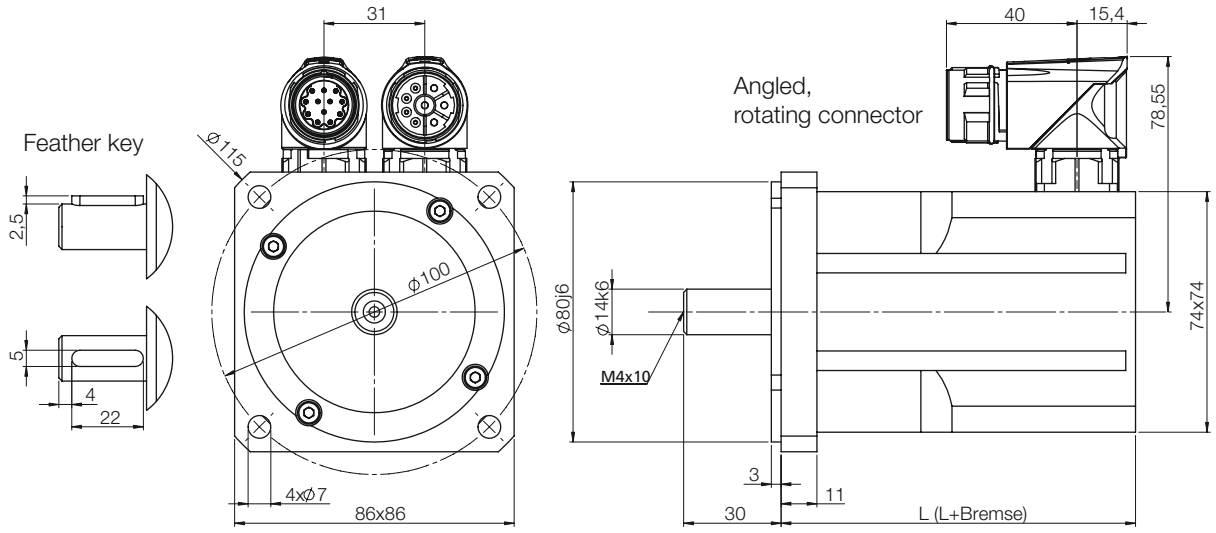

3.10.2 Characteristics LST-074

Explanation of the characteristics:

The characteristic M_{max} describes the maximum torque possible for a short time at the related speed. It is important for dynamic processes.
The characteristic M_n shows the thermally permissible rated torque.
The characteristics are limited by the related maximum permissible speed n_{max} (for n_{max} see the table "Technical data").

LST-074-1-30-320

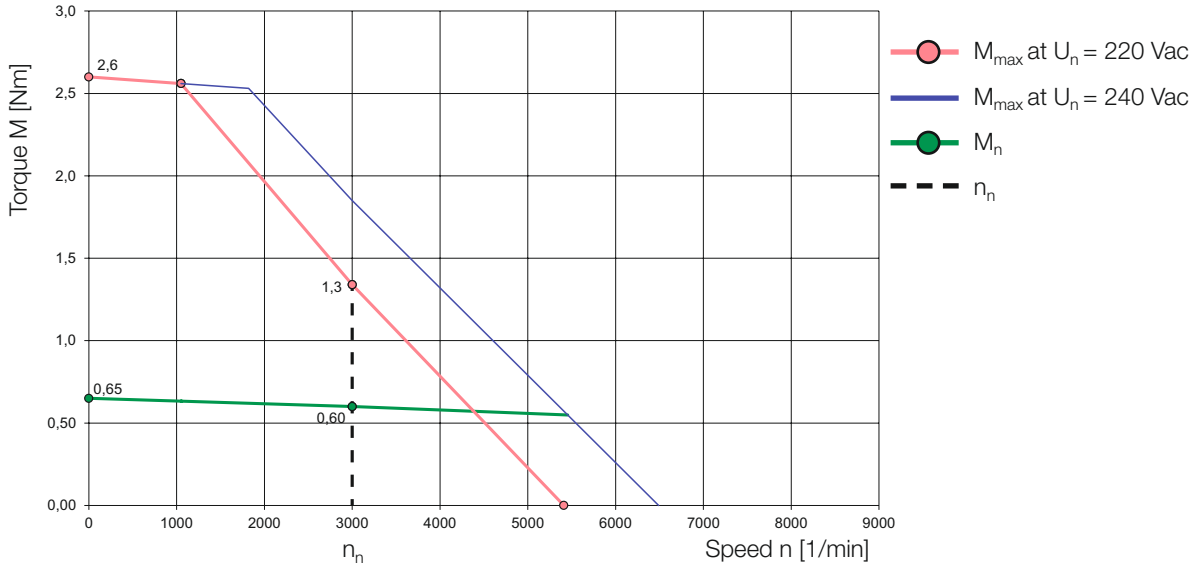

LST-074-2-30-320

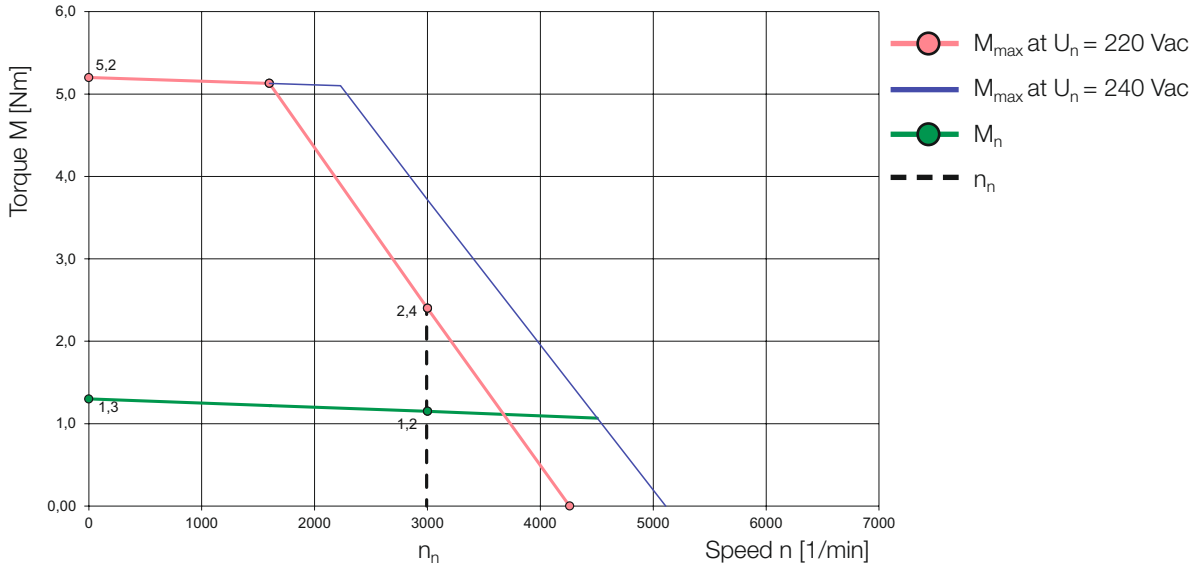

LST-074-3-30-320

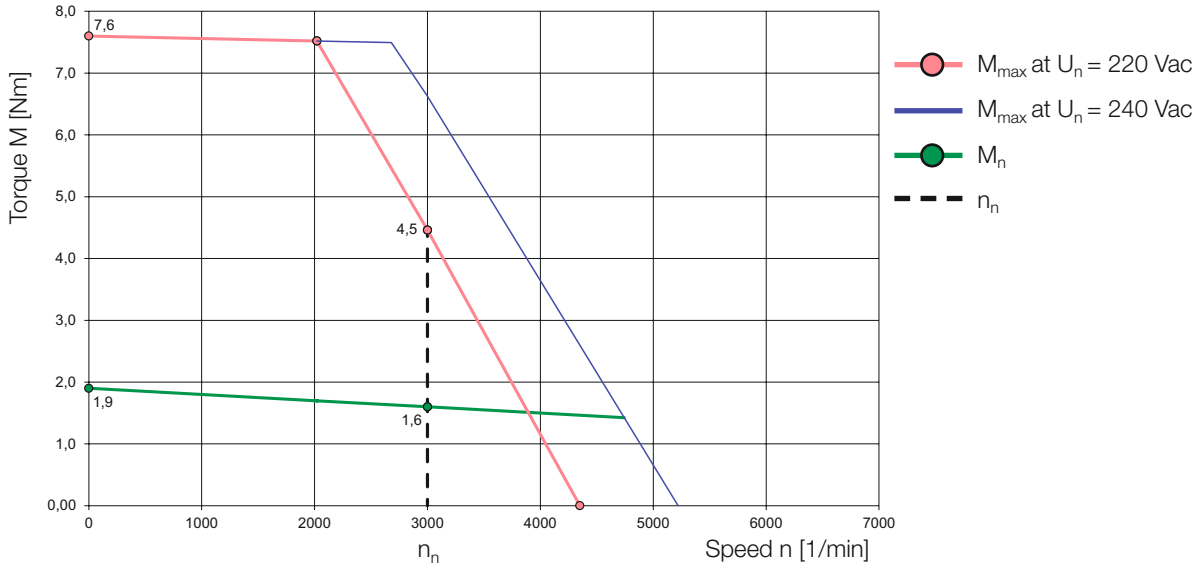

LST-074-4-30-320

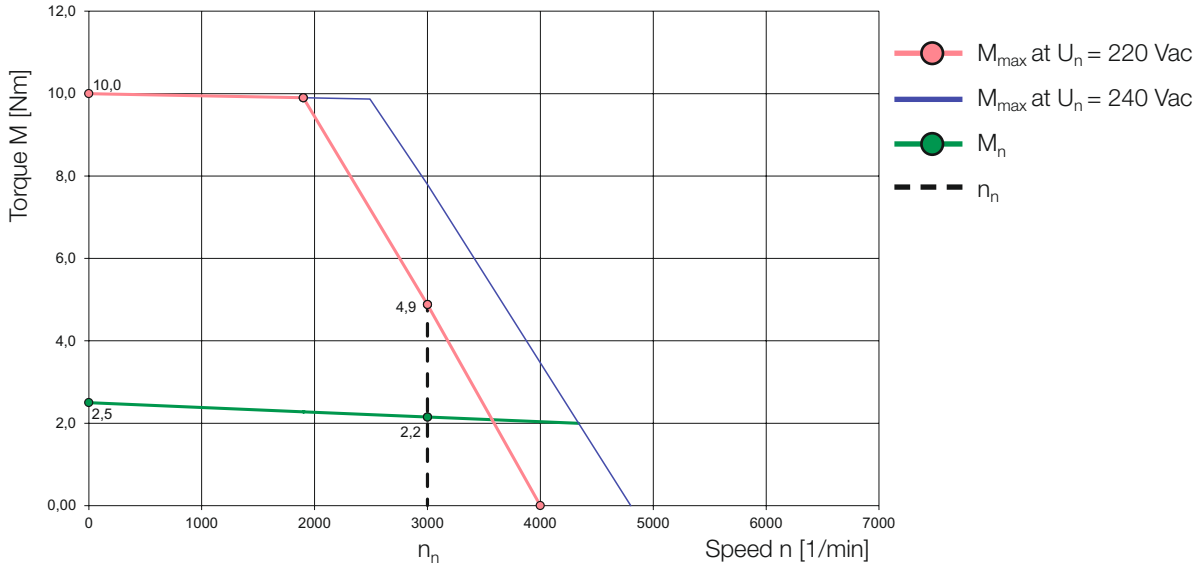

LST-074-5-30-320

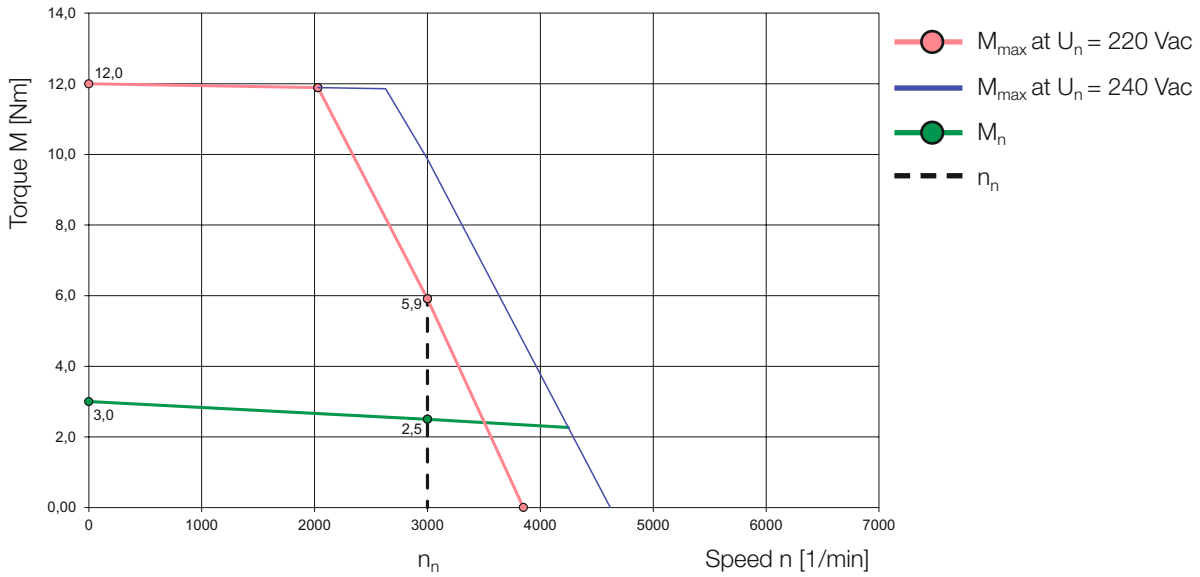

LST-074-1-30-560

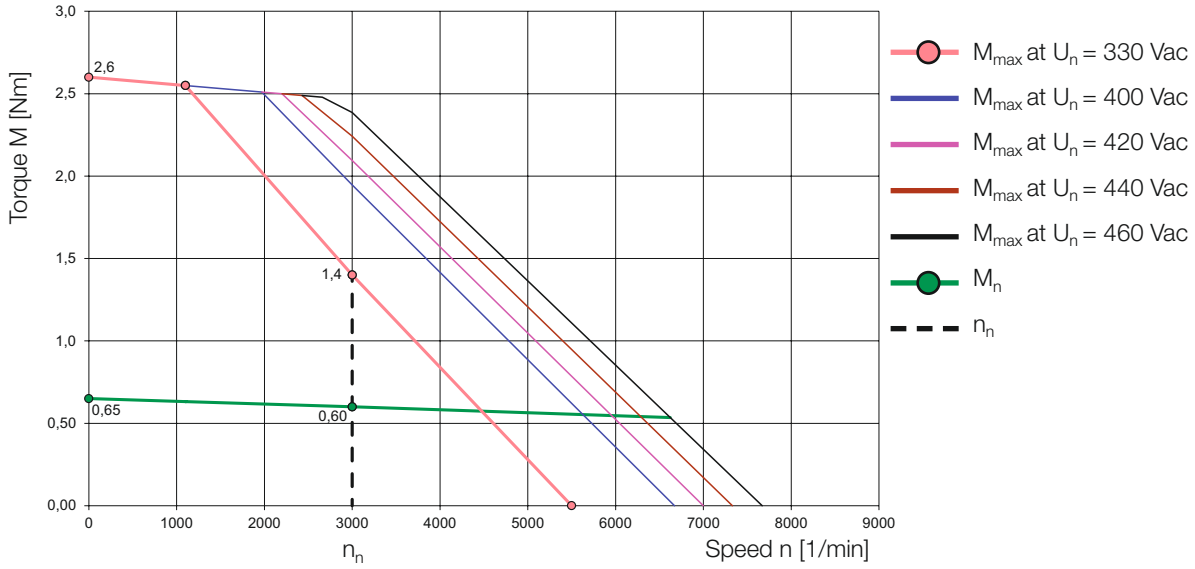

LST-074-2-30-560

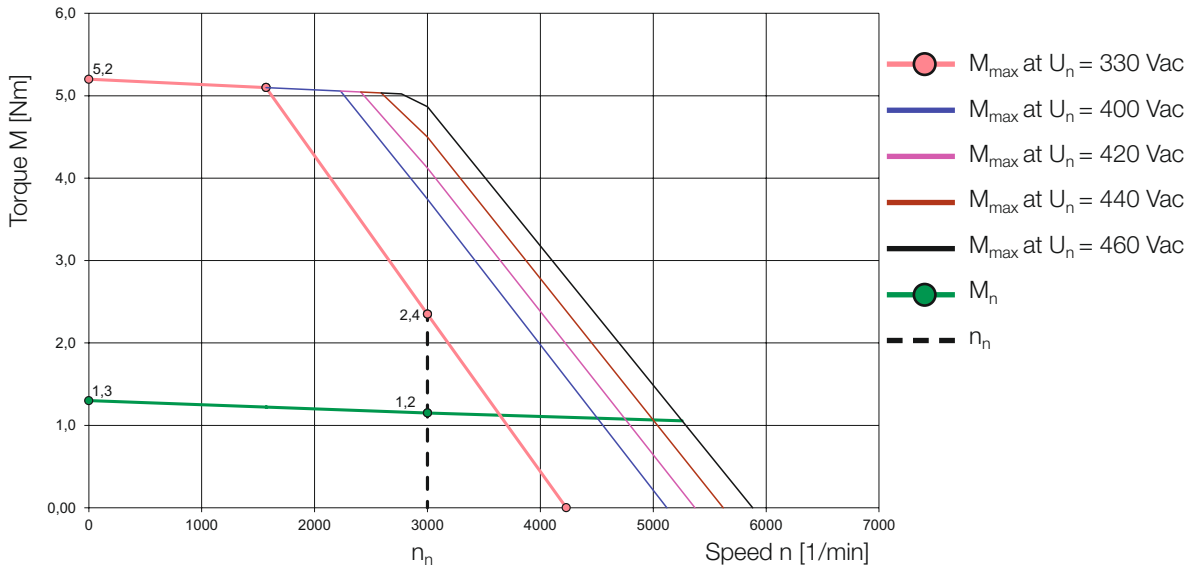

LST-074-3-30-560

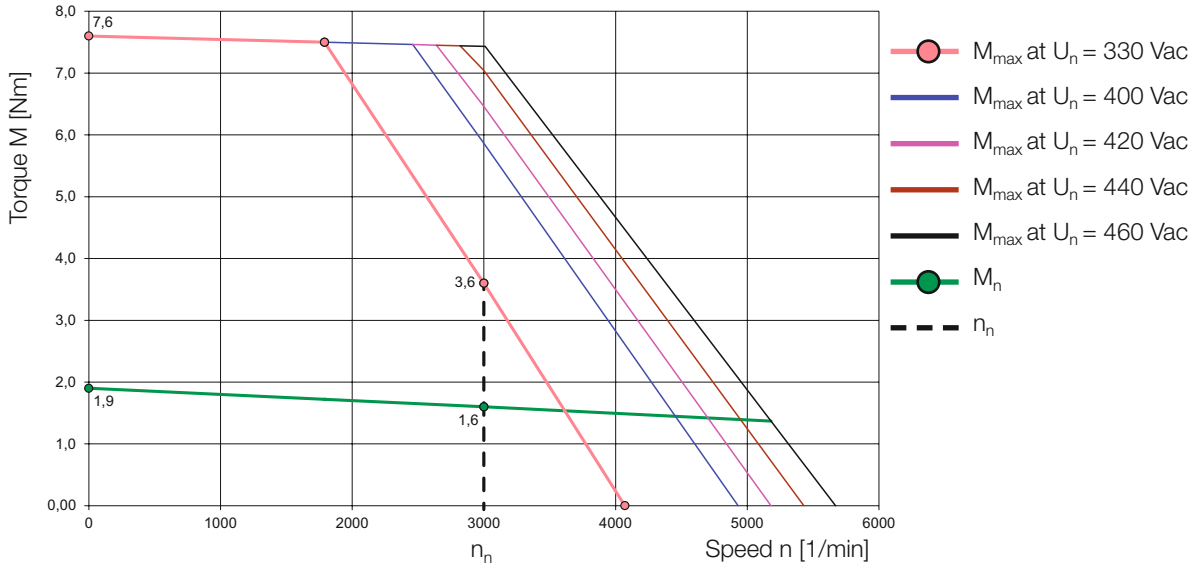

LST-074-4-30-560

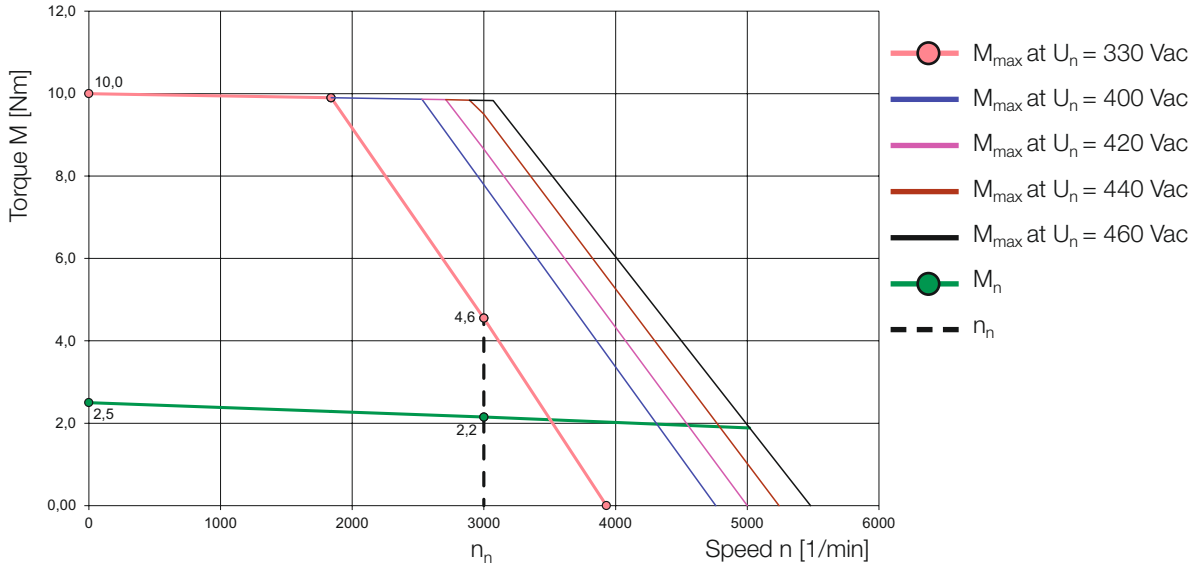

LST-074-5-30-560

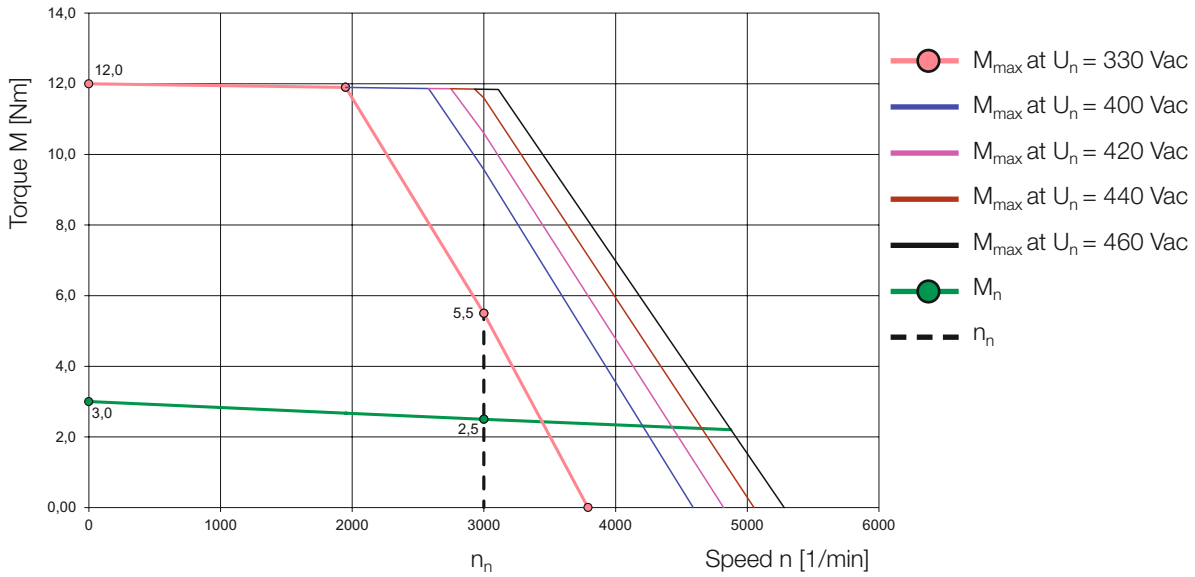

3.11 Technical data LST-097 (U_{dc} = 320 + 560 VDC)



LST-097-1
097-2
097-3
097-4
097-5

Technical data[1)]	Symbol	Unit	LST-097-1	LST-097-2	LST-097-3	LST-097-4	LST-097-5
Rated speed	n_n	min^{-1}	3000				
Rated frequency	f_N	Hz	150				
DC link voltage (controller)	U_{dc}	V	320 / 560				
Rated voltage	U_n	V	135 / 229	166 / 314	169 / 267	164 / 308	165 / 308
Rated torque	M_n	Nm	2.3	3.3	4.6	6.4	8.5
Rated current	I_n	A	3.0 / 1.85	4.3 / 2.6	5.9 / 3.8	8.1 / 4.4	10.5 / 6.2
Power	P	kW	0.72	1.0	1.44	2.0	2.67
Stall torque	M_0	Nm	2.6	3.9	5.3	7.5	9.5
Stall current	I_0	A	3.1 / 1.92	4.8 / 2.9	6.5 / 4.1	9.1 / 4.8	11.3 / 6.6
Maximum permissible torque	M_{max}	Nm	10.4	15.6	21.0	30.0	38.0
Maximum permissible current	I_{max}	A	18.9 / 11.5	29.0 / 17.3	39.0 / 25	54.0 / 29.0	68.0 / 40.0
Maximum permissible speed	n_{max}	min^{-1}	12000				
EMF constant	K_E	V/1000 min^{-1}	50.0 / 82.0	49.0 / 82.0	49.5 / 78.0	50.0 / 94.0	51.0 / 87.0
Torque constant	K_T	Nm/A	0.83 / 1.36	0.81 / 1.36	0.82 / 1.29	0.83 / 1.55	0.84 / 1.44
Winding resistance (2 phases)	R_{2ph}	Ω	3.6 / 9.6	2.3 / 6.3	1.66 / 4.2	0.87 / 3.0	0.59 / 1.65
Winding inductance (2 phases)	L_{2ph}	mH	15.9 / 41.5	11.8 / 33.1	9.8 / 24.0	5.6 / 19.2	4.1 / 11.7
No load speed	n_0	min^{-1}	4000 / 4020	4080 / 4020	4040 / 4230	4000 / 3510	3920 / 3790
Electrical time constant	T_{el}	ms	4.4 / 4.3	5.2 / 5.3	5.9 / 5.7	6.4 / 6.4	6.9 / 7.1
Thermal time constant	T_{th}	min	60	65	64	66	68
Moment of inertia of rotor	J	$kgcm^2$	1.9	2.3	2.7	4.2	6.1
Mass	m	kg	4.5	5.05	5.6	7.7	10.5
Brake (optional)							
Rated voltage	U_N	V	24 ± 10%				
Rated current at 20 °C for releasing	I_N	A	0.75				
Permissible maximum speed	n_{max}	min^{-1}	10,000				
Permissible friction work	W_R	Ws	0.89×10^6				

1) All figures with a tolerance of ± 10%.

Technical data[1)]	Symbol	Unit	LST-097-1	LST-097-2	LST-097-3	LST-097-4	LST-097-5
Moment of inertia	J_B	kgcm²	0.54				
Mass	m	kg	0.46				
Braking torque	M_H	Nm	9.0				

1) All figures with a tolerance of ± 10%.

3.11.1 Dimensional sketch LST-097

Rotary encoder option	Length [mm]	LST-097-1	LST-097-2	LST-097-3	LST-097-4	LST-097-5
1R/3R	L (L + brake)	146 (178)	161 (193)	176 (208)	221 (253)	276 (308)
G3 + G5	L (L + brake)	183 (215)	198 (230)	213 (245)	258 (290)	313 (345)
G6.1x	L (L + brake)	167 (199)	182 (214)	197 (229)	242 (274)	297/(329)
G6.2x + G7.2x	L (L + brake)	165 (197)	(212)	195 (227)	240 (272)	(327)
G12.1x	L (L + brake)	183 (215)	198 (230)	213 (245)	258 (290)	313 (345)

Table 3.19 Overview of the motor lengths – for overview of the encoder types see chapter 5.1; all data in [mm]

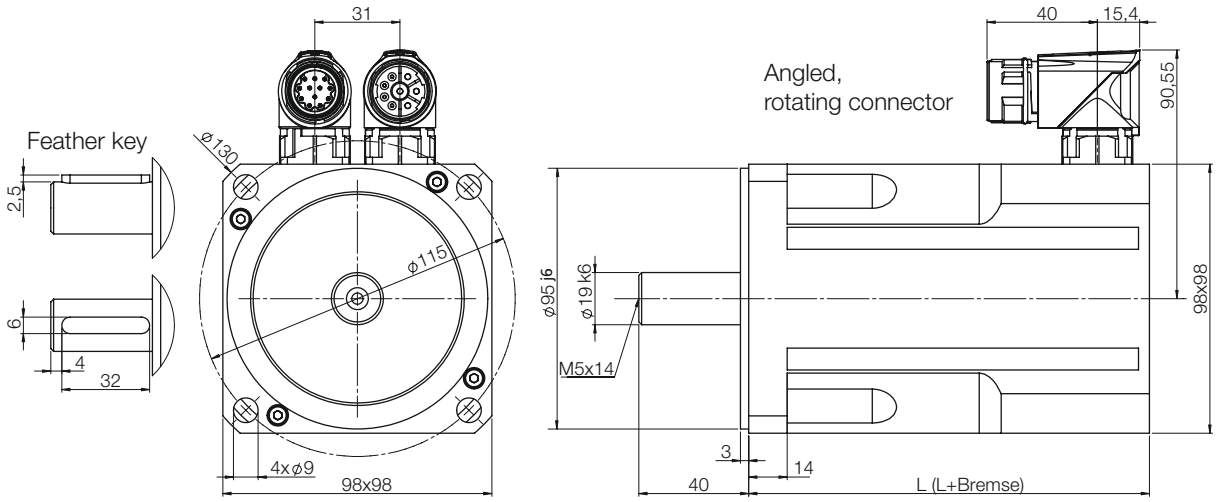

3.11.2 Characteristics LST-097

Explanation of the characteristics:

The characteristic M_{max} describes the maximum torque possible for a short time at the related speed. It is important for dynamic processes.
The characteristic M_n shows the thermally permissible rated torque.
The characteristics are limited by the related maximum permissible speed n_{max} (for n_{max} see the table "Technical data").

LST-097-1-30-320

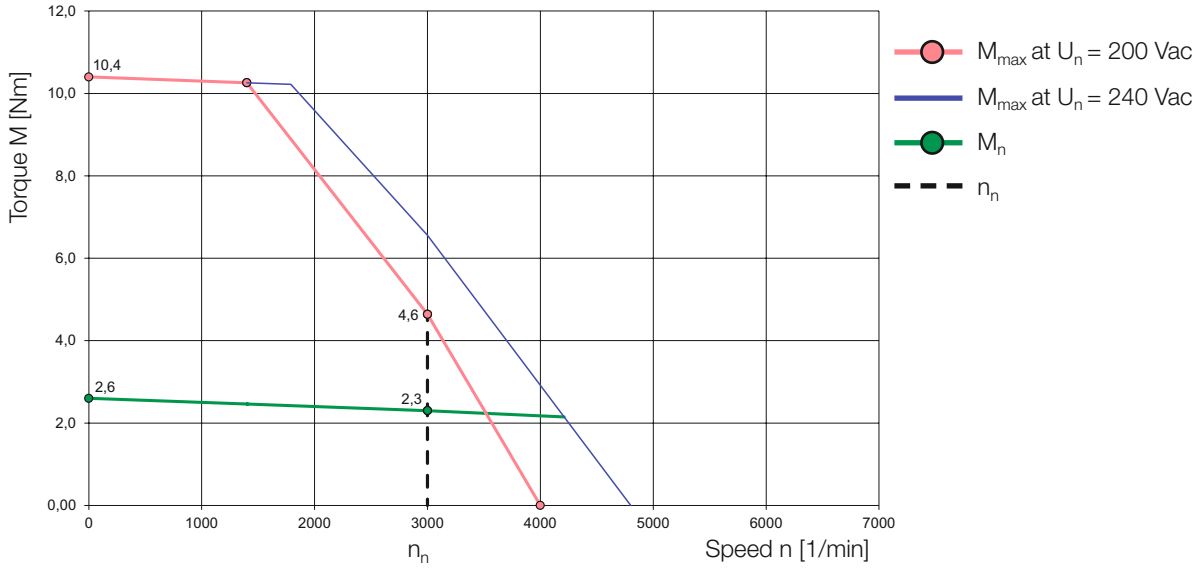

LST-097-2-30-320

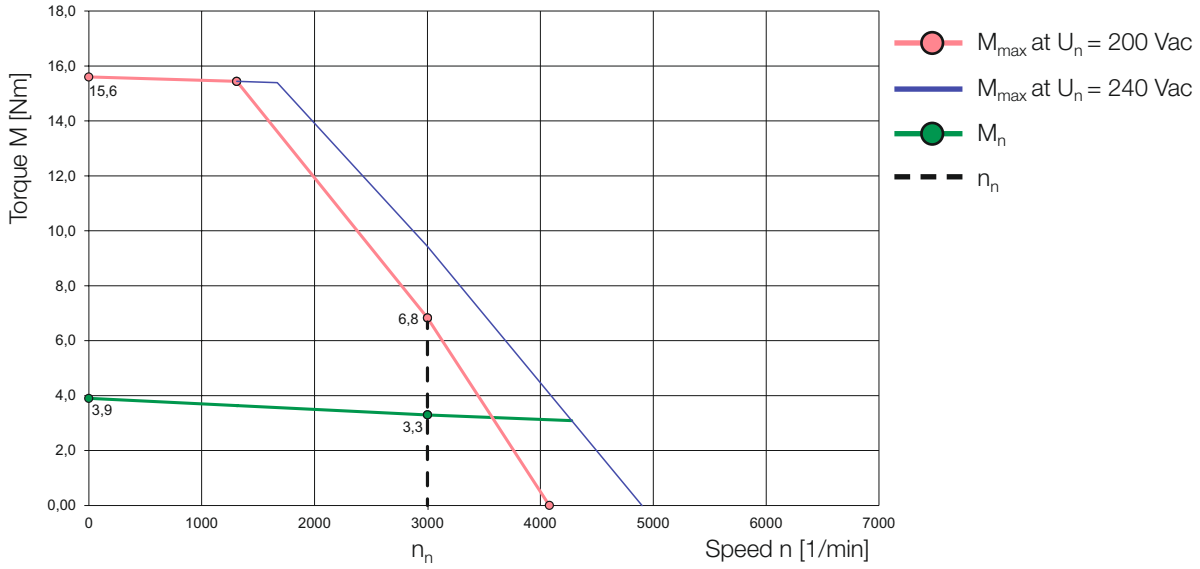

LST-097-3-30-320

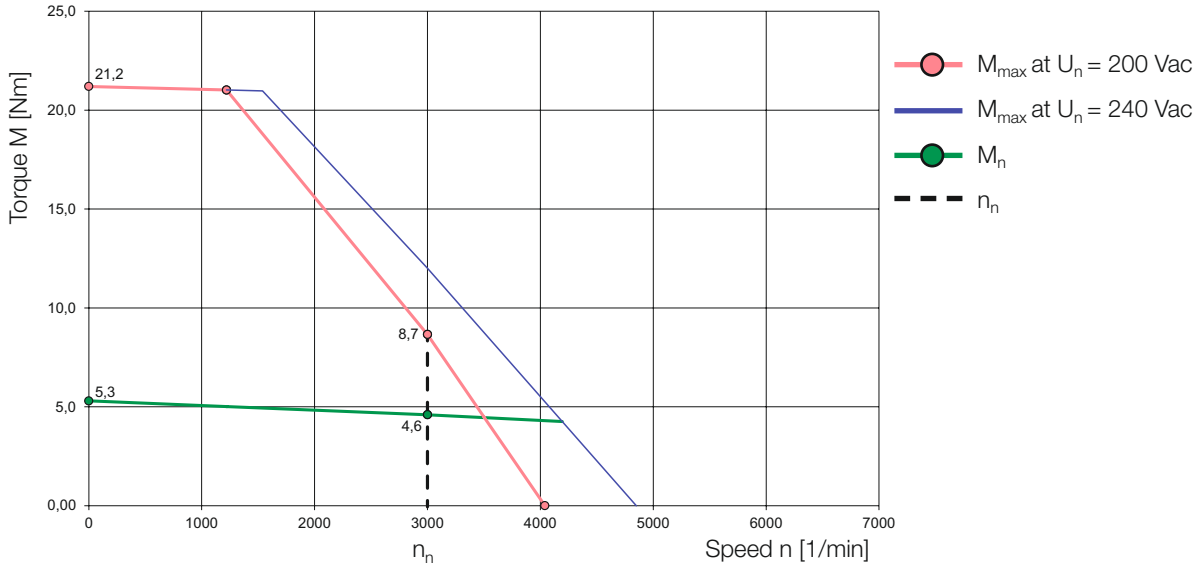

LST-097-4-30-320

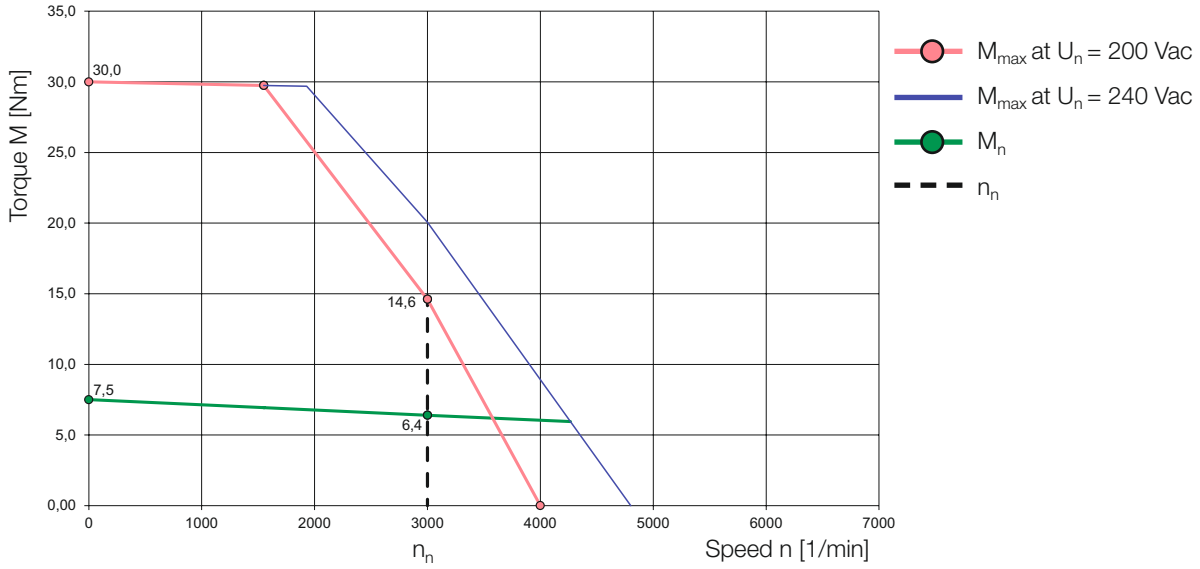

LST-097-5-30-320

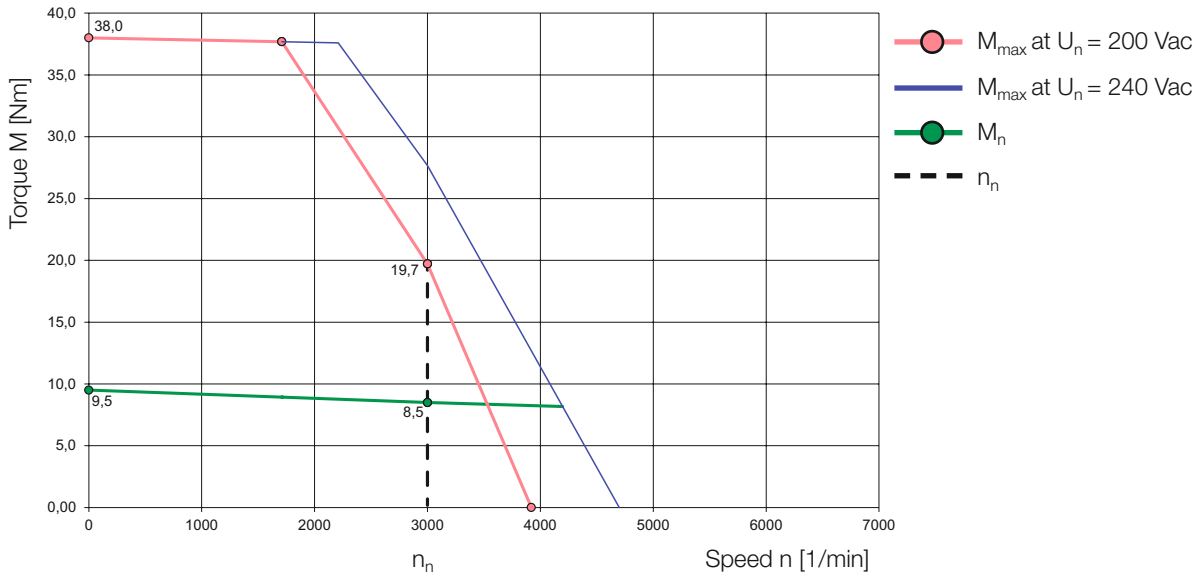

LST-097-1-30-560

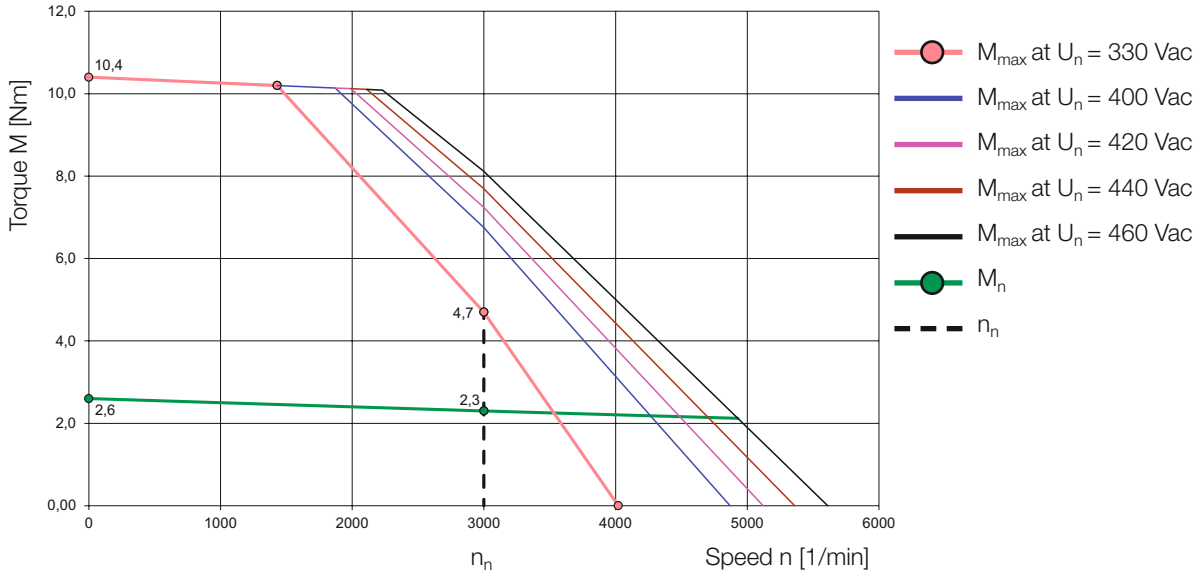

LST-097-2-30-560

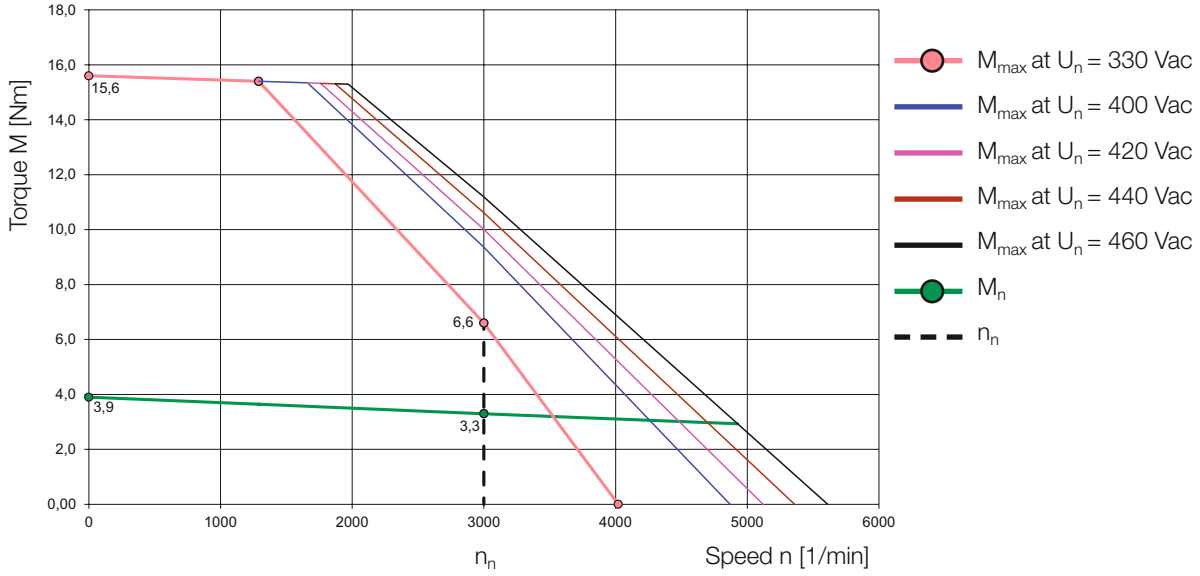

LST-097-3-30-560

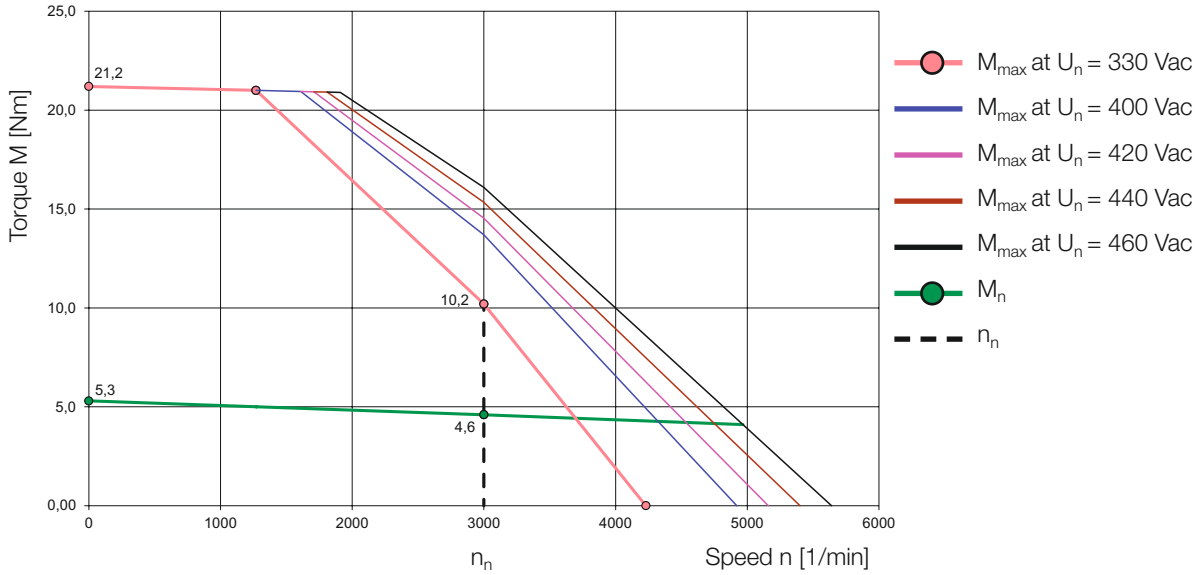

LST-097-4-30-560

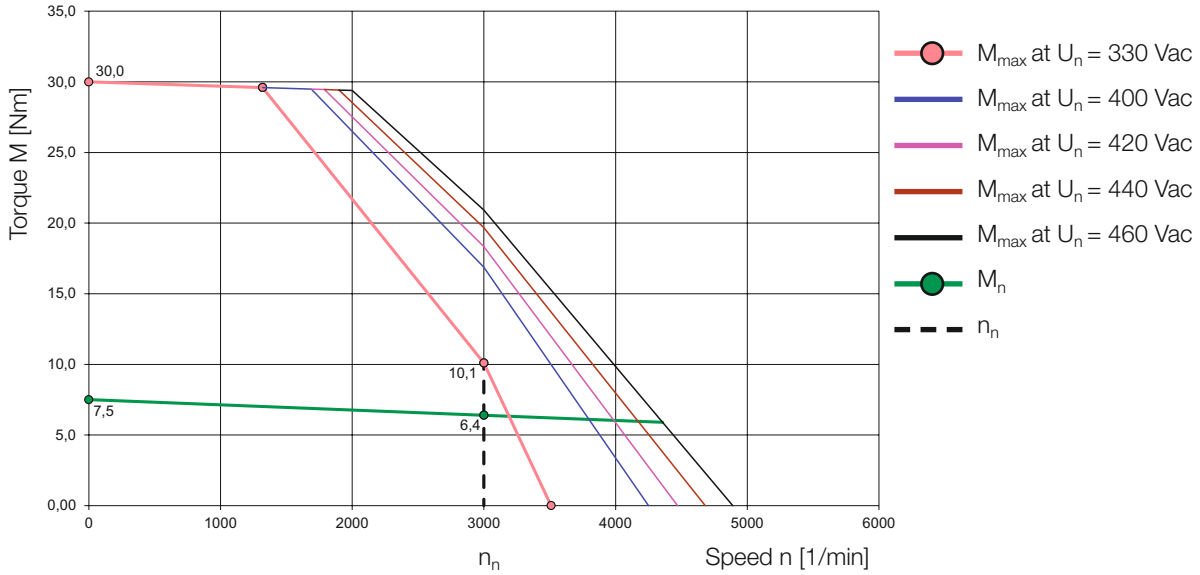

LST-097-5-30-560

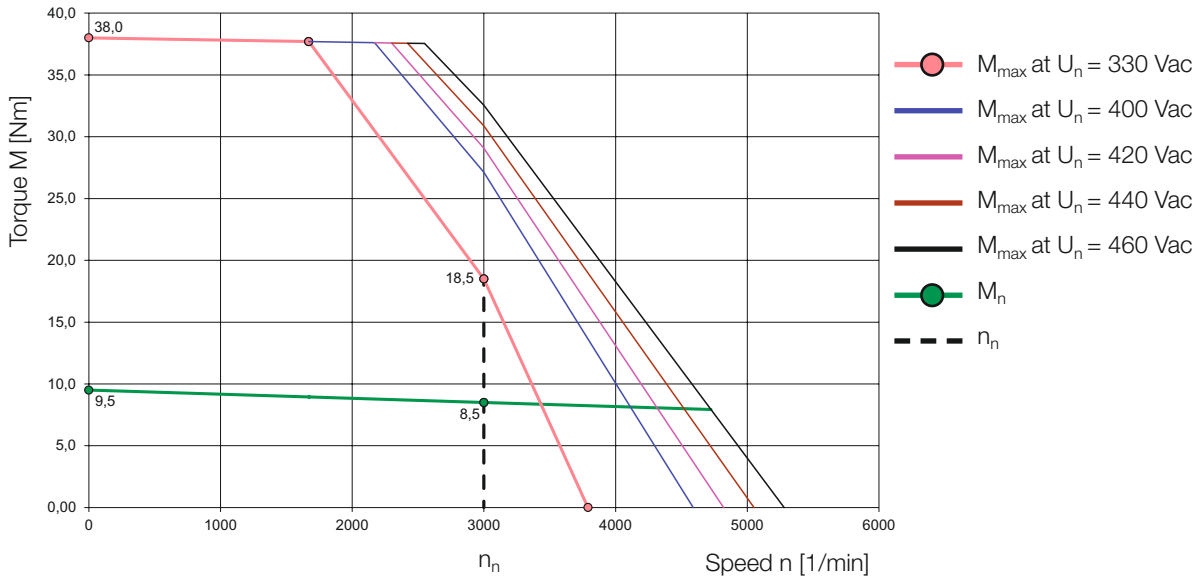

3.12 Technical data LST-127 (U_{dc} = 560 VDC)



LST-127-1
127-2
127-3
127-4
127-5

Technical data[1)]	Symbol	Unit	LST-127-1	LST-127-2	LST-127-3	LST-127-4	LST-127-5
Rated speed	n_n	min^{-1}	3000				
Rated frequency	f_N	Hz	150				
DC link voltage (controller)	U_{dc}	V	560				
Rated voltage	U_n	V	303	288	242	297	262
Rated torque	M_n	Nm	5.7	8.8	11.0	14.0	17.0
Rated current	I_n	A	4.0	6.3	9.5	10.0	13.0
Power	P	kW	1.79	2.76	3.45	4.55	5.33
Stall torque	M_0	Nm	6.6	10.5	13.5	17.0	22.0
Stall current	I_0	A	4.5	7.3	11.2	11.4	16.4
Maximum permissible torque	M_{max}	Nm	19.8	32.0	41.0	51.0	66.0
Maximum permissible current	I_{max}	A	23.0	36.0	56.0	47.0	82.0
Maximum permissible speed	n_{max}	min^{-1}	9000				
EMF constant	K_E	V/1000 min^{-1}	88.0	87.0	73.0	90.0	81.0
Torque constant	K_T	Nm/A	1.46	1.44	1.21	1.49	1.34
Winding resistance (2 phases)	R_{2ph}	Ω	4.20	1.70	0.95	0.95	0.54
Winding inductance (2 phases)	L_{2ph}	mH	27.8	15.2	9.0	10.0	5.9
No load speed	n_0	min^{-1}	3750	3790	4520	3670	4070
Electrical time constant	T_{el}	ms	6.7	8.9	9.5	10.5 ms	10.9
Thermal time constant	T_{th}	min	45	50	55	60	75
Moment of inertia of rotor	J	$kgcm^2$	4.0	6.2	7.5	9.5	11.7
Mass	m	kg	7.5	10.0	11.2	13.7	16.2
Brake (optional)							
Rated voltage	U_N	V	24 ± 10%				
Rated current at 20 °C for releasing	I_N	A	1.0				
Permissible maximum speed	n_{max}	min^{-1}	10,000				
Permissible friction work	W_R	Ws	1.29×10^6				
Moment of inertia	J_B	$kgcm^2$	1.66				

1) All figures with a tolerance of ± 10%.

Technical data[1)]	Symbol	Unit	LST-127-1	LST-127-2	LST-127-3	LST-127-4	LST-127-5
Mass	m	kg	0.9				
Braking torque	M_H	Nm	18.0				

1) All figures with a tolerance of ± 10%.

3.12.1 Dimensional sketch LST-127

Rotary encoder option	Length [mm]	LST-127-1	LST-127-2	LST-127-3	LST-127-4	LST-127-5
1R/3R	L (L + brake)	185 (228)	219 (262)	236 (279)	270 (313)	304 (347)
G3 + G5	L (L + brake)	198 (241)	232 (275)	249 (292)	283 (326)	317 (360)
G6.1x	L (L + brake)	188 (231)	222 (265)	239 (282)	273 (316)	307 (350)
G6.2x + G7.2x	L (L + brake)	185 (228)	219 (262)	236 (279)	270 (313)	304 (347)
G12.1x	L (L + brake)	205 (248)	239 (282)	256 (299)	290 (333)	324 (367)

Table 3.20 Overview of the motor lengths – for overview of the encoder types see chapter 5.1; all data in [mm]

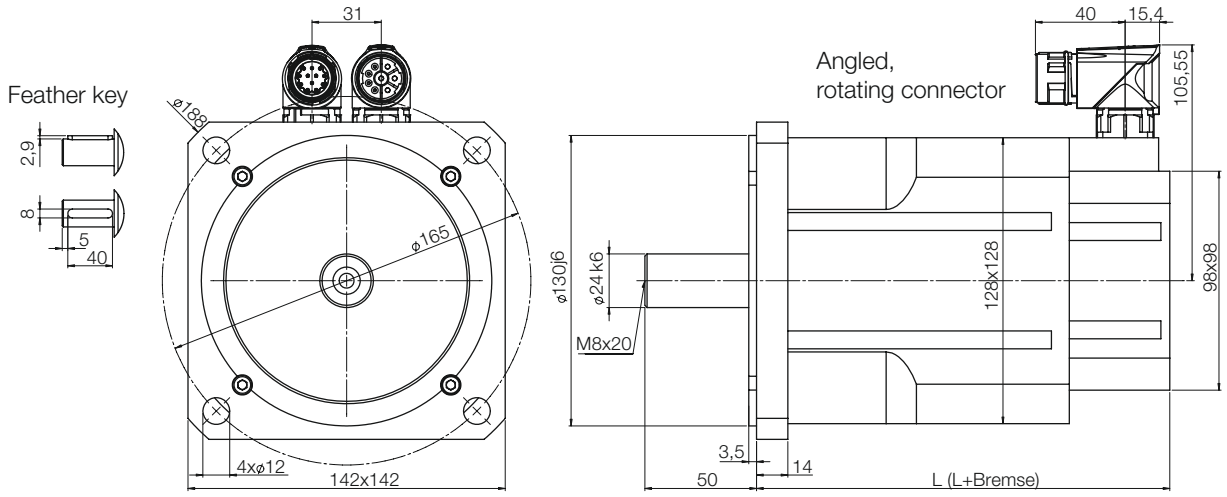

3.12.2 Characteristics LST-127

Explanation of the characteristics:

The characteristic M_{max} describes the maximum torque possible for a short time at the related speed. It is important for dynamic processes.
The characteristic M_n shows the thermally permissible rated torque.
The characteristics are limited by the related maximum permissible speed n_{max} (for n_{max} see the table "Technical data").

LST-127-1-30-560

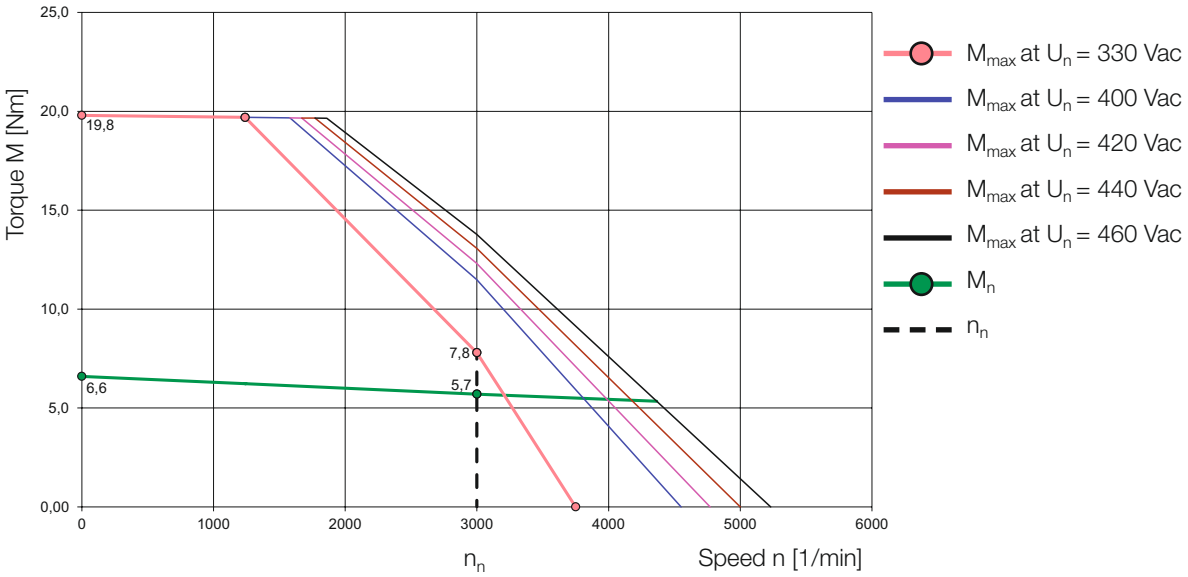

LST-127-2-30-560

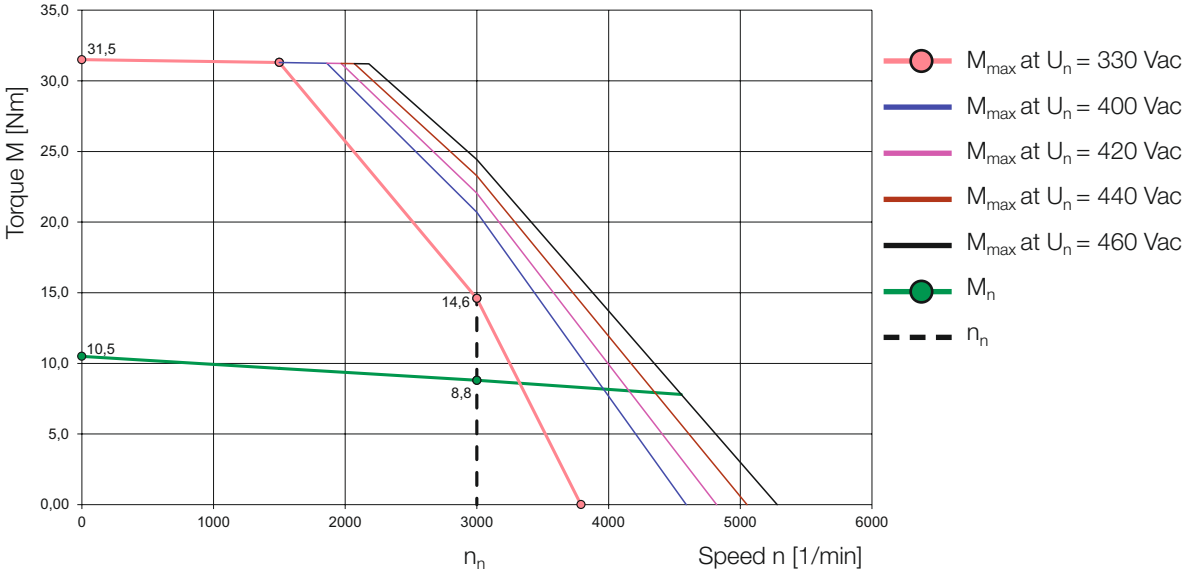

LST-127-3-30-560

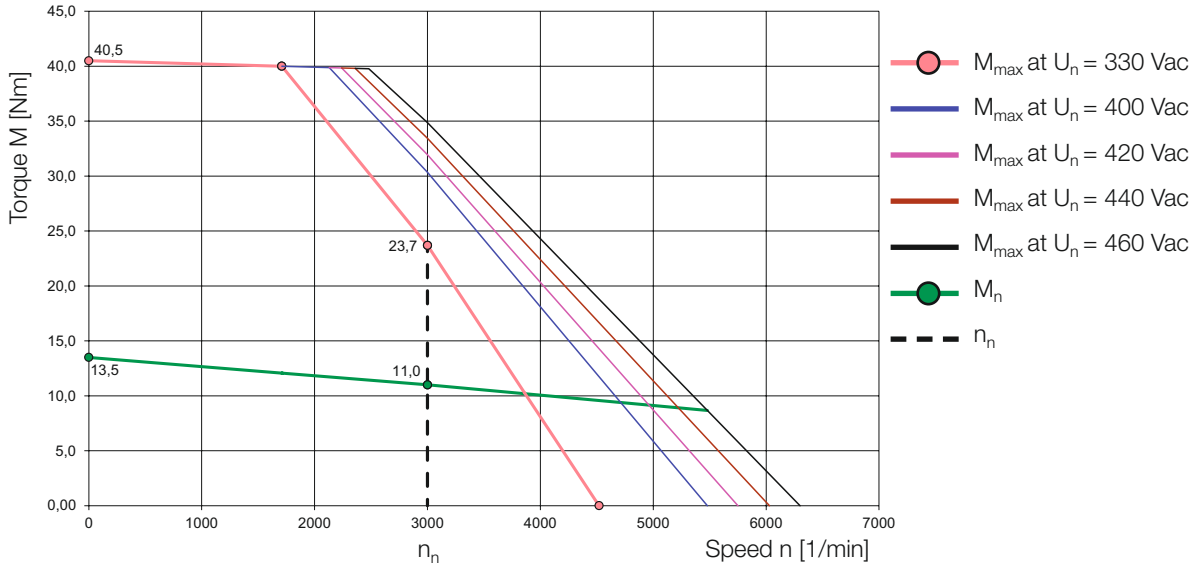

LST-127-4-30-560

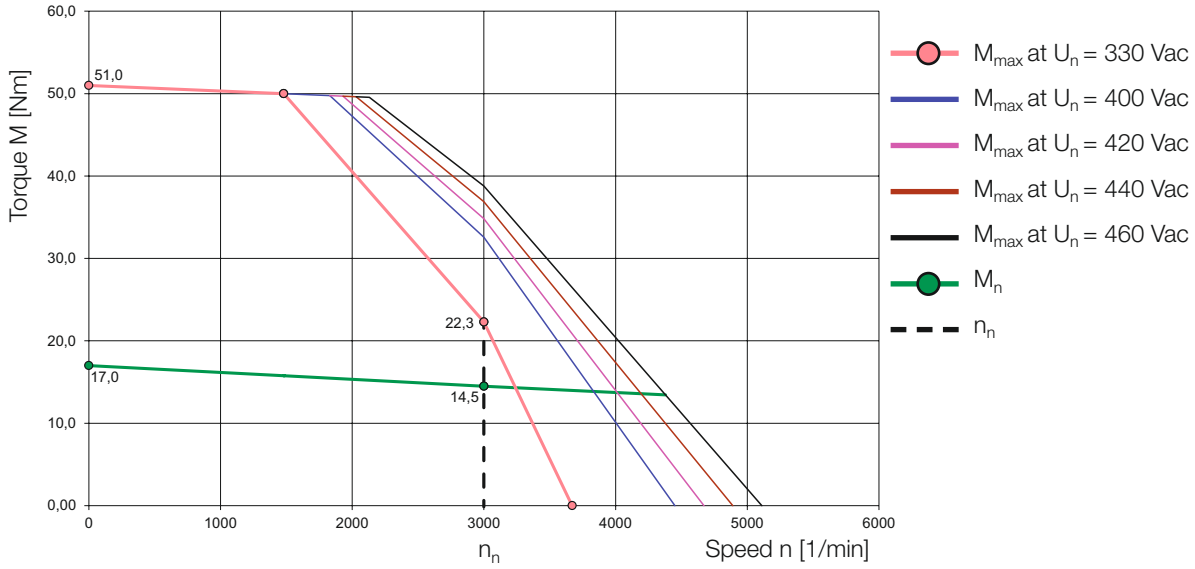

LST-127-5-30-560

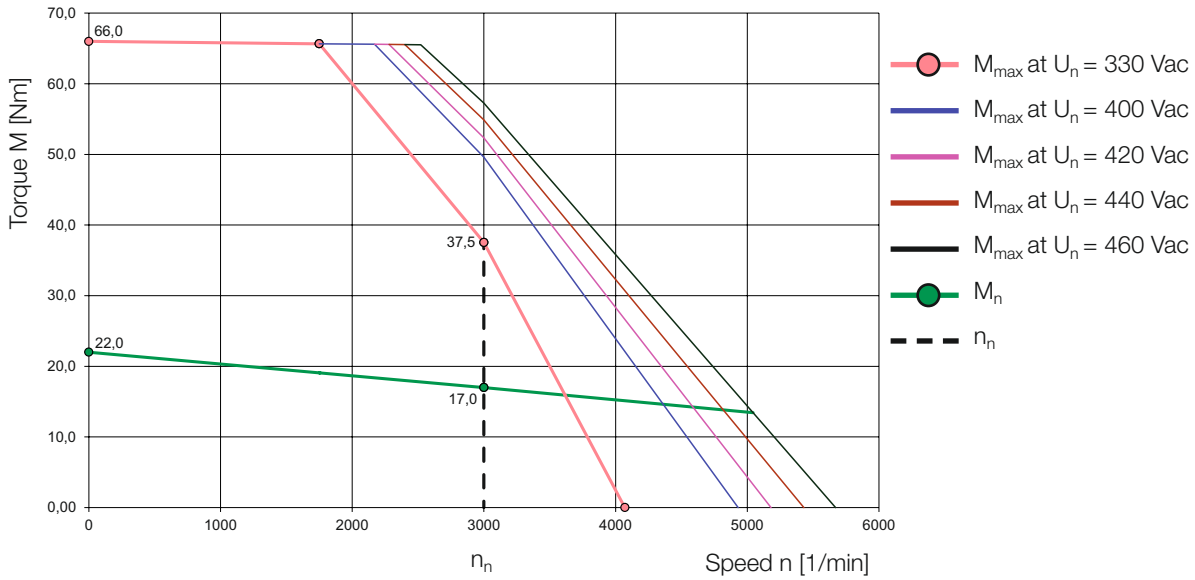

3.13 Technical data LST-158 (U_{dc} = 560 VDC)



LST-158-1
158-2
158-3
158-4
158-5

Technical data[1]	Symbol	Unit	LST-158-1	LST-158-2	LST-158-3	LST-158-4	LST-158-5
Rated speed	n_n	min^{-1}	3000				
Rated frequency	f_N	Hz	150				
DC link voltage (controller)	U_{dc}	V	560				
Rated voltage	U_n	V	236	321	309	321	321
Rated torque	M_n	Nm	13.0	17.0	19.0	24.0	26.0
Rated current	I_n	A	8.2	10.6	13.1	14.7	18.2
Power	P	kW	4.00	5.33	6.00	7.53	8.16
Stall torque	M_0	Nm	13.5	19.0	22.0	29.0	35.0
Stall current	I_0	A	8.2	11.5	14.6	17.2	23.5
Maximum permissible torque	M_{max}	Nm	47.0	67.0	77.0	102.0	105.0
Maximum permissible current	I_{max}	A	40.0	56 .0	72 .0	84.0	99.0
Maximum permissible speed	n_{max}	min^{-1}	6000				
EMF constant	K_E	V/1000 min^{-1}	100.0	100.0	91.0	102.0	90.0
Torque constant	K_T	Nm/A	1.65	1.65	1.51	1.69	1.49
Winding resistance (2 phases)	R_{2ph}	Ω	1.10	0.61	0.41	0.31	0.16
Winding inductance (2 phases)	L_{2ph}	mH	13.5	9.0	6.4	5.6	3.2
No load speed	n_0	min^{-1}	3500	3500	3400	3430	3660
Electrical time constant	T_{el}	ms	12.3	14.8	15.6	18.1	19.9
Thermal time constant	T_{th}	min	45	53	60	70	80
Moment of inertia of rotor	J	$kgcm^2$	13.1	18.7	22.0	33.0	46.0
Mass	m	kg	13.9	18.2	20.3	26.7	35.2
Brake (optional)							
Rated voltage	U_N	V	24 ± 10%				
Rated current at 20 °C for releasing	I_N	A	1.1				
Permissible maximum speed	n_{max}	min^{-1}	10,000				
Permissible friction work	W_R	Ws	2.90×10^6				
Moment of inertia	J_B	$kgcm^2$	5.56				

1) All figures with a tolerance of ± 10%.

Technical data[1)]	Symbol	Unit	LST-158-1	LST-158-2	LST-158-3	LST-158-4	LST-158-5
Mass	m	kg	1.6				
Braking torque	M_H	Nm	36.0				

1) All figures with a tolerance of ± 10%.

3.13.1 Dimensional sketch LST-158

Rotary encoder option	Length [mm]	LST-158-1	LST-158-2	LST-158-3	LST-158-4	LST-158-5
1R/3R	L (L + brake)	201 (254)	235 (288)	252 (305)	310 (356)	395 (448)
G6.1x	L (L + brake)	204 (251)	238 (291)	255 (308)	313 (359)	398 (451)
G12.1x	L (L + brake)	211 (274)	255 (308)	272 (325)	330 (376)	415 (468)

Table 3.21 Overview of the motor lengths – for overview of the encoder types see chapter 5.1; all data in [mm]

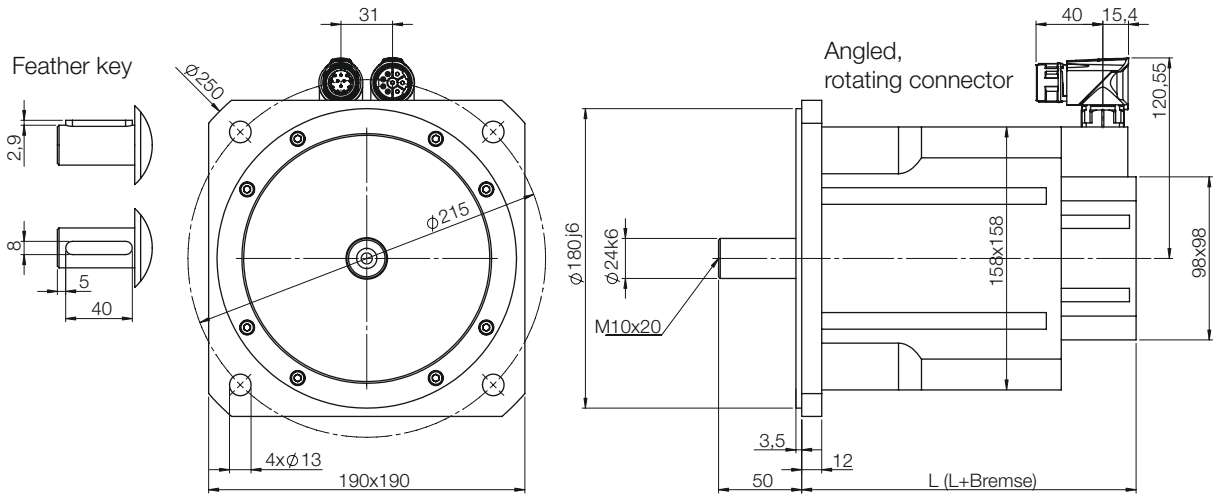

3.13.2 Characteristics LST-158

Explanation of the characteristics:

The characteristic M_{max} describes the maximum torque possible for a short time at the related speed. It is important for dynamic processes.
The characteristic M_n shows the thermally permissible rated torque.
The characteristics are limited by the related maximum permissible speed n_{max} (for n_{max} see the table "Technical data").

LST-158-1-30-560

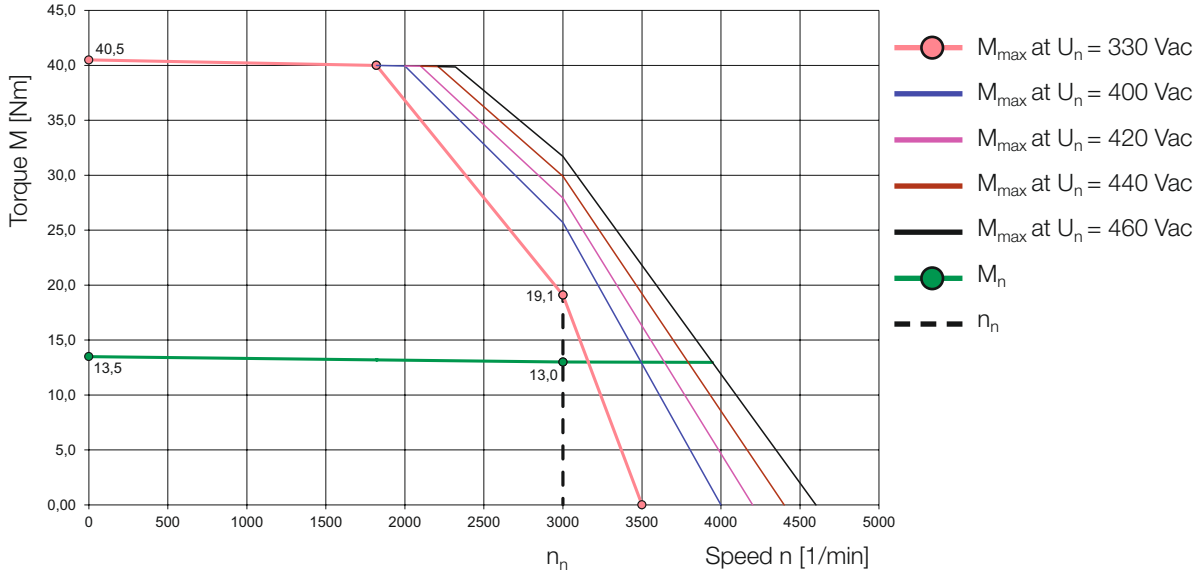

LST-158-2-30-560

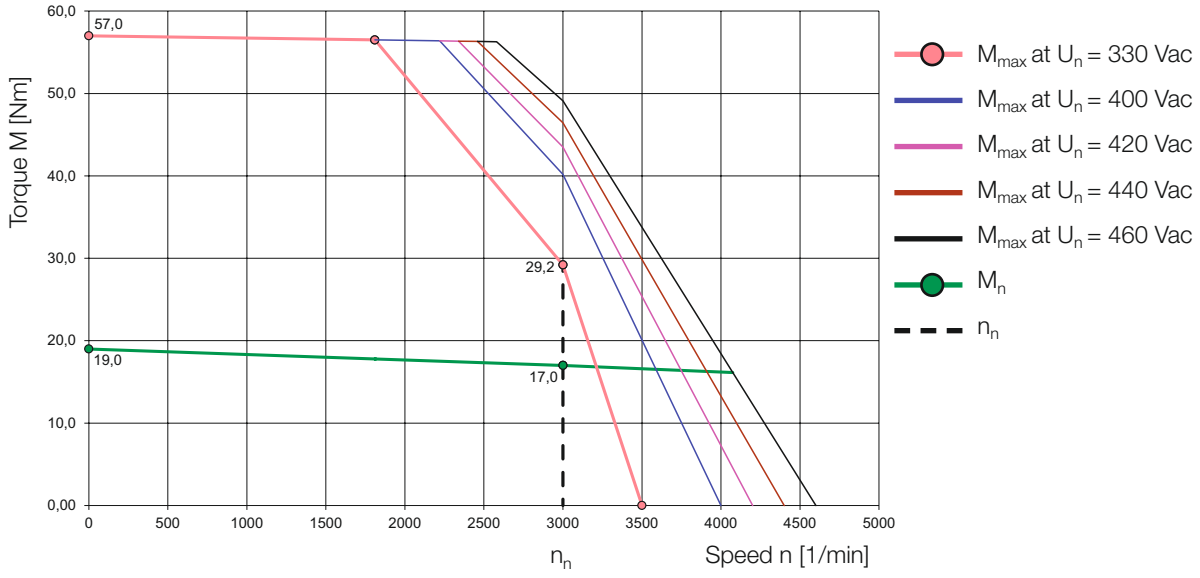

LST-158-3-30-560

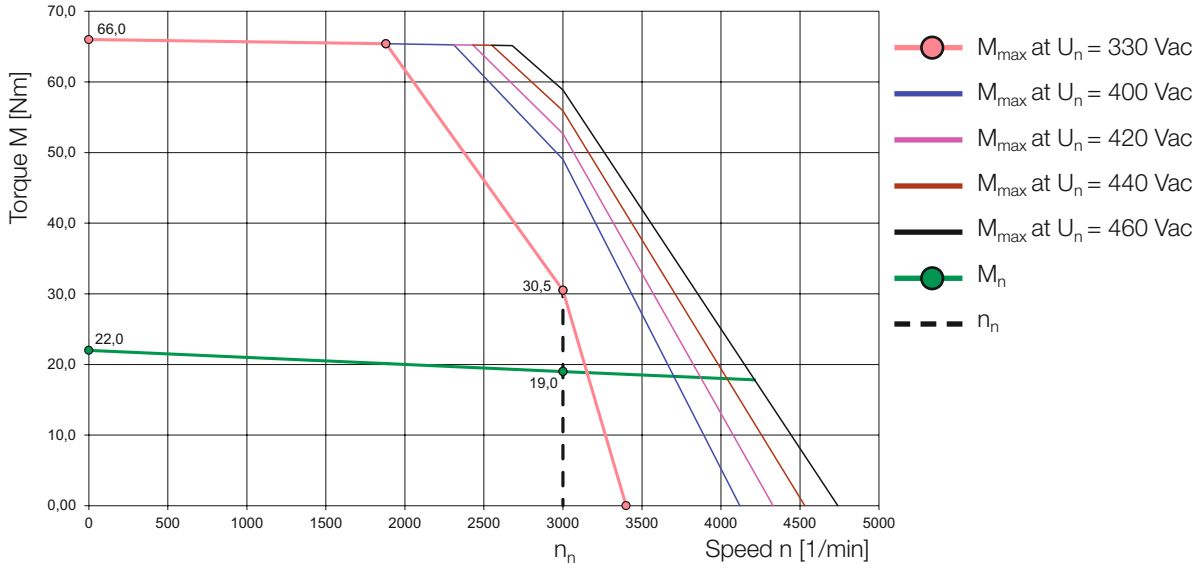

LST-158-4-30-560

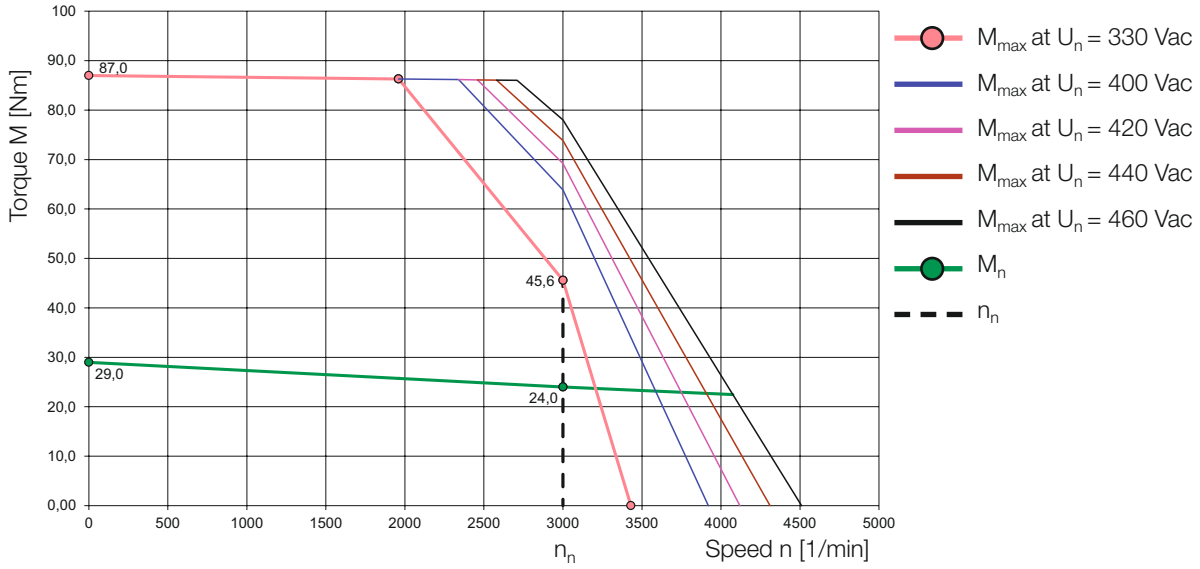

LST-158-5-30-560

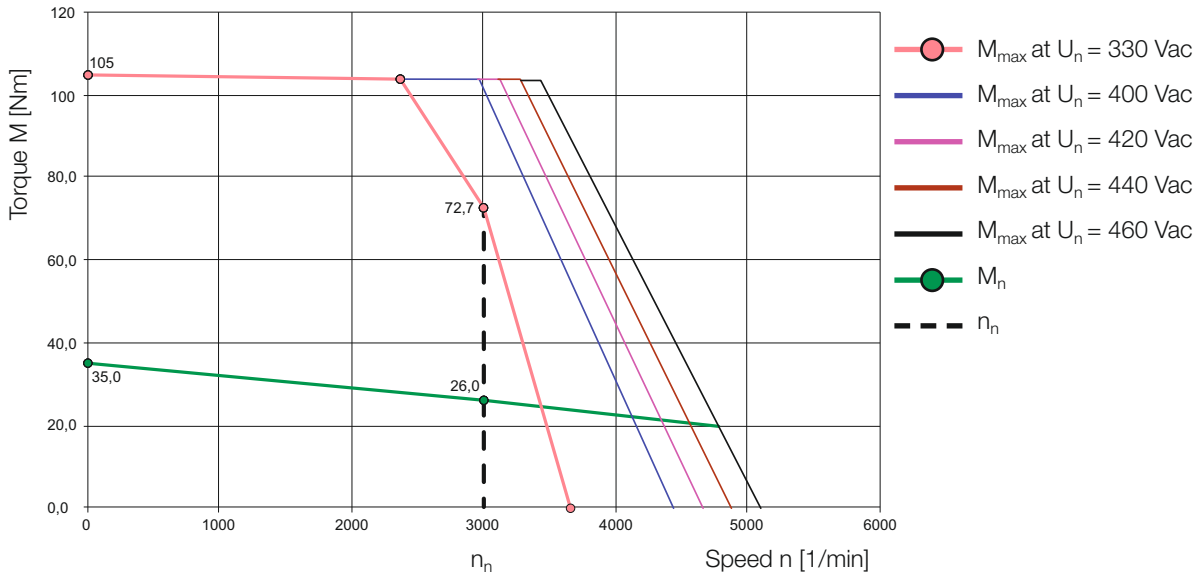

3.14 Technical data LST-190 (U_{dc} = 560 VDC)

LST-190-1
190-2
190-3



Technical data[1)]	Symbol	Unit	LST-190-1	LST-190-2	LST-190-3
Rated speed	n_n	min^{-1}		3000	
Rated frequency	f_N	Hz		150	
DC link voltage (controller)	U_{dc}	V		560	
Rated voltage	U_n	V	276	300	320
Rated torque	M_n	Nm	21.0	23.0	26.0
Rated current	I_n	A	13.5	15.0	17.9
Power	P	kW	6.60	7.22	8.16
Stall torque	M_0	Nm	27.0	32.0	40.0
Stall current	I_0	A	16.0	19.0	24.7
Maximum permissible torque	M_{max}	Nm	81.0	96.0	120.0
Maximum permissible current	I_{max}	A	62.0	74.0	96.0
Maximum permissible speed	n_{max}	min^{-1}		6000	
EMF constant	K_E	V/1000 min^{-1}	102.0	102.0	98.0
Torque constant	K_T	Nm/A	1.69	1.69	1.62
Winding resistance (2 phases)	R_{2ph}	Ω	0.43	0.35	0.23
Winding inductance (2 phases)	L_{2ph}	mH	4.4	3.8	2.7
No load speed	n_0	min^{-1}	3230	3230	3360
Electrical time constant	T_{el}	ms	10.2	10.9	11.7
Thermal time constant	T_{th}	min	60	67	67
Moment of inertia of rotor	J	$kgcm^2$	36.0	39.0	46.0
Mass	m	kg	23.5	26.0	31.5
Brake (optional)					
Rated voltage	U_N	V		24 ± 10%	
Rated current at 20 °C for releasing	I_N	A		1.1	
Permissible maximum speed	n_{max}	min^{-1}		10,000	
Permissible friction work	W_R	Ws		$2.9\ 10^6$	
Moment of inertia	J_B	$kgcm^2$		6.2	

1) All figures with a tolerance of ± 10%.

Technical data[1)]	Symbol	Unit	LST-190-1	LST-190-2	LST-190-3
Mass	m	kg		3.2	
Braking torque	M_H	Nm		36	

1) All figures with a tolerance of ± 10%.

3.14.1 Dimensional sketch LST-190

Rotary encoder option	Length [mm]	LST-190-1	LST-190-2	LST-190-3
1R/3R	L (L + brake)	242 (296)	257 (311)	287 (341)
G6.1x	L (L + brake)	245 (299)	260 (314)	290 (344)
G6.2x + G7.2x	L (L + brake)	(296)	(311)	(341)
G12.1x	L (L + brake)	262 (316)	277 (331)	307 (361)

Table 3.22 Overview of the motor lengths – for overview of the encoder types see chapter 5.1; all data in [mm]

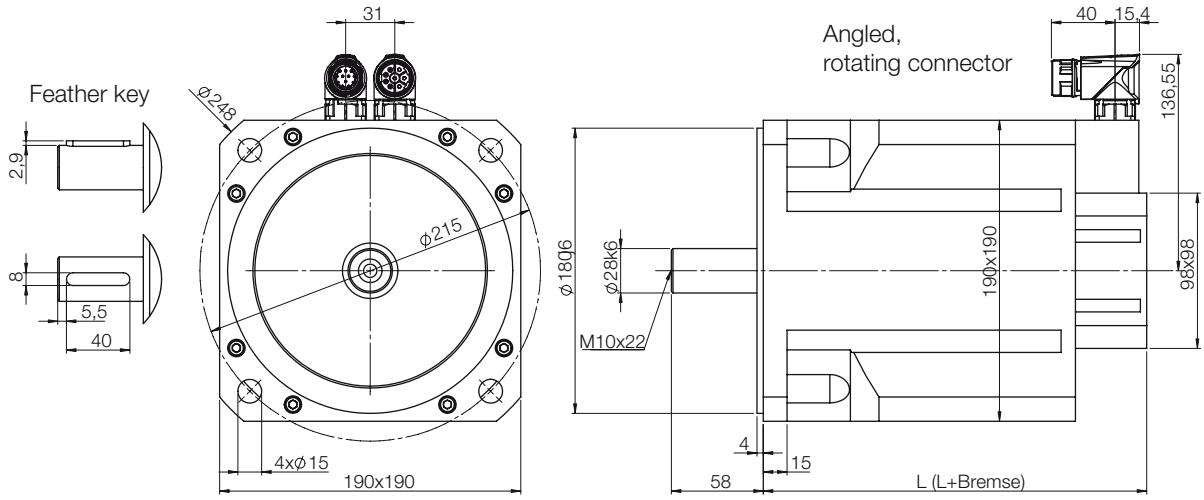

3.14.2 Characteristics LST-190

Explanation of the characteristics:

The characteristic M_{max} describes the maximum torque possible for a short time at the related speed. It is important for dynamic processes.
The characteristic M_n shows the thermally permissible rated torque.
The characteristics are limited by the related maximum permissible speed n_{max} (for n_{max} see the table "Technical data").

LST-190-1-30-560

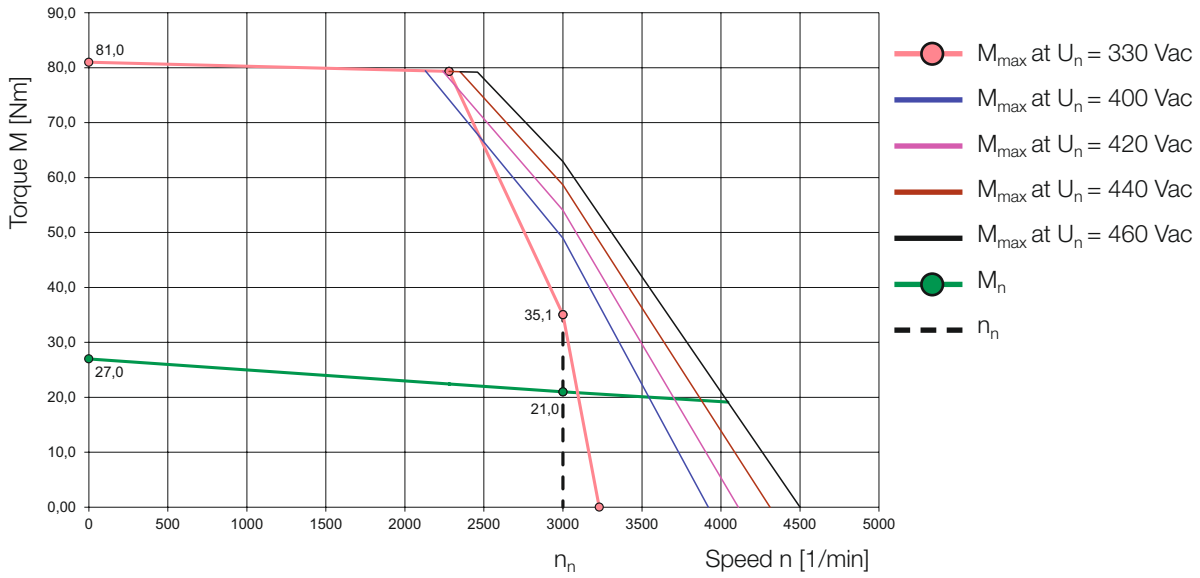

LST-190-2-30-560

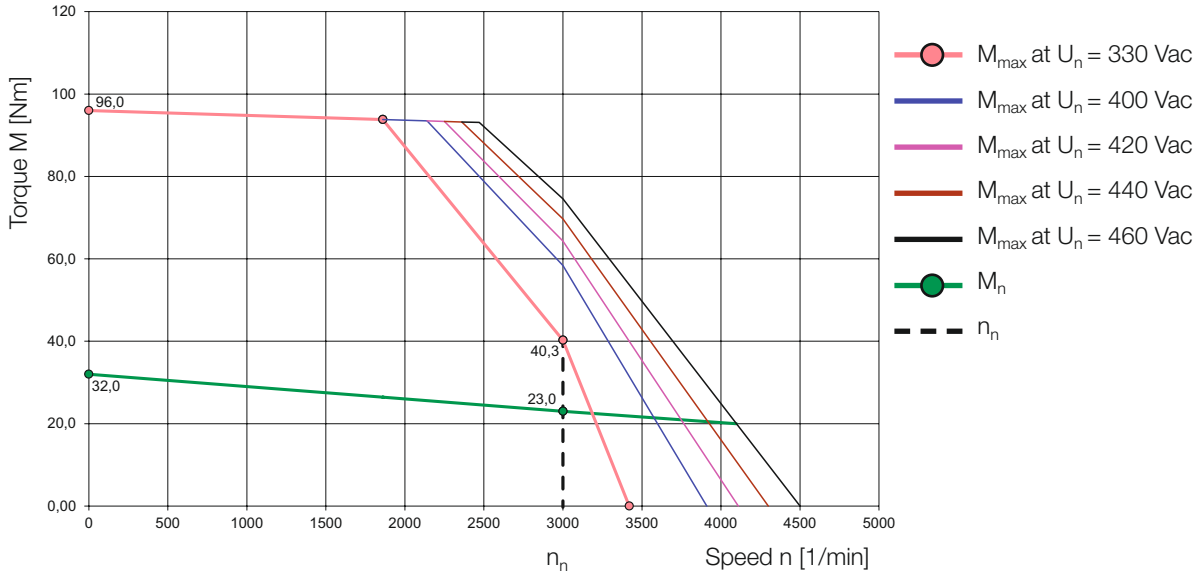

LST-190-3-30-560

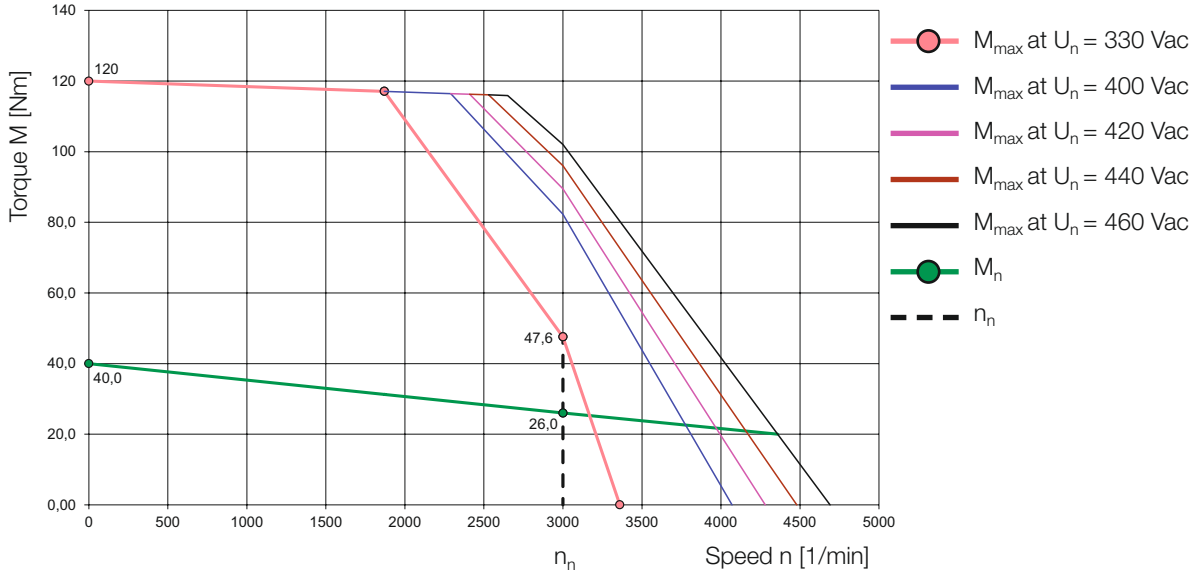

3.15 Technical data LST-220 (U_{dc} = 560 V)

LST-220-1
220-2
220-3
220-4



Technical data[1)]	Symbol	Unit	LST-220-1	LST-220-2	LST-220-3	LST-220-4
Rated speed	n_n	min^{-1}	3000			
Rated frequency	f_N	Hz	150			
DC link voltage (controller)	U_{dc}	V	560			
Rated voltage	U_n	V	352	352	321	326
Rated torque	M_n	Nm	30	50	60	50
Rated current	I_n	A	17.8	31.1	34.9	29.3
Power	P	kW	9.42	15.70	18.84	15.70
Stall torque	M_0	Nm	40	68	93	115
Stall current	I_0	A	21.8	39.9	53.0	63.0
Maximum permissible torque	M_{max}	Nm	120	204	279	345
Maximum permissible current	I_{max}	A	85	156	207	247
Maximum permissible speed	n_{max}	min^{-1}	3600			
EMF constant	K_E	V/1000 min^{-1}	111	103	106	110
Torque constant	K_T	Nm/A	1.84	1.70	1.75	1.82
Winding resistance (2 phases)	R_{2ph}	Ω	0.25	0.10	0.06	0.05
Winding inductance (2 phases)	L_{2ph}	mH	5.70	2.50	1.88	1.50
No load speed	n_0	min^{-1}	3190	3200	3300	3180
Electrical time constant	T_{el}	ms	23	25	31	30
Thermal time constant	T_{th}	min	47	65	79	90
Moment of inertia of rotor	J	$kgcm^2$	76.0	114.0	153.0	190.0
Mass	m	kg	41	56	73	89
Brake (optional)						
Rated voltage	U_N	V	24 ± 10%			
Rated current at 20 °C for releasing	I_N	A	2.1			
Permissible maximum speed	n_{max}	min^{-1}	10,000			
Permissible friction work	W_R	Ws	13×10^6			

1) All figures with a tolerance of ± 10%.

Technical data[1)]	Symbol	Unit	LST-220-1	LST-220-2	LST-220-3	LST-220-4
Moment of inertia	J_B	kgcm²	56.0			
Mass	m	kg	9.5			
Braking torque	M_H	Nm	145			

1) All figures with a tolerance of ± 10%.

3.15.1 Dimensional sketch LST-220

Rotary encoder option	Length [mm]	LST-220-1	LST-220-2	LST-220-3	LST-220-4
1R/3R	L (L + brake)	310 (378)	378 (446)	446 (514)	514 (582)
G6.1x	L (L + brake)	312 (381)	380 (449)	448 (517)	516 (585)
G6.2x + G7.2x	L (L + brake)	(378)	(446)	(514)	(582)
G12.1x	L (L + brake)	322 (390)	390 (458)	458 (526)	526 (594)

Table 3.23 Overview of the motor lengths – for overview of the encoder types see chapter 5.1; all data in [mm]

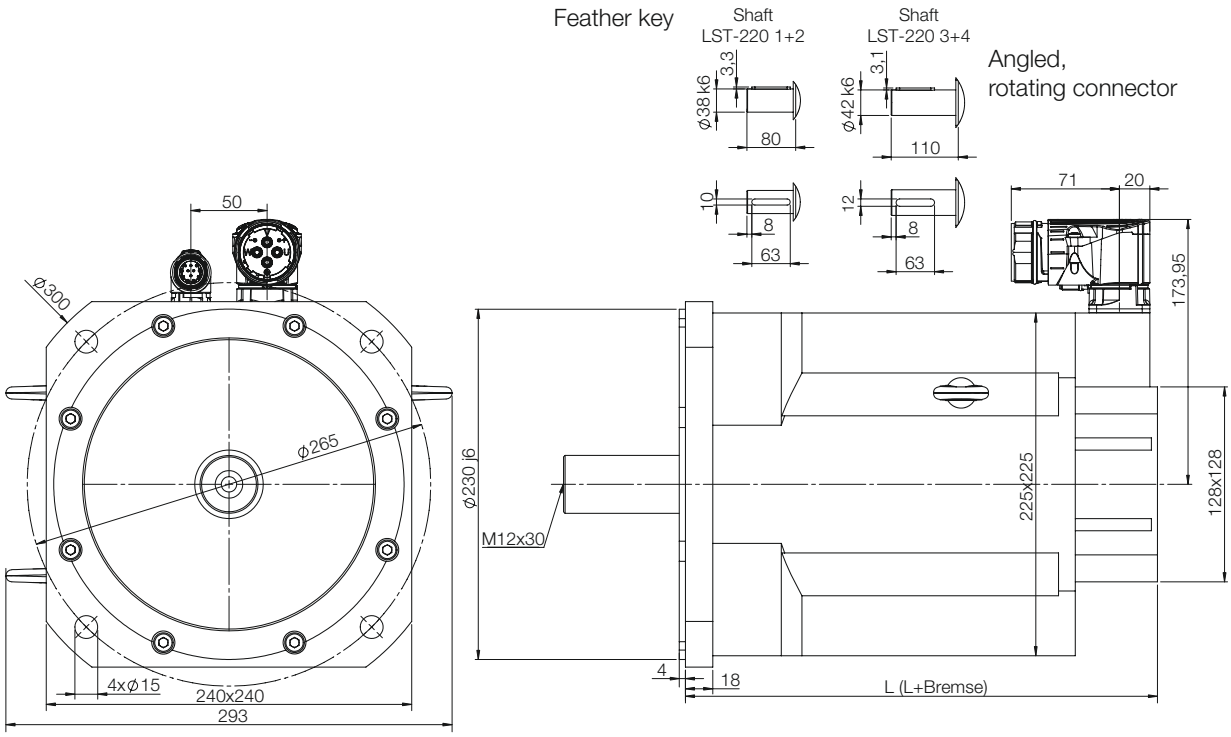

3.15.2 Characteristics LST-220

Explanation of the characteristics:

The characteristic M_{max} describes the maximum torque possible for a short time at the related speed. It is important for dynamic processes.
The characteristic M_n shows the thermally permissible rated torque.
The characteristics are limited by the related maximum permissible speed n_{max} (for n_{max} see the table "Technical data").

LST-220-1-30-560

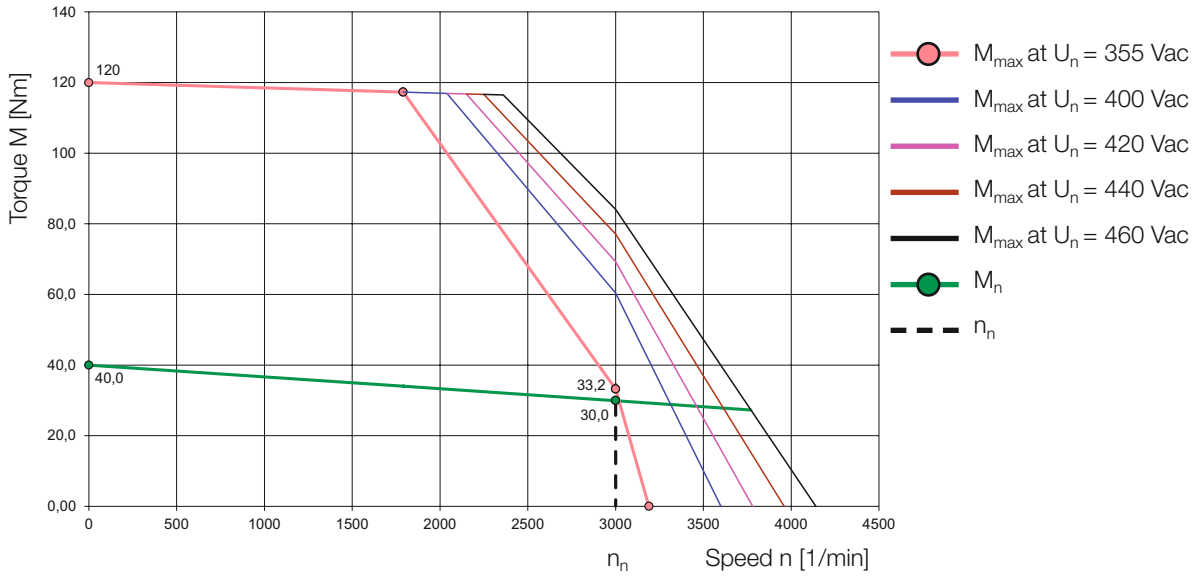

LST-220-2-30-560

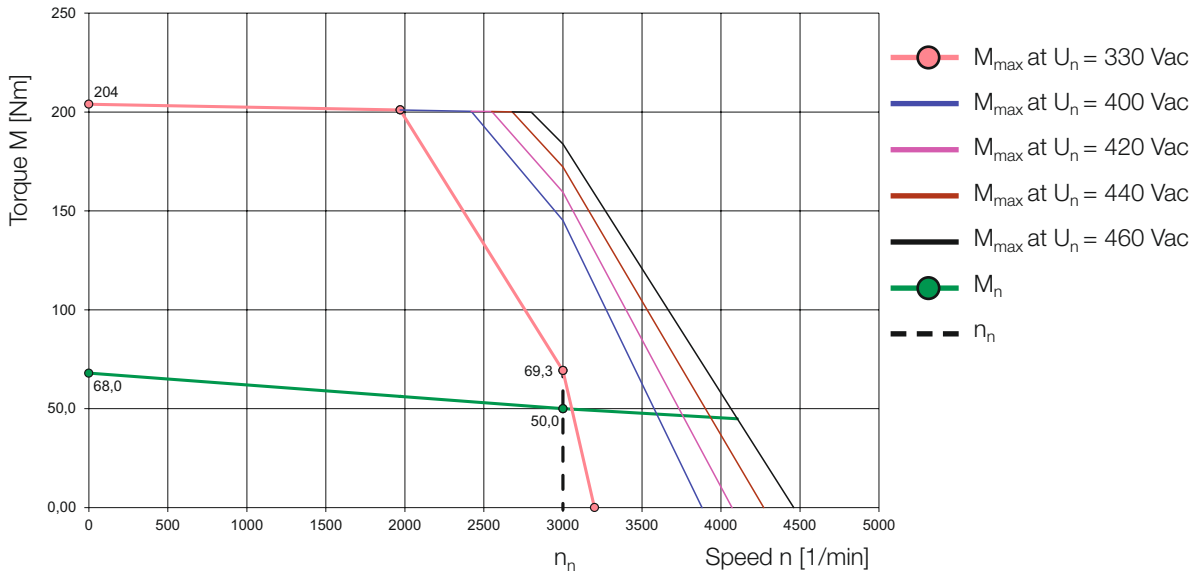

LST-220-3-30-560

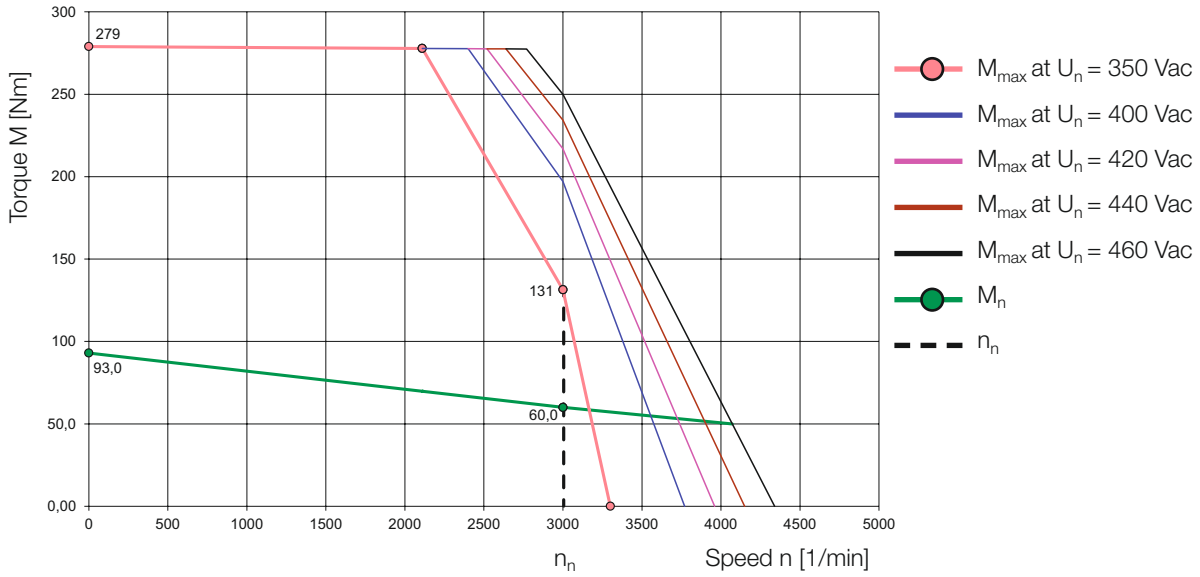

LST-220-4-30-560

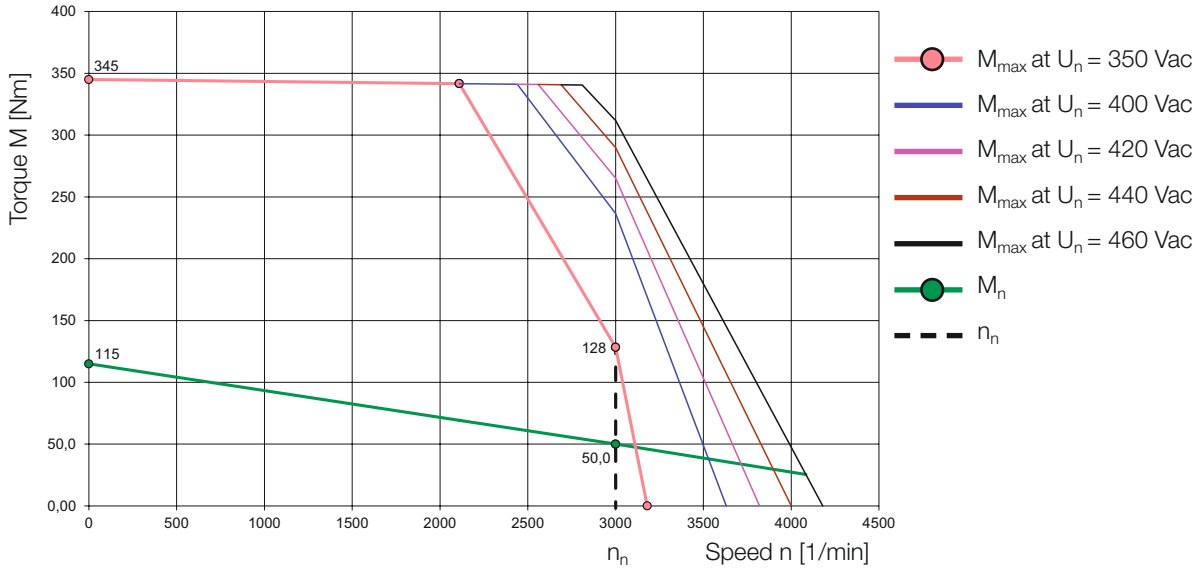

Space for your notes

3.16 LST servomotors for functional extra-low voltage (24/48 VDC windings)



The servomotors in the LST range are also available with motor windings for functional extra-low voltage according to IEC 364 (VDE0100, part 410). Together with the servocontroller CDF3000, they form an optimal combination for this voltage range. The LST servomotors can be operated with a DC link voltage of either 24 V or 48 V.

Technical data

Motor type	Stall torque M_0 [Nm]	Rated torque M_n [Nm]	Rated current at 24 V I_n [A]	Rated current at 48 V I_n [A]	Rated speed n_n [min^{-1}] at 24 V	Rated speed n_n [min^{-1}] at 48 V
LST-037-1-80-24/48	0.10	0.09	5.4	5.4	6000	6000
LST-037-2-60-24/48	0.20	0.18	6.9	6.9	6000	6000

Table 3.24 Technical data for the LST servomotor product range for functional extra-low voltage
All figures with a tolerance of ± 5%

3.17 Technical data LST-037 (U_{dc} = 24/48 VDC)



LST-037-1
037-2
037-3

3.17.1 Dimensional sketch LST-037 (U_{dc} = 24/48 VDC)

Rotary encoder option	Length [mm]	LST-037-1	LST-037-2	LST-037-3
1R	L (L + brake)	81 (111)	86 (116)	111 (141)

Table 3.25 Overview of the motor lengths – for overview of the encoder types see chapter 5.1; all data in [mm]

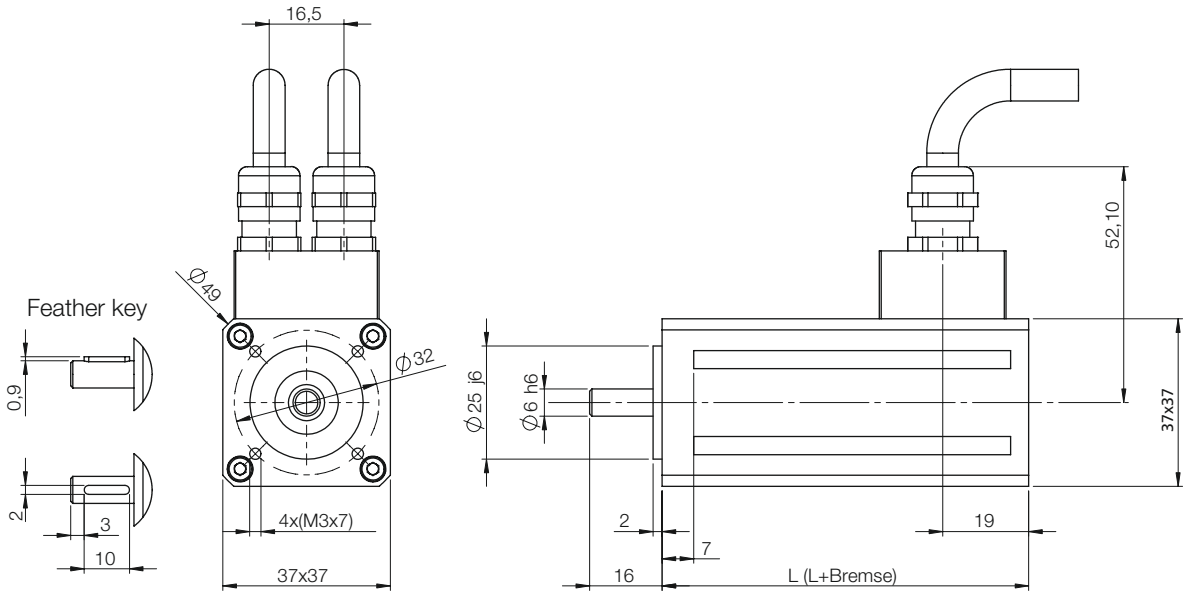

The LST servomotors can be operated with a DC link voltage of either 24 V or 48 V.

Technical data[1)]	Symbol	Unit	LST-037-1		LST-037-2	
			At U_{dc} = 24 V	At U_{dc} = 48 V	At U_{dc} = 24 V	At U_{dc} = 48 V
Rated speed	n_n	min^{-1}	6000		6000	
Rated frequency	f_N	Hz	400		300	
DC link voltage (controller)	U_{dc}	V	24	48	24	48
Rated voltage	U_n	V	12	23	13	23
Rated torque	M_n	Nm	0.09		0.18	
Rated current	I_n	A	5.4		6.9	
Power	P	kW	0.075		0.11	
Stall torque	M_0	Nm	0.10		0.20	
Stall current	I_0	A	5.5		7.1	
Maximum permissible torque	M_{max}	Nm	0.40		0.80	
Maximum permissible current	I_{max}	A	24		31	
Maximum permissible speed	n_{max}	min^{-1}	12000			
EMF constant	K_E	V/1000 min^{-1}	1.1		1.7	
Torque constant	K_T	Nm/A	0.02		0.03	
Winding resistance (2 phases)	R_{2ph}	Ω	0.42		0.34	
Winding inductance (2 phases)	L_{2ph}	mH	0.10			
No load speed	n_0	min^{-1}	13640	27520	8820	17700
Electrical time constant	T_{el}	ms	0.24		0.29	
Thermal time constant	T_{th}	min	18		20	
Moment of inertia of rotor	J	$kgcm^2$	0.06			
Mass	m	kg	0.37		0.45	
Brake (optional)						
Rated voltage	U_N	V	24 ± 10%			
Rated current at 20 °C for releasing	I_N	A	0.33			
Permissible maximum speed	n_{max}	min^{-1}	10,000			
Permissible friction work	W_R	Ws	0.20×10^6			
Moment of inertia	J_B	$kgcm^2$	0.013			
Mass	m	kg	0.075			
Braking torque	M_H	Nm	0.4			

1) All figures with a tolerance of ± 10%.

3.17.2 Characteristics LST-037 (U_{dc} = 24/48 VDC)

Explanation of the characteristics:

The characteristic M_{max} describes the maximum torque possible for a short time at the related speed. It is important for dynamic processes.
The characteristic M_n shows the thermally permissible rated torque.
The characteristics are limited by the related maximum permissible speed n_{max} (for n_{max} see the table "Technical data").

NOTE:
The LST servomotors for functional extra-low voltage can be operated with a DC link voltage of either 24 V or 48 V.

LST-037-1-80-24

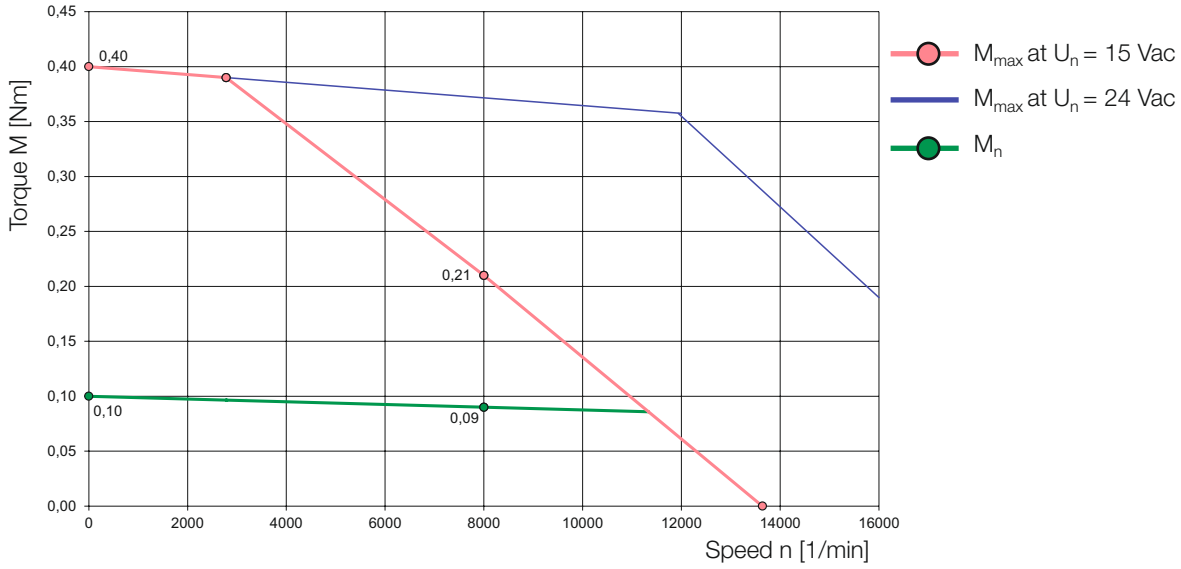

LST-037-2-60-24

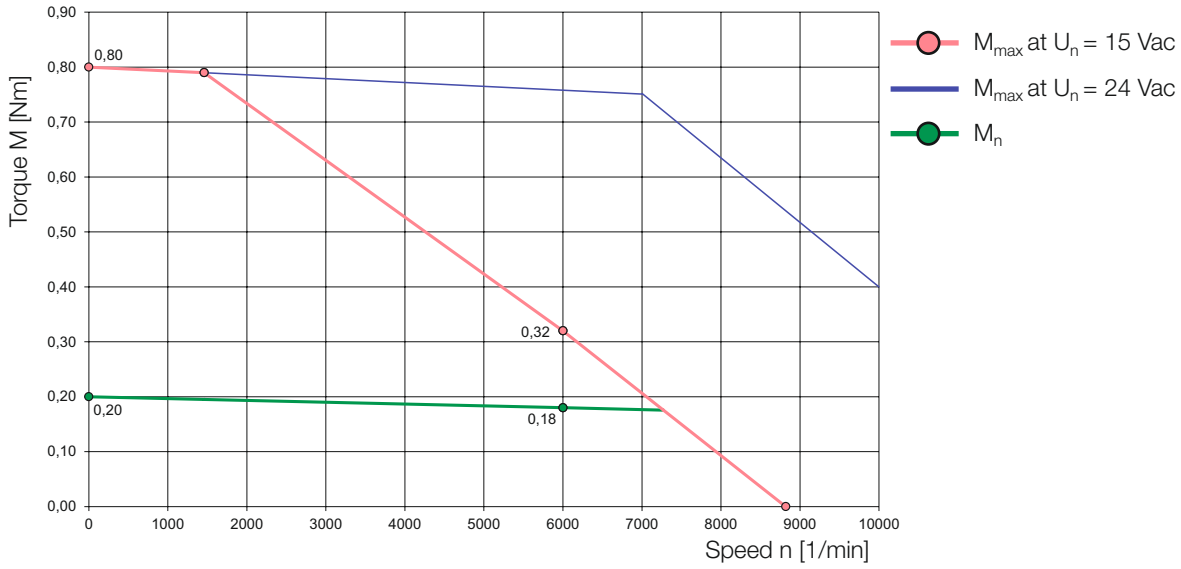

4 Connection system



Example:

LSN-097-0510-30-560/T15,S4,G6.3S

Connector alignment

Encoder system option

Standard model

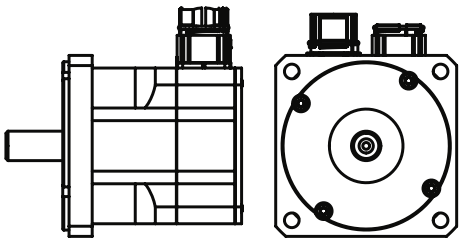

Straight connector

S1 model

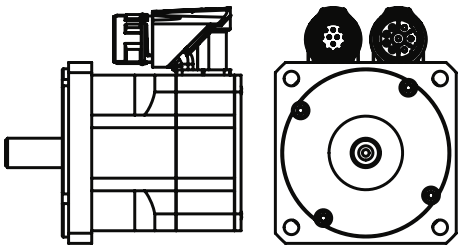

Connector, angled to the D-end

S2 model

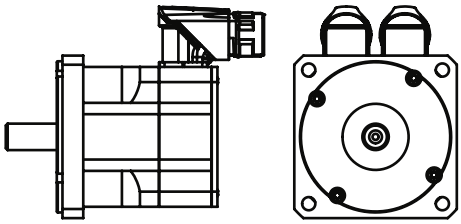

Connector, angled to the N-end

S4 model

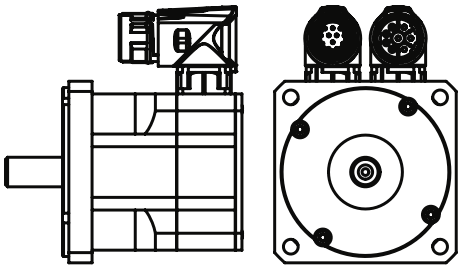

Connector, angled / rotating

Standard model

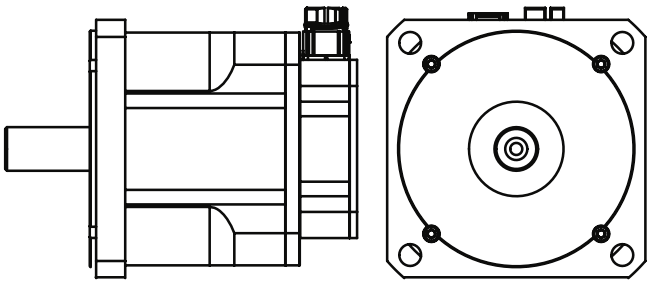

Figure 4.1 Straight connector

S2 model

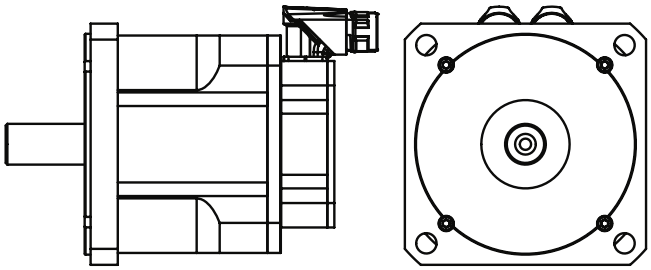

Figure 4.2 Connector, angled to the N-end

S4 model

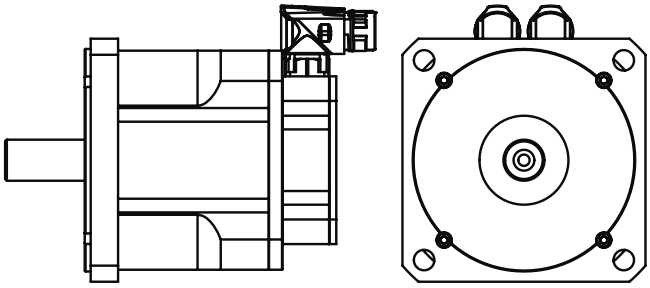

Figure 4.3 Connector, angled / rotating (limited by mechanical aspects)

S7 model

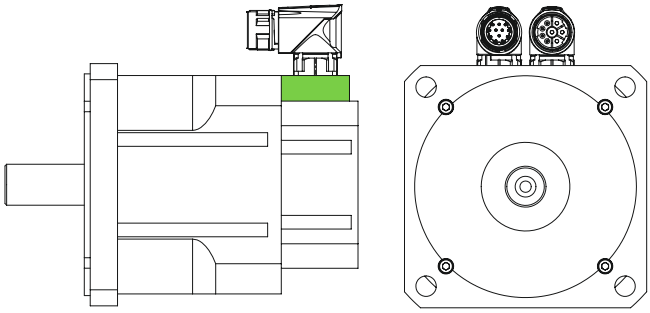

Figure 4.4 Connector, angled/rotating to the D-end

NOTE:

From size LSN/LST-127 raised bodies (green in the figure) are used for angled / rotating connectors with an angle of rotation of 270º.

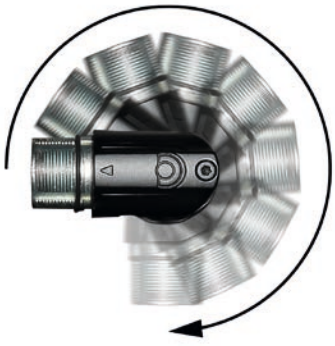

4.1 Encoder connections

Encoder connection M23 (resolver)

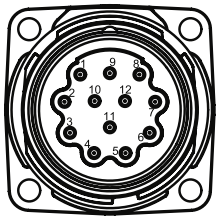

12-pin socket
contacts Ø 1 mm

Pin	Des.	Designation
1	Cos+	(S1)
2	COS-	(S3)
3	SIN+	(S2)
4	SIN-	(S4)
6	REF+	(R1)
7	REF-	(R2)
11	PTC+	Motor PTC
12	PTC-	Motor PTC
5, 8, 9, 10	n. c.	Not used

2.26 Encoder connection M23 (resolver)

Encoder connection M23 (optical encoder)

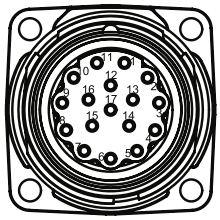

17-pin socket
contacts Ø 1 mm

Pin	Des. G3, G5, G12.x	Des. G6.x
1	A+	A+
2	A-	A-
3	B+	B+
4	B-	B-
7	GND / 0V	GND / 0V
8	VCC +5 V/150 mA	-
9	-	VCC 7-12V/100mA
10	DATA+	DATA+
11	DATA-	DATA-
12	CLK+	-
13	CLK-	-
16	VCC sense	-
17	GND sense	-
5, 6, 14, 15	n. c.	n. c.

2.27 Encoder connection M23 (optical encoder)

4.1.1 Power connections

Power connection M23

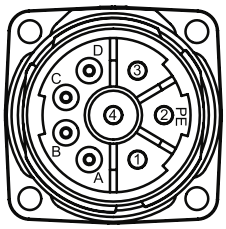

8-pin socket
contacts
for pin 1 ... 4 ∅ 2 mm
for pin A ... D ∅ 1 mm

Pin	Designation
1	U
2	PE
3	W
4	V
A	Brake + *)
B	Brake - *)
C	Hiperface DSL + / Temp + *)
D	Hiperface DSL - / Temp - *)
*) Depending on options selected	

2.28 Power connection M23

Power connection M40

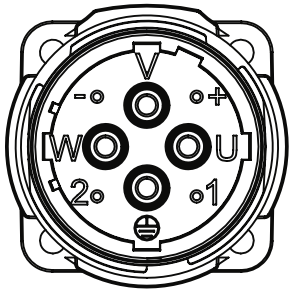

7-pin socket
contacts
for contact: 1.2 Ø 1 mm
for contact: U, V, W Ø x mm
for contact: +, - Ø x mm

Pin	Designation
U	Phase U
V	Phase V
W	Phase W
PE	Protective earth conductor/earth
1	Temp + *)
2	Temp - *)
+	Brake + *)
-	Brake - *)
*) Depending on options selected	

2.29 Power connection M40

4.1.2 Hybrid connections (power and encoder)

Hybrid connection I40

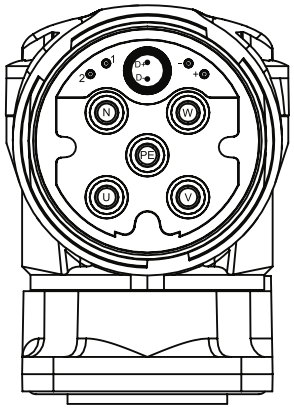

9-pin socket
contacts
for contact 1, 2 ∅ 2 mm
for contact N ... W ∅ x mm

Pin	Des.
U	Phase U
V	Phase V
W	Phase W
PE	PE conductor
D+	Hiperface DSL + / Temp +
D-	Hiperface DSL - / Temp -
+	Brake +
-	Brake -
N, 1, 2	n.c.

2.30 Hybrid connection I40 Hiperface DSL

Hybrid connection I17

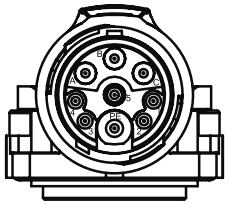

9-pin socket
contacts
for contact: 1 … 5 Ø 1 mm
for contact: PE Ø x mm
for contact: A … C Ø x mm

Pin	Des.
A	Phase U
B	Phase V
C	Phase W
PE	PE conductor
1	Hiperface DSL + / Temp +
2	Hiperface DSL - / Temp -
3	Brake +
4	Brake -
5	n.c.

2.31 Hybrid connection I17 Hiperface DSL

S7 model

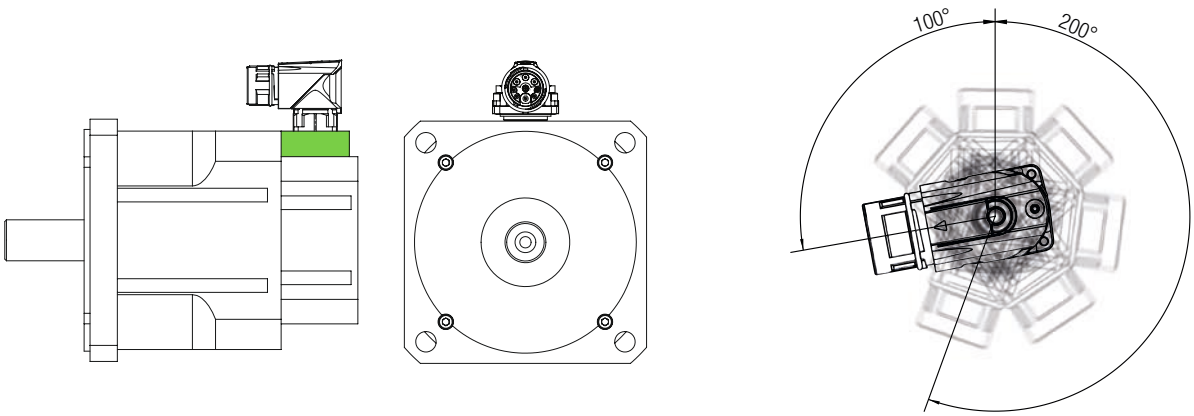

Figure 4.5 Connector, angled/rotating to the D-end

NOTE:

Depending on the size, raised bodies (green in the figure) are used for angled / rotating connectors with an angle of rotation of 300°.

4.1.3 Cable glands

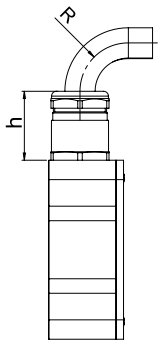

	LSx-050	LSx-074	LSx-097
Minimum bending radius R in mm (fixed laying)	25	30	30
Minimum bending radius R in mm (laying with movement)	37.5	45	45
Height h in mm (max.)	28.5	28.5	28.5

5 Servomotor accessories

NOTE:
For data on the encoder and motor cables, refer to the cable catalogue ID no. 0966.24B.0-00.

Space for your notes

6 Appendix

6.1 Holding brake

The backlash-free, permanently excited, single-face holding brake operates based on the closed circuit principle; this means that power needs to be applied to the brake to release it.
For optimal holding torque and the lowest possible torsional backlash, the holding brake on all LSx motors is attached directly behind the flange (whether on the D or N-end is dependent on the size and encoder selection).
The holding brake is, in principle, switched on and off at standstill. If the holding brake is used as an emergency stop brake, attention must be paid to the maximum permissible friction work (W_R).

NOTE: If the brake is operated as an emergency stop brake, the braking torque can be significantly lower than the holding torque.

6.1.1 Response times of holding brakes

Extremely short overrun is achieved with switching on the DC-side between the rectifier and coil.
For drives that require precise braking, in particular drives for hoists, DC-side switching of the brake is necessary.

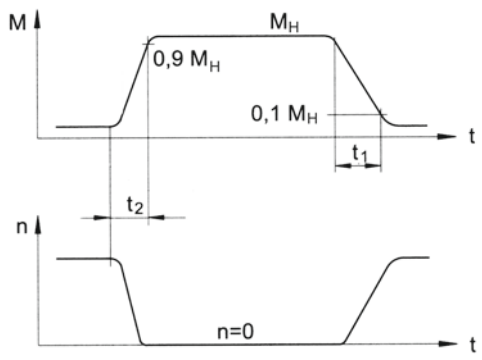

Letter	Meaning
M	Braking torque
M_H	Holding torque of the spring-operated brake
N	Speed
t	Time
t_1	Switch-on time
t_2	Switch-off time

6.1.2 Technical data for holding brake

Letter	Meaning
t_1	Switch-on time
t_2	Switch-off time
M_H	Holding torque or also friction torque of the spring-operated brake (break-away torque)
I_N	Excitation current at 20 °C for releasing
U_N	DC voltage for releasing

Letter	Meaning
n_{max}	Maximum speed (unbraked)
m	Mass (weight)
W_R	Permissible friction work up to 0.1 mm abrasion (for emergency stop)
J_B	Moment of inertia of the holding brake

Size	t_1 [ms]	t_2 [ms]	M_H [Nm]	I_n [A] At 24 V	U_N [V]	n_{max} [min^{-1}]	m [kg]	W_R [10^6 Ws]	J_B [kgcm^2]
LST-037	6	10	0.4	0.33	24 V ± 10%	10,000	0.075	0.20	0.013
LSx-050	6	25	2.0	0.46	24 V ± 10%	10,000	0.15	0.41	0.07
LSx-074	7	35	4.5	0.5	24 V ± 10%	10,000	0.3	0.58	0.18
LSx-097	7	40	9.0	0.75	24 V ± 10%	10,000	0.82	0.89	0.54
LSx-127	10	50	18.0	1.0	24 V ± 10%	10,000	1.8	1.29	1.66
LSx-158	22	90	36	1.1	24 V ± 10%	10,000	2.85	2.90	5.56
LSx-190	22	90	36	1.1	24 V ± 10%	8,000	3.25	2.9	6.2
LST-220	65	105	145	2.1	24 V ± 10%	8,000	9.5	13	56

Table 6.1 Technical data for holding brake

NOTE:
The values **m** and **J_B** are purely brake data. The mass and moment of inertia or the motor shaft are not taken into account.

6.2 External fans



The following external fans are available for attachment at the customer to LSN and LST servomotors with option FL (external fan).
In this way the rated torque of the motors can be increased by up to 25%.
It is not possible to increase the peak torque of the motors.
For this purpose, please also load the appropriate data set into the drive controller or modify the data set as appropriate
Select the external fan according to the voltage class required.
Make sure the necessary current can be provided.
Please check the necessary space requirements (width and length) as per the following drawings. All parts necessary for attachment are included with the external fan.

6.2.1 Connection diagram assignments

230 VAC version

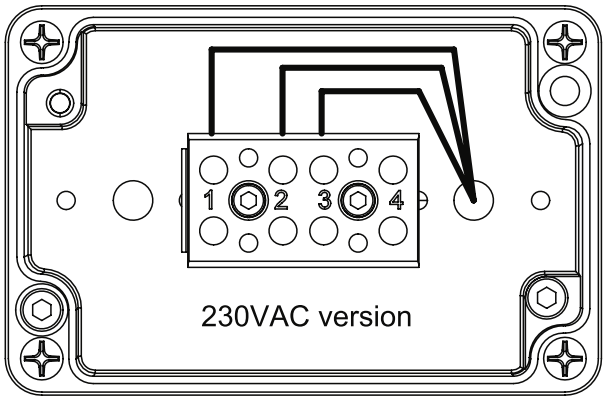

Pin	Signal	Colour
1	L1	grey
2	N	grey
3	PE	green/yellow
4	n.c.	n.c.

Table 6.2 Pin assignment, 230 VAC version

24 VDC version

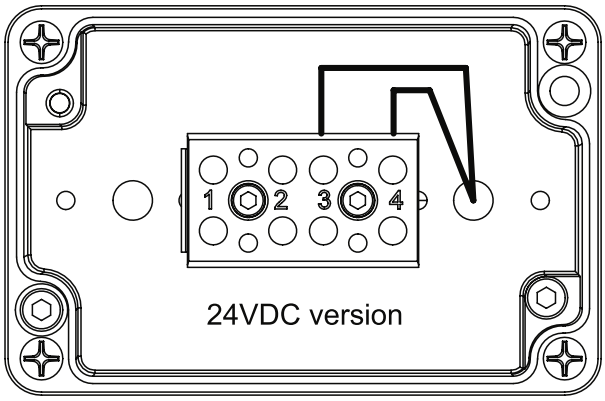

Pin	Signal	Colour
1	n.c.	n.c.
2	n.c.	n.c.
3	+24 VDC	red
4	GND	black

Table 6.3 Pin assignment, 24 VDC version

6.2.2 Technical data for fan units

Type	KEBA art. no.	Degree of protection[1)]	U_N [V]	f_N [Hz]	I_N [A]	L_P [dB(A)]	m_L [kg]
Fan LSx 097	0827.010.0	IP20	220 - 240	50/60	0.14/0.12	44/49	1.6
Fan LSx 127	0827.011.0	IP20	220 - 240	50/60	0.14/0.12	44/49	1.7
Fan 158	0827.012.0	IP20	220 - 240	50/60	0.14/0.12	44/49	2.7
Fan LSx 190	0827.013.0	IP20	220 - 240	50/60	0.14/0.12	44/49	2.7
Fan LST 220 BG 1-3	0827.014.0	IP20	220 - 240	50/60	0.24/0.48	44/49	2.75
Fan LST 220 BG 3+B / BG 4	0827.015.0	IP20	220 - 240	50/60	0.24/0.48	44/49	3.3
Fan LSx 097 – 24 VDC	0827.017.0	IP20	24	DC	0.4	48	1.25
Fan LSx 127 – 24 VDC	0827.018.0	IP20	24	DC	0.4	48	1.35
Fan LSx 158 – 24 VDC	0827.019.0	IP20	24	DC	0.4	48	2.4
Fan LSx 190 – 24 VDC	0827.020.0	IP20	24	DC	0.4	48	2.4
Fan LST 220 BG 1-3 – 24 VDC	0827.021.0	IP20	24	DC	0.4	48	2.1
Fan LST 220 BG 3+B / BG 4 – 24 VDC	0827.016.0	IP20	24	DC	0.4	48	2.65

1) Stated degree of protection applies to the fan motor

Table 6.4 Technical data for fan units

6.2.3 External fan LSx 097



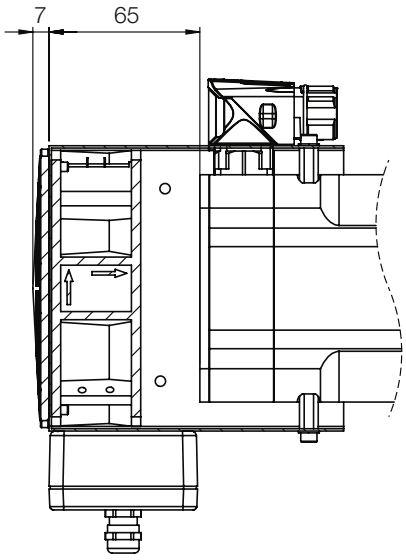

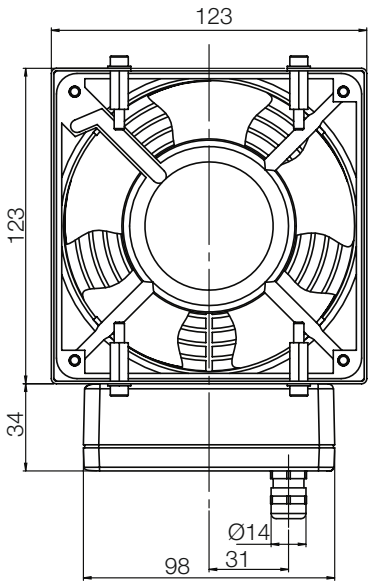

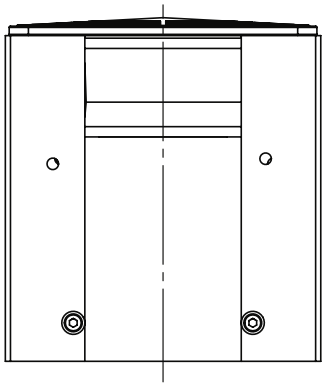

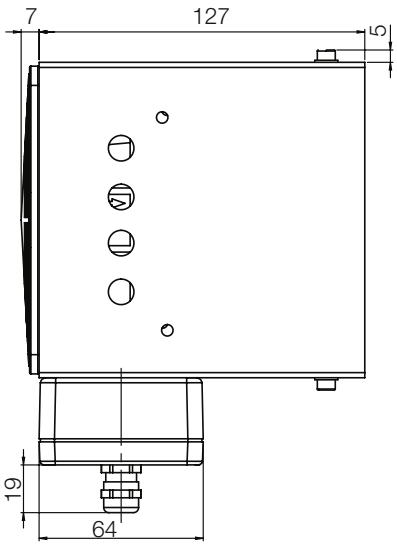

6

6.2.4 External fan LSx 127



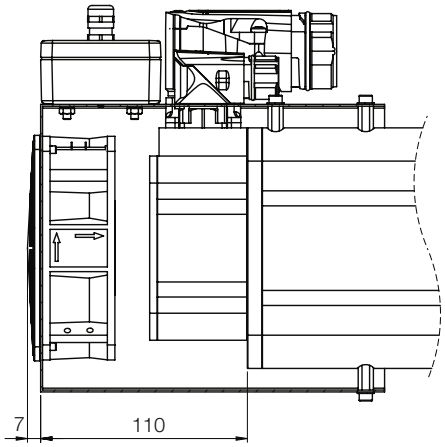

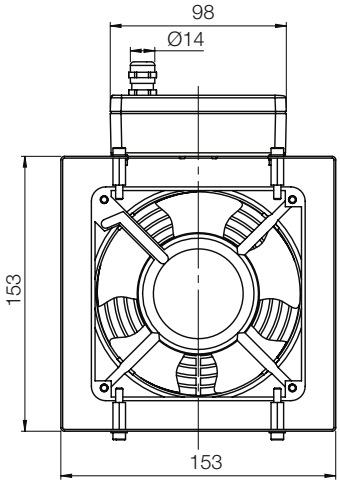

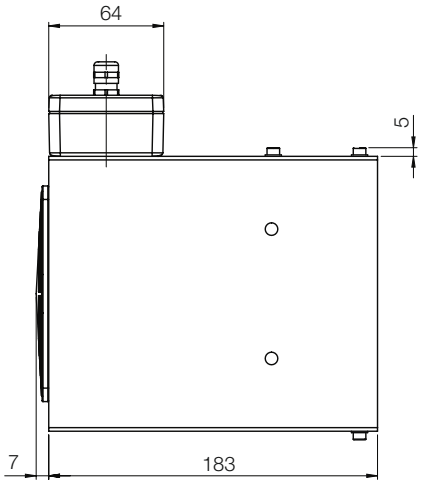

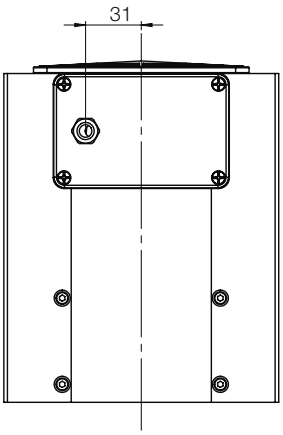

6.2.5 External fan LSx 158



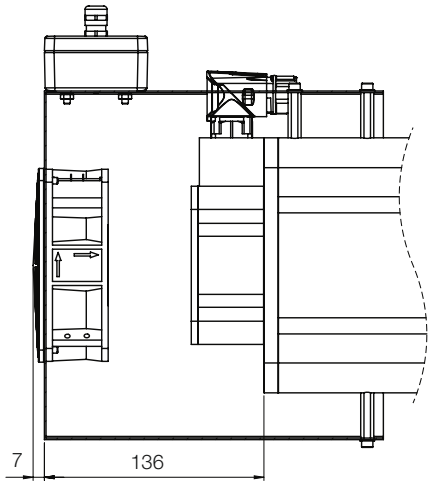

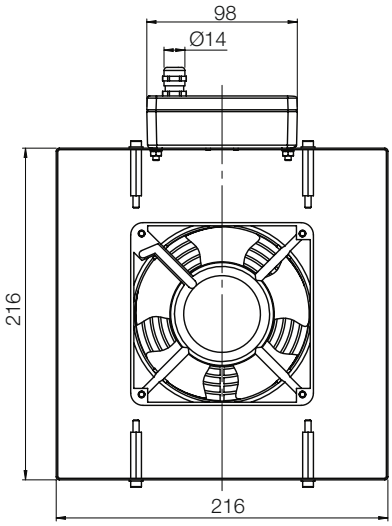

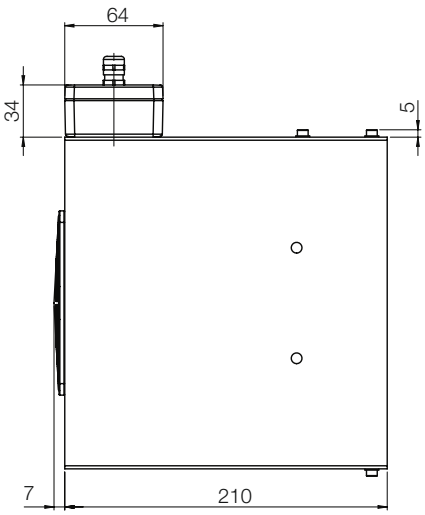

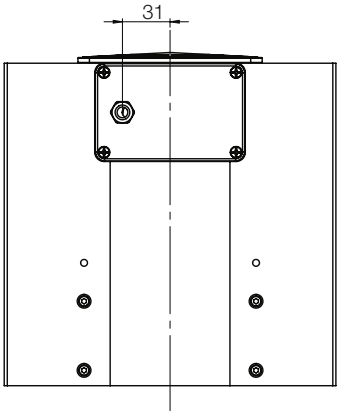

6.2.6 External fan LSx 190



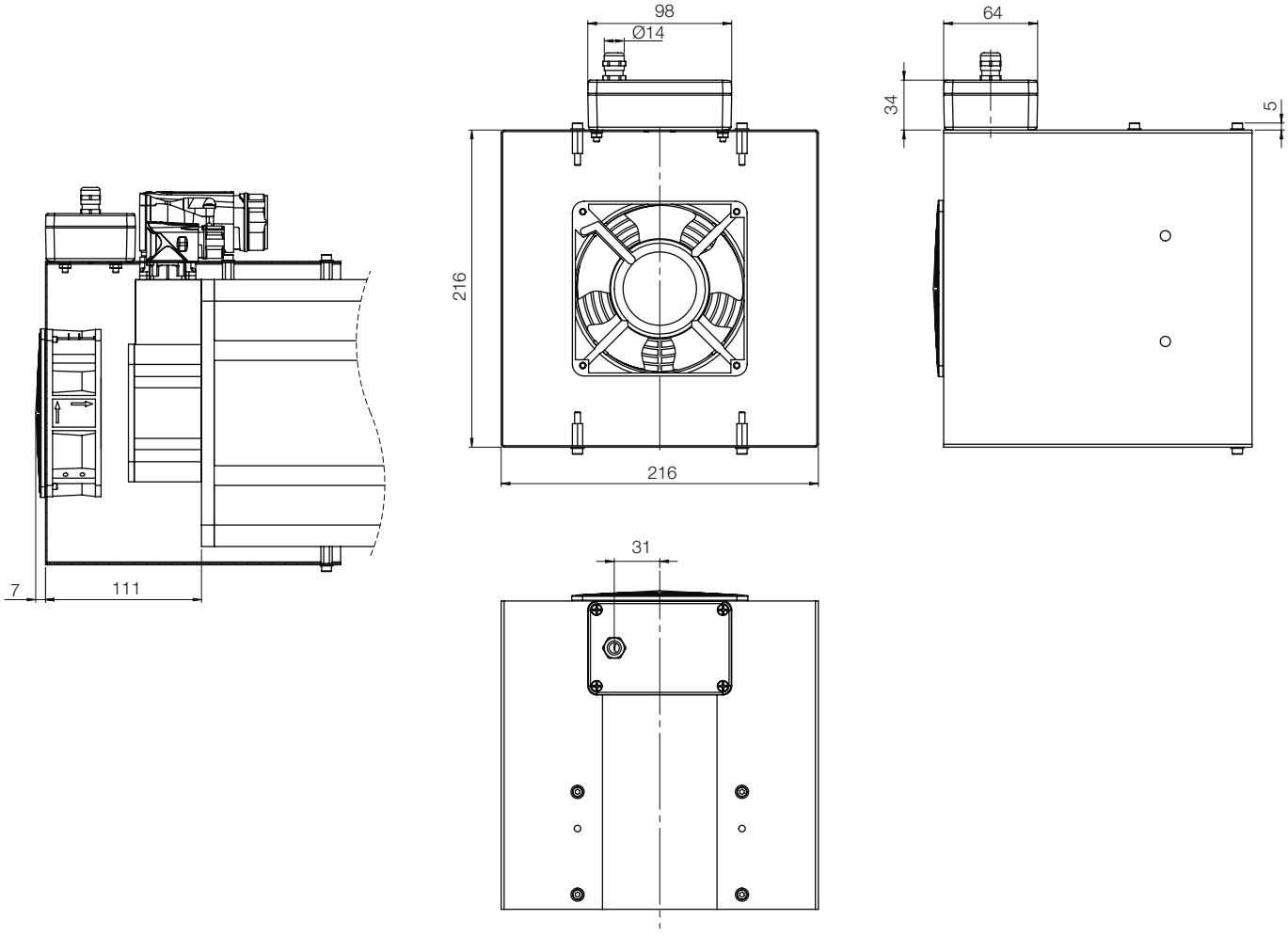

6.2.7 External fan LST 220 BG 1-3



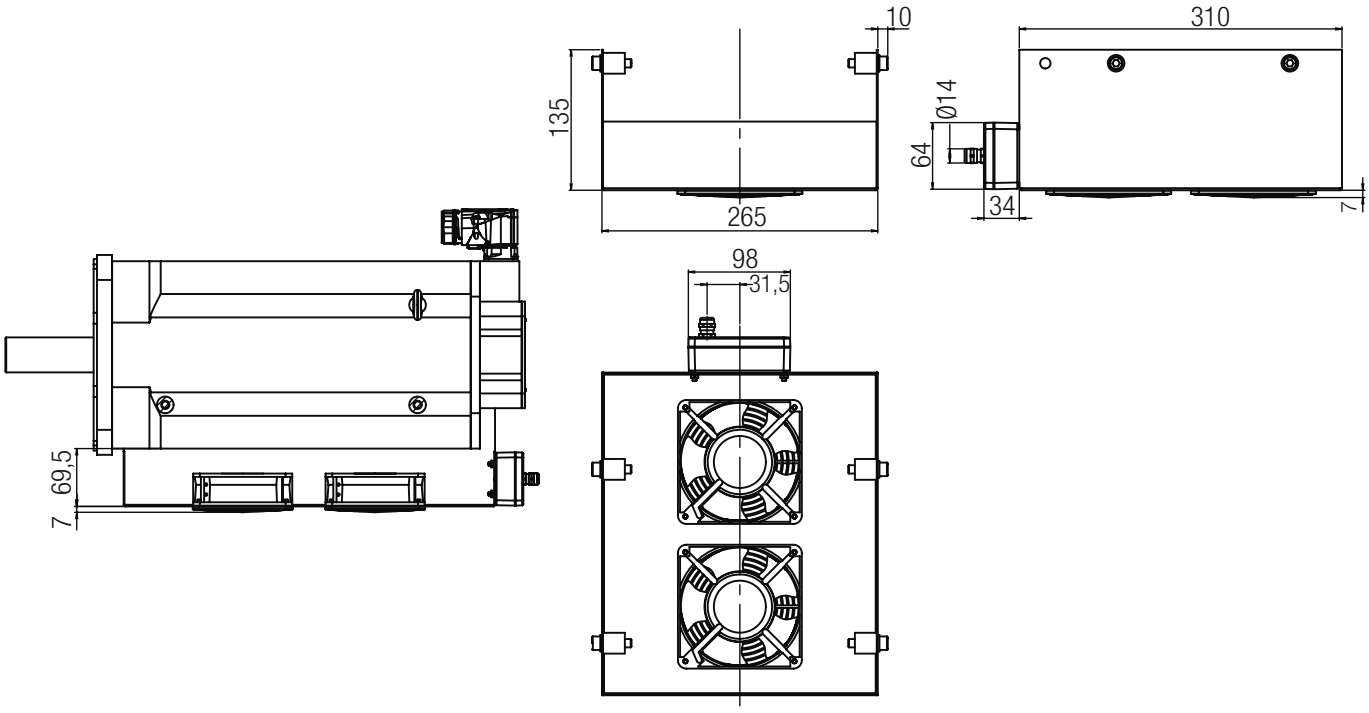

6.2.8 External fan LST 220 BG 3+B / BG 4



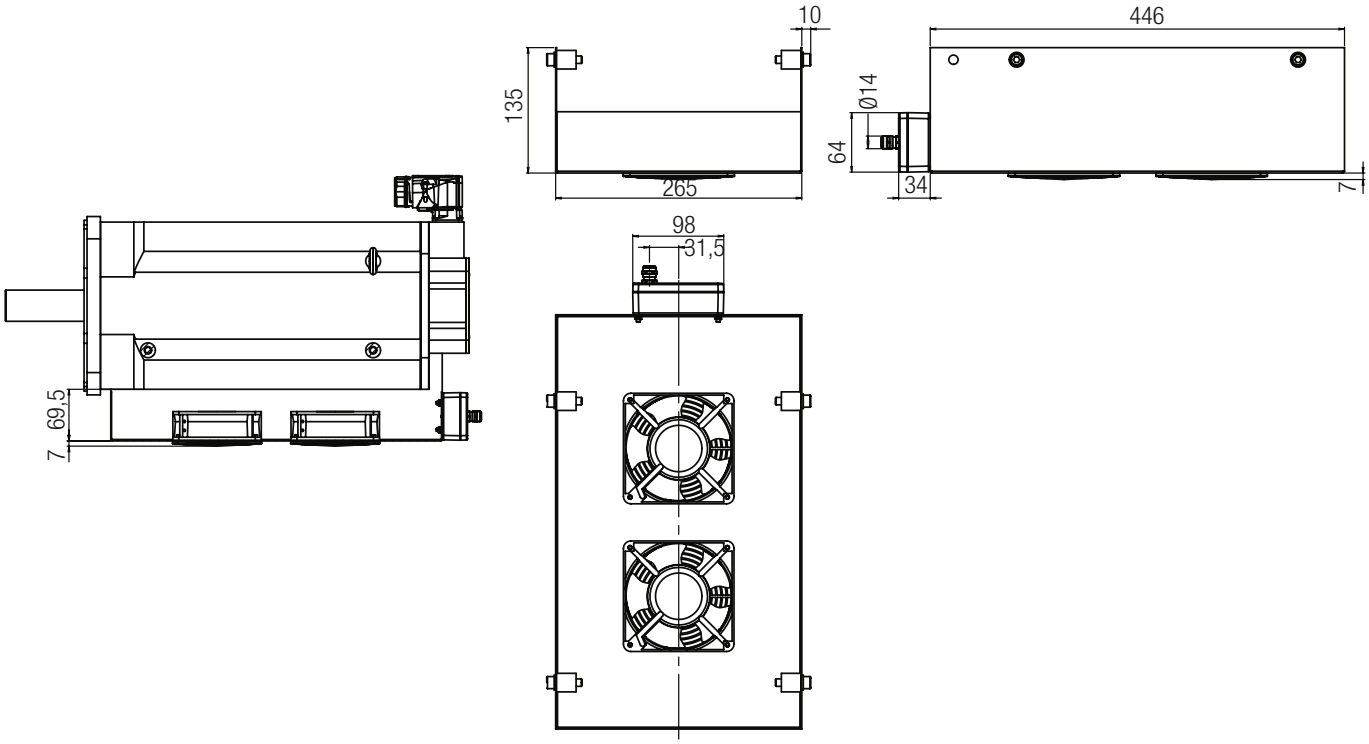

7 ATEX

Explosion-protected servomotors

Motors with the ATEX option can be used in atmospheres with explosive air-gas or air-dust mixtures in category 3. In relation to their safety requirements, the servomotors are classified in equipment group II. Stated simplified: you can use these explosion-protected motors in category 3, in gas zone 2 and in dust zone 22.

Marking according to ATEX directive

II 3G Ex nA T155°C X

CE marking	Meaning
II	Equipment group II: the device is suitable for all areas with a potentially explosive atmosphere except mine workings susceptible to firedamp
3	Equipment category 3: the device is only suitable for a potentially explosive atmosphere due to gas or dust that only occurs infrequently and briefly
G	G = Gas
Ex	European standard for explosion protection has been applied
n	Type of protection n: the requirements of EN 60079-15 for the infrequent and brief occurrence of an explosive atmosphere are met.
A	Non-sparking equipment
T155°C	Maximum surface temperature inside and outside the device where an explosive gas can occur
	"Special conditions" marking: see notes on the test number

Table 7.1 Explanation of terms for ATEX marking

7.1 Declaration of conformity with explosion protection

EU-Konformitätserklärung

EU Declaration of Conformity

KEBA
Automation by innovation.

Der Hersteller *The manufacturer*	KEBA Industrial Automation Germany GmbH Gewerbestraße 5-9 35633 Lahnau Deutschland

erklärt in alleiniger Verantwortung hiermit, dass die folgenden Produkte
declares under sole responsibility, that the following products

Produktbezeichnung: *Product designation:*	Synchron-Servomotor *Synchronous Servomotor*

mit Explosionsschutz nach Richtlinie 2014/34 EU Gerätegruppe II, Gerätekategorie 3G und 3D
with explosion protection by Directive 2014/34 EU device group II, device category 3G and 3D

Produkttypen: *Product types:*	LST, LSN mit Option E *LST, LSN with Option E*

den Sicherheitsbestimmungen der nachstehenden EU-Richtlinie entsprechen:
comply with the essential requirements of the following EU Directive:

2014/34/EU *2014/34/EU*	ATEX - Geräte und Schutzsysteme zur Verwendung in explosionsgefährdeten Bereichen *ATEX - equipment and protective systems intended for use in potentially explosive atmospheres*

und dass folgende angeführte Normen angewandt wurden:
and that the following standards has been applied:

EN 60079-0:2012
Explosionsgefährdete Bereiche — Teil 0: Betriebsmittel - Allgemeine Anforderungen
Explosive atmospheres – Part 0: Equipment- General requirements

EN 60079-15:2010
Explosionsfähige Atmosphäre — Teil 15: Geräte-schutz durch Zündschutzart „n"
Explosive atmospheres - Part 15: Equipment protection by type of protection "n"

EN 60079-31:2014
Explosionsgefährdete Bereiche — Teil 31: Geräte- Staubexplosionsschutz durch Gehäuse „t"
Explosive atmospheres - Part 31: Equipment dust ignition protection by enclosure "t"

Unterzeichnet für und im Namen von KEBA Industrial Automation Germany GmbH.
Signed for and on behalf of KEBA Industrial Automation Germany GmbH.

Unterschrift / *signature:*	i.V. J. Albach	Dr. Josef Wiesing
Name / *name:*	Joachim Albach	Dr. Josef Wiesing
Stellung / *position:*	Leiter Produkt- und Projektmanagement Head of Product – and Projectmanagement	Geschäftsführer *Managing Director*
Datum / *date:*	30.04.2020	30.04.2020
Ort / *place:*	Lahnau	Lahnau
Land / *country:*	Deutschland	Deutschland

Die deutschsprachige Version dieses Dokumentes ist die Originalversion, alle anderssprachigen Versionen wurden aus dem Original-Text übersetzt.
The German-language version of this document is the original version, all other language versions have been translated from the original text.

Dokument: 0970.0DK.EX-02

FB 0018 EU-Konformitätserklärung NSRL/EMV 2020/03 K

Space for your notes

Space for your notes

Date: 11/2022 • ID no.: 0814.25B.8-00

Fit for the future with bundled competencies

KEBA is an internationally successful electronics business based in Linz/ Austria with subsidiaries worldwide. Based on the motto "Automation by innovation." KEBA has for 50 years developed and manufactured innovative automation solutions of the highest quality for a very wide range of sectors.

www.keba.com

KEBA Industrial Automation Germany GmbH, Gewerbestrasse 5-9, 35633 Lahnau, telephone: +49 6441 966-0, fax: +49 6441 966-137, info@keba.de

KEBA Group worldwide
China • Germany • India • Italy • Japan • Netherlands
Austria • Romania • Switzerland • South Korea • Taiwan
Czech Republic • Turkey • USA

Copyright © Keba 2022 All rights reserved.
All content of the documentation, in particular the text, photographs and graphics it contains are protected by copyright.
The copyright lies, unless otherwise expressly stated, with KEBA Industrial Automation Germany GmbH.

KEBA®
Automation by innovation.