KeDrive DMS2
Synchronous Motors



KEBA
Automation by innovation.

KeDrive DMS2 – Overview

	Page
Introduction Synchronous Motors	4
Synchronous Motors	
KeDrive DMS2-040	6
KeDrive DMS2-058	8
KeDrive DMS2-070	10
KeDrive DMS2-091	12
KeDrive DMS2-100	14
KeDrive DMS2-142	16
KeDrive DMS2-190	20
KeDrive DMS2-240	24
KeDrive DMS2-270	28
Overview Motor Lengths	30

The KeDrive DMS2 synchronous servomotors are suitable for almost all servo applications in automation.

The high torque density permits a particularly compact design with maximum torque up to 1150 Nm.

Everything from analogue encoder through to modern, digital safety encoder are available, depending on the requirements for precision and safety technology. With the high-resolution Hiperface DSL encoders safe high-performance applications can be realized with just one cable.

The digital encoders are available both in single-turn and in multi-turn versions. The electronic nameplate with parameter memory permits problem-free commissioning of the drive system. The motors attain protection rating IP65 as standard thanks to being fitting with a shaft sealing ring.


KEBA
KEBA
KEBA

KeDrive DMS2
Synchronous Motors

Overview

// Maximum reliability
// High overload capacity
// Low torque ripple
// One common cable for power supply and encoder signal

Brief description

The KEBA servomotors of the series DMS2 fulfill the highest standards of accuracy and of smooth running and are characterized particularly by a wide power spectrum and a wide speed range. The fine graduation of torque and speed over 9 flange sizes allows optimum motor dimensioning for each application. The high torque density makes the motor compact and dynamic.

The moments of inertia are adapted especially for robotics and motion applications and therefore allow an optimal control mode, especially for linked axes.

Depending on the application, the motors can be customized in a variety of possible options specifically to the respective needs. Depending on the required positioning accuracy the motors can be delivered with several encoder types. From flange size 142 onwards, forced air ventilation is available as an option. This increases the stall torque by approx. 1/3 and the rated power by 30% to 150% depending on the type.

Motor
DMS2-058-0007-60
DMS2-058-0012-60
DMS2-070-0024-60
DMS2-091-0035-30
DMS2-091-0035-60
DMS2-100-0060-45
DMS2-100-0100-30
DMS2-100-0100-60
DMS2-142-0125-45
DMS2-142-0200-30
DMS2-142-0260-30

Preferred types

Very short delivery times are possible with a series of preferred types. These preferred types are selected motor types, which are best matched to the KeDrive D3-DA servo controllers up to the medium power range. **(P).**

Type Code

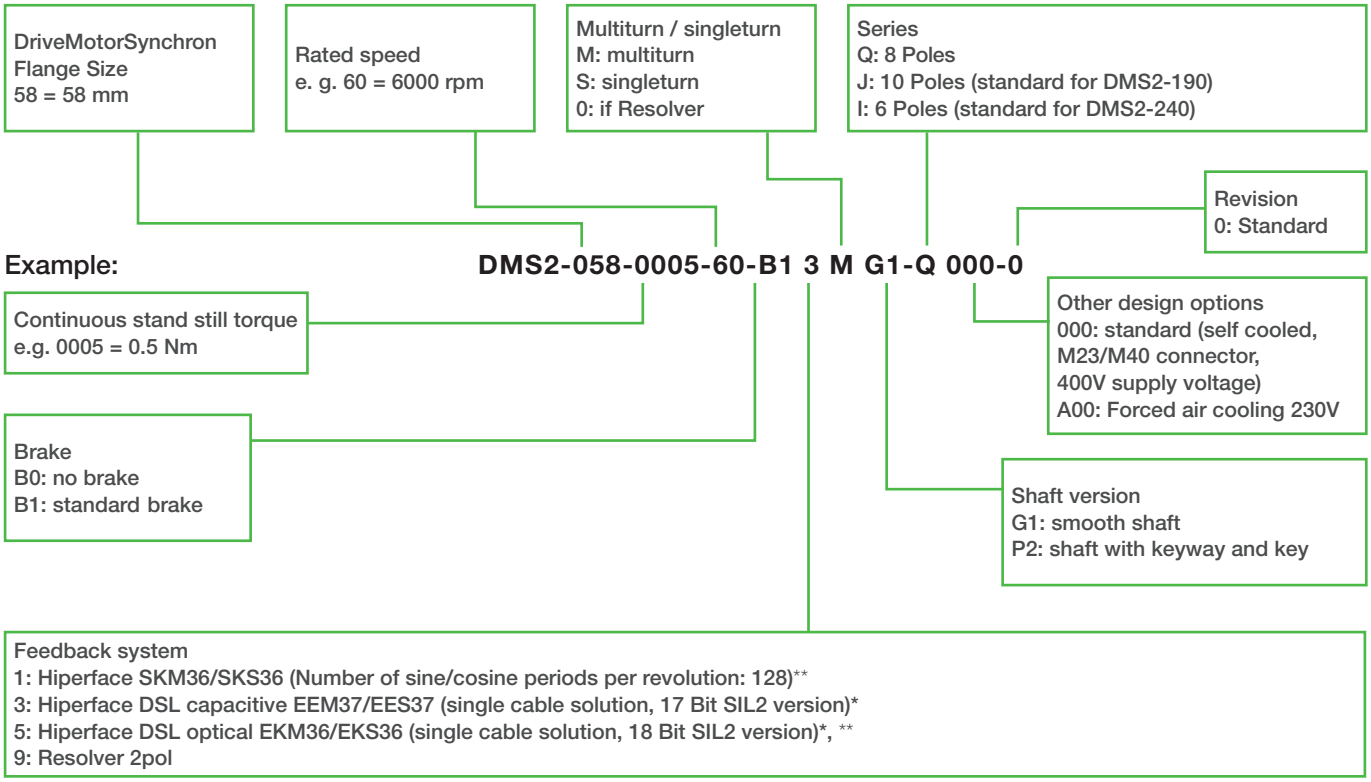

* available till DMS2-190
** not available at DMS2-040

Other available options:

// reinforced bearings
// smaller plugs
// different shaft designs
// forced air cooling
// water cooling
// ATEX etc.

Symbols and abbreviations

Symbol	Description
P_N	Rated power
T_N	Rated torque
n_N	Rated speed
T_0	Stall torque
T_{max}	Peak torque
I_N	Rated current
I_0	Stall current
I_{max}	Peak current
J	Moment of inertia
L	Length
m	Weight

KeDrive DMS2-040
Synchronous Motors

Flange Dimension 40 mm											
	P_N kW	T_N Nm	n_N rpm	T_0 Nm	T_{max} Nm	I_N A_{rms}	I_0 A_{rms}	I_{max} A_{rms}	J*) $kgcm^2$	L**) mm	m***) kg
DMS2-040-0003-60	176	0.28	6000	0.32	1.0	0.6	0.68	2.5	0.03	103 (126)	0.5

*) With brake the moment of inertia is higher by 0.013 $kgcm^2$
**) Lengths refer to encoder option 3: Hiperface DSL EES37/EEM37 without brake (or B1: with brake); an overview of all lengths is on p. 26
***) With brake approx. 0.1 kg more weight

Dimensions DMS2-040

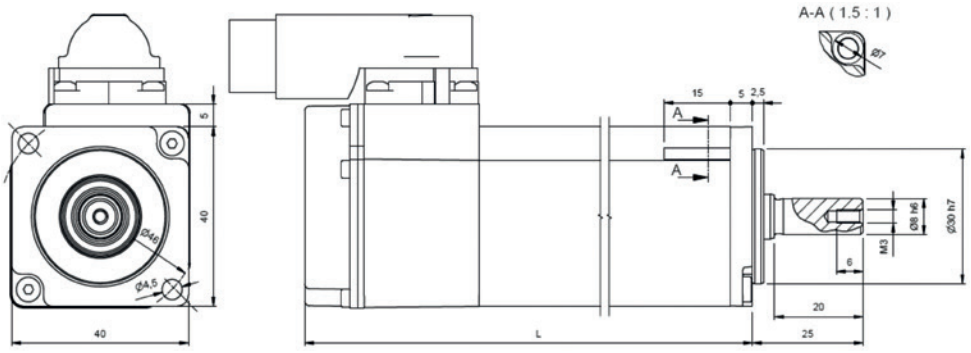

Motor characteristics DMS2-040-0003

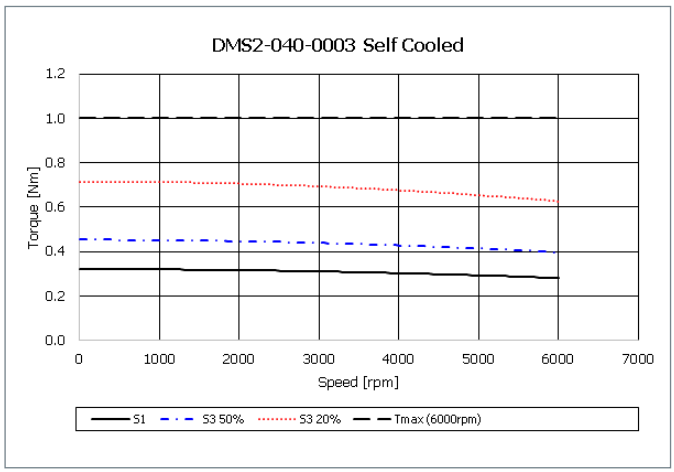

KeDrive DMS2-058
Synchronous Motors

Flange Dimension 58 mm											
	P_N W	T_N Nm	n_N rpm	T_0 Nm	T_{max} Nm	I_N A_{rms}	I_0 A_{rms}	I_{max} A_{rms}	J*) kgcm²	L**) mm	m***) kg
DMS2-058-0007-30	229.3	0.73	3000	0.75	3.0	0.50	0.52	2.4	0.19	131 (161)	1.5
DMS2-058-0010-30	304.7	0.97	3000	1.00	4.0	0.67	0.69	3.2	0.25	143 (173)	1.7
DMS2-058-0012-30	380.1	1.21	3000	1.25	5.0	0.83	0.86	4.0	0.31	155 (185)	2.0
DMS2-058-0002-60	151	0.24	6000	0.25	1.0	0.33	0.34	1.6	0.07	107 (137)	1.0
DMS2-058-0005-60	295	0.47	6000	0.50	2.0	0.65	0.69	3.2	0.13	119 (149)	1.2
DMS2-058-0007-60 (P)	440	0.70	6000	0.75	3.0	0.96	1.03	4.8	0.19	131 (161)	1.5
DMS2-058-0010-60	584	0.93	6000	1.00	4.0	1.28	1.37	6.4	0.25	143 (173)	1.7
DMS2-058-0012-60 (P)	729	1.16	6000	1.25	5.0	1.59	1.72	8.0	0.31	155 (185)	2.0

*) With brake the moment of inertia is higher by 0.12 kgcm²
**) Lengths refer to encoder option 1, 3, 5 and B0: without brake (or B1: with brake); an overview of all lengths is on p. 26
***) With brake approx. 0.5 kg more weight

Dimensions DMS2-058

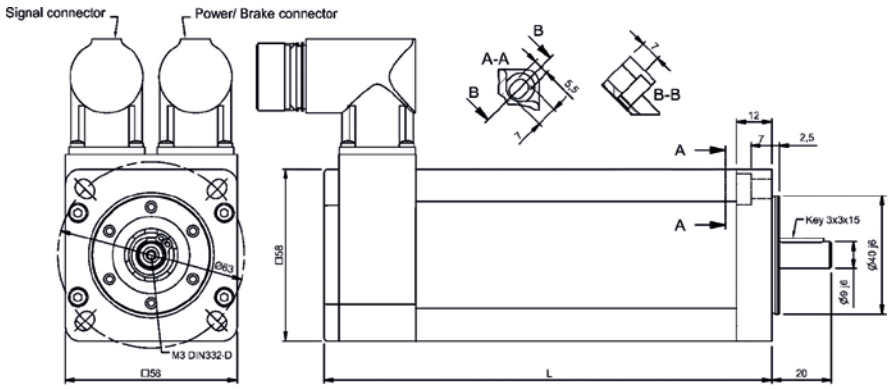

Motor characteristics DMS2-058-0002

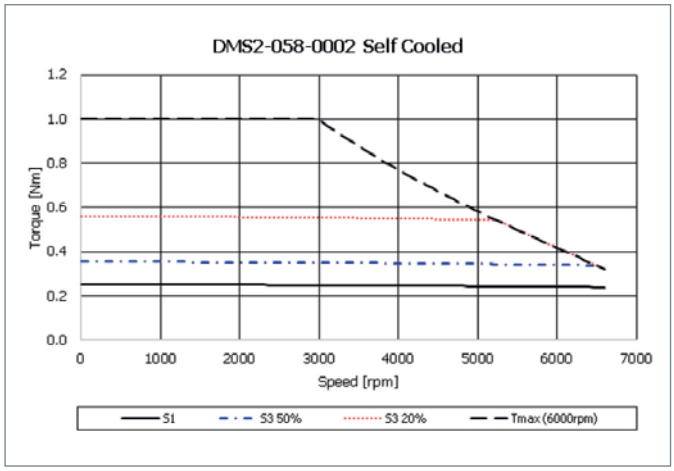

Motor characteristics DMS2-058-0005

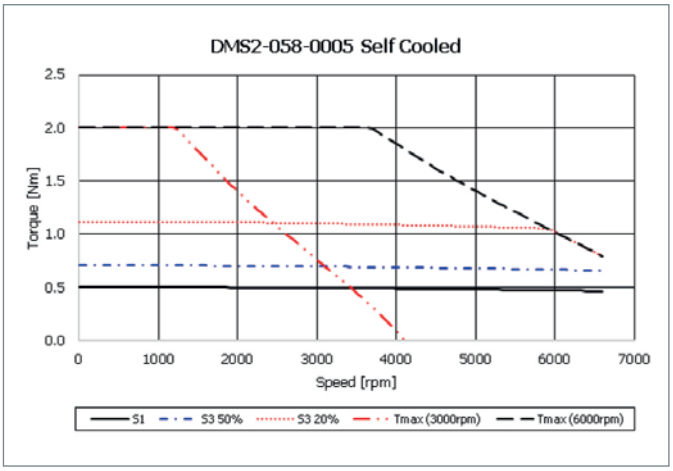

Motor characteristics DMS2-058-0007

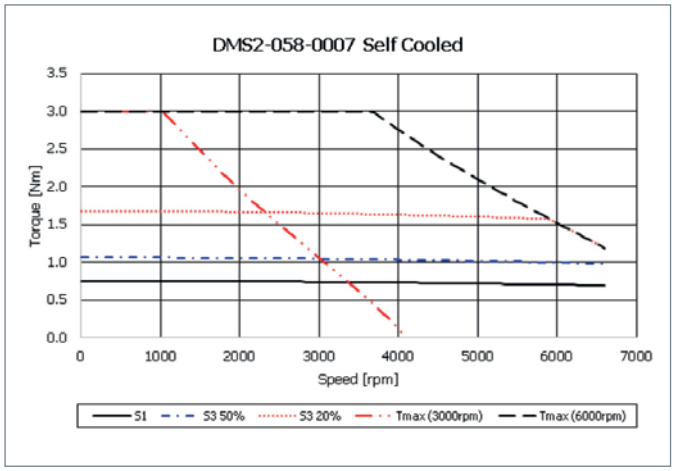

Motor characteristics DMS2-058-0010

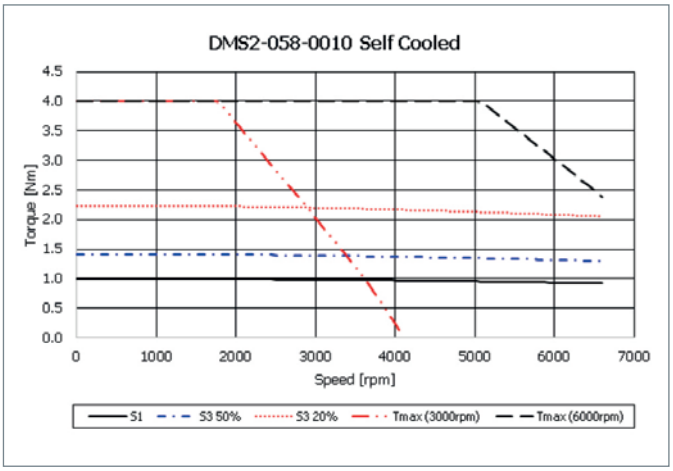

Motor characteristics DMS2-058-0012

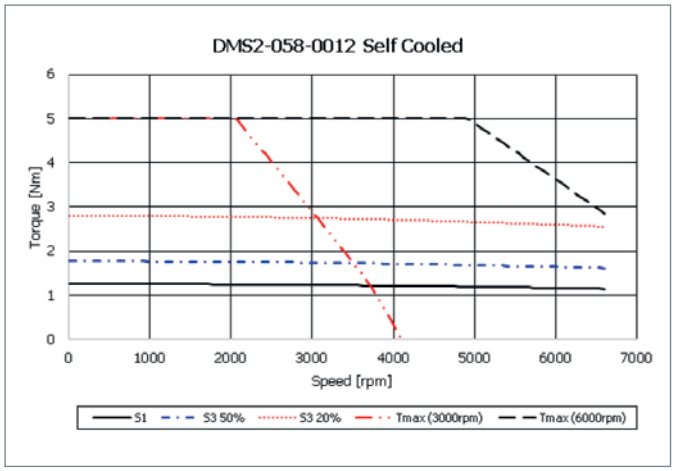

KeDrive DMS2-070
Synchronous Motors

Flange Dimension 70 mm											
	P_N kW	T_N Nm	n_N rpm	T_0 Nm	T_{max} Nm	I_N A_{rms}	I_0 A_{rms}	I_{max} A_{rms}	J*) $kgcm^2$	L**) mm	m***) kg
DMS2-070-0006-30	172.8	0.55	3000	0.6	2.1	0.4	0.4	1.8	0.25	123 (158)	2.0
DMS2-070-0012-30	345.6	1.1	3000	1.2	4.2	0.8	0.8	3.6	0.44	138 (173)	2.2
DMS2-070-0018-30	518.4	1.65	3000	1.8	6.3	1.1	1.2	5.4	0.63	153 (188)	2.6
DMS2-070-0024-30	691.2	2.2	3000	2.4	8.5	1.5	1.7	7.3	1.05	180 (211)	3.6
DMS2-070-0030-30	848.0	2.7	3000	3.0	10.5	1.9	2.1	9.1	1.22	195 (223)	3.8
DMS2-070-0006-60	314.2	0.5	6000	0.6	2.1	0.7	0.8	3.6	0.25	123 (158)	2.0
DMS2-070-0012-60	628.0	1.0	6000	1.2	4.2	1.4	1.6	7.2	0.44	138 (173)	2.2
DMS2-070-0018-60	942.5	1.5	6000	1.8	6.3	2.1	2.5	10.8	0.63	153 (188)	2.6
DMS2-070-0024-60 (P)	1255.0	2.0	6000	2.4	8.5	2.7	3.3	14.7	1.05	180 (211)	3.6
DMS2-070-0030-60	1508.0	2.4	6000	3.0	10.5	3.3	4.1	18.0	1.22	195 (223)	3.8

*) With brake the moment of inertia is higher by 0.38 $kgcm^2$
**) Lengths refer to encoder option 1, 3, 5 and B0: without brake (or B1: with brake); an overview of all lengths is on p. 26
***) With brake approx. 0.6 kg more weight

Dimensions DMS2-070

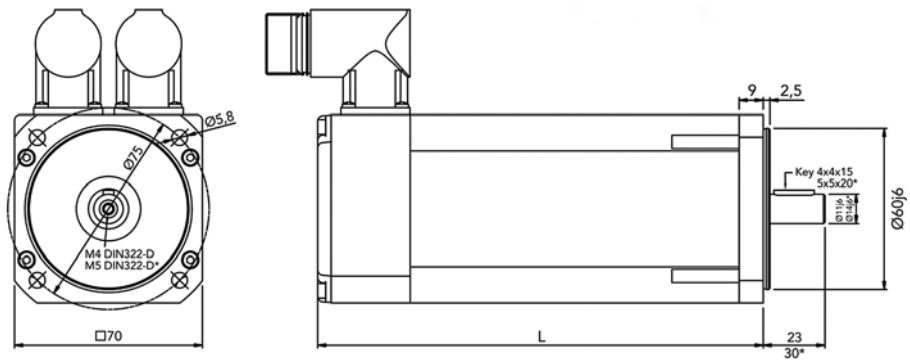

*) Dimensions valid for DMS2-070-0024 and DMS2-070-0030

Motor characteristics DMS2-070-0006

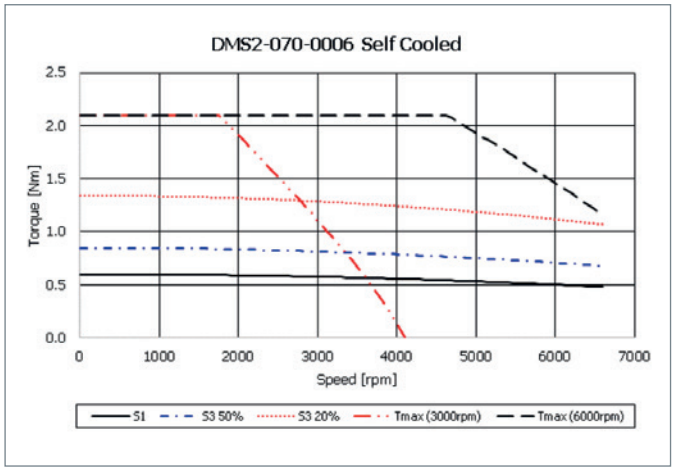

Motor characteristics DMS2-070-0012

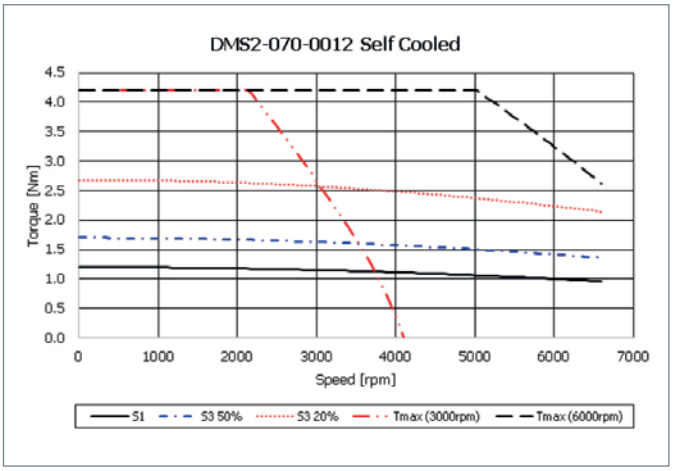

Motor characteristics DMS2-070-0018

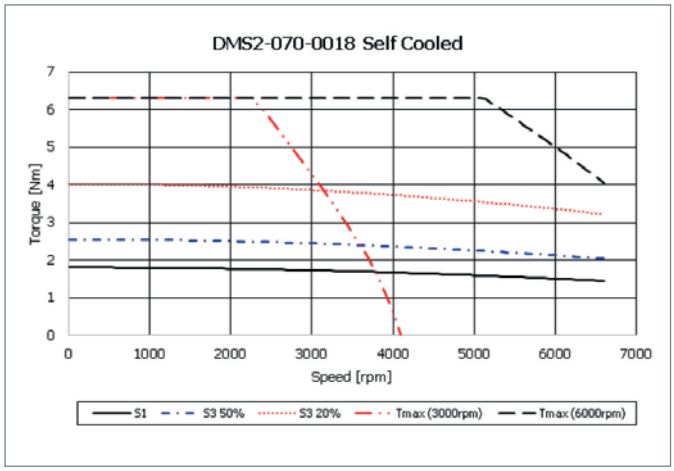

Motor characteristics DMS2-070-0024

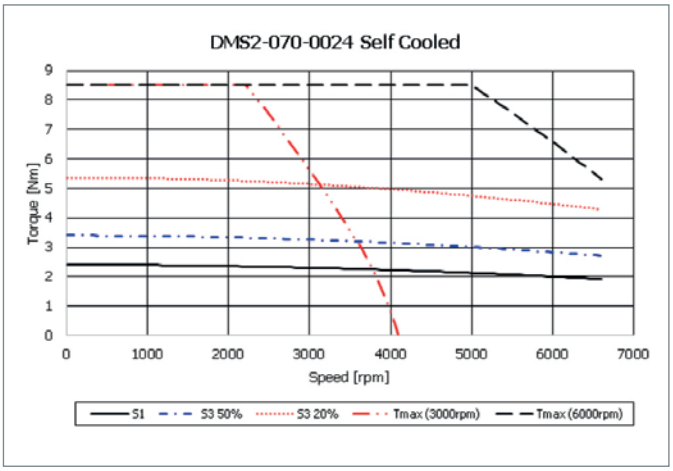

Motor characteristics DMS2-070-0030

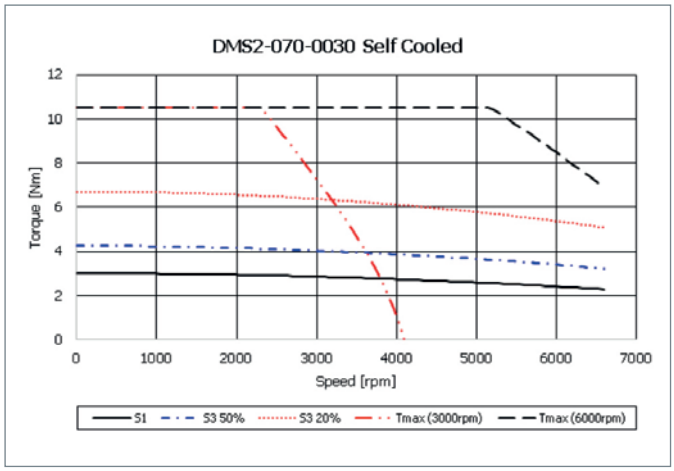

KeDrive DMS2-091
Synchronous Motors

Flange Dimension 91 mm											
	P_N kW	T_N Nm	n_N rpm	T_0 Nm	T_{max} Nm	I_N A_{rms}	I_0 A_{rms}	I_{max} A_{rms}	J*) $kgcm^2$	L**) mm	m***) kg
DMS2-091-0013-30	0.4	1.3	3000	1.35	5	0.8	0.8	3.6	0.47	137 (172)	3.5
DMS2-091-0026-30	0.8	2.5	3000	2.6	10	1.5	1.6	7.1	0.88	159 (194)	4.4
DMS2-091-0035-30 (P)	1.0	3.1	3000	3.5	14	1.9	2.1	10.0	1.09	174 (209)	5.0
DMS2-091-0045-30	1.2	3.9	3000	4.5	18	2.4	2.8	12.7	1.40	194 (229)	5.8
DMS2-091-0013-60	0.6	1.0	6000	1.35	5	1.2	1.7	7.1	0.47	137 (172)	3.5
DMS2-091-0026-60	1.1	1.7	6000	2.6	10	2.1	3.2	14.3	0.88	159 (194)	4.4
DMS2-091-0035-60 (P)	1.3	2.0	6000	3.5	14	2.5	4.3	20.0	1.09	174 (209)	5.0
DMS2-091-0045-60	1.4	2.3	6000	4.5	18	2.8	5.6	25.4	1.40	194 (229)	5.8

*) With brake the moment of inertia is higher by 0.38 $kgcm^2$
**) Lengths refer to encoder option 1, 3, 5 and B0: without brake (or B1: with brake); an overview of all lengths is on p. 26
***) With brake approx. 0.6 kg more weight

Dimensions DMS2-091

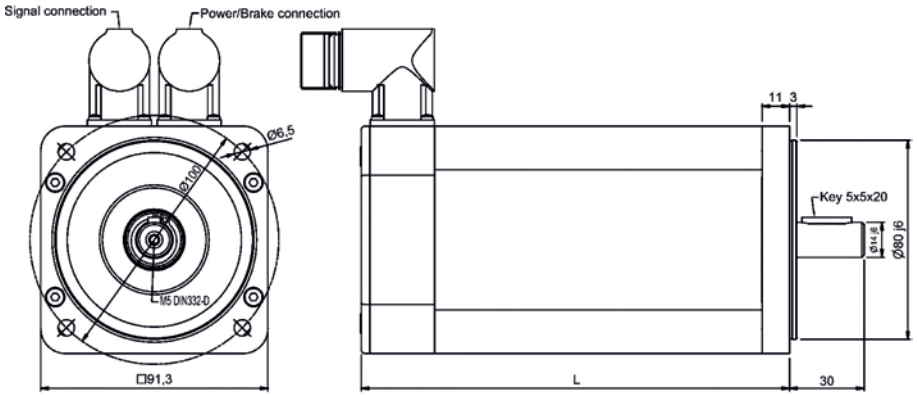

Motor characteristics DMS2-091-0013

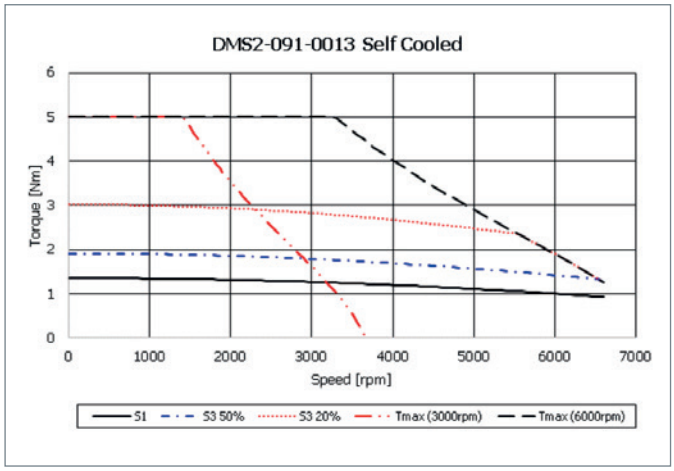

Motor characteristics DMS2-091-0026

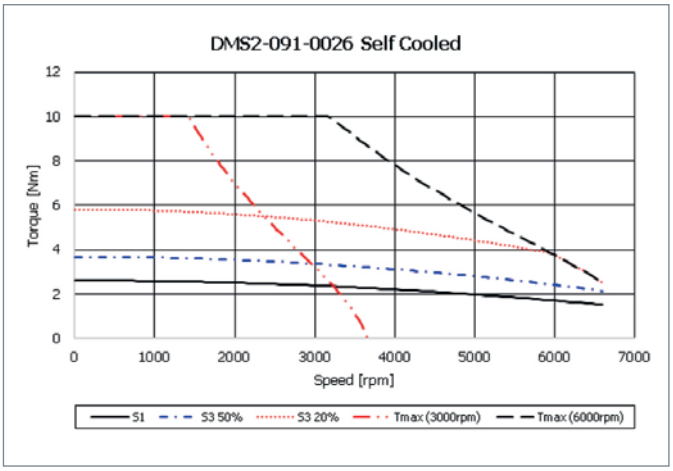

Motor characteristics DMS2-091-0035

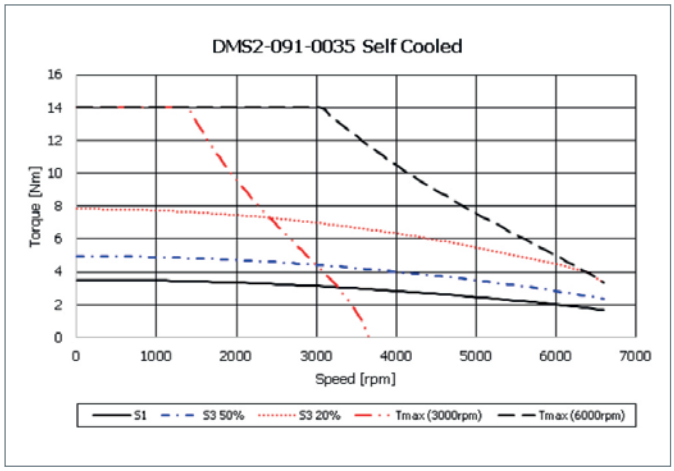

Motor characteristics DMS2-091-0045

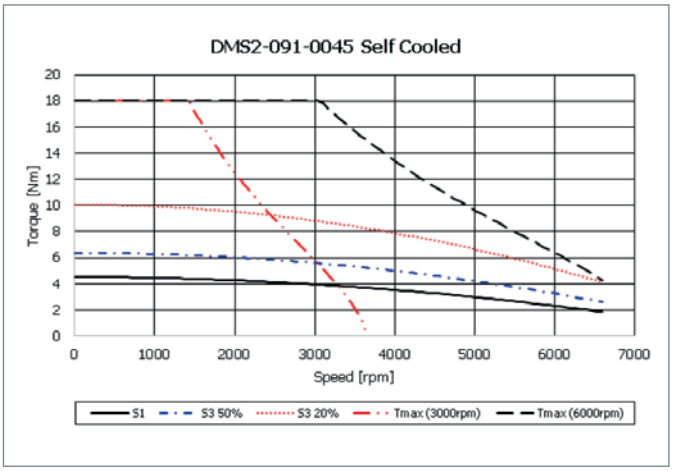

KeDrive DMS2-100
Synchronous Motors

Flange Dimension 100 mm											
	P_N kW	T_N Nm	n_N rpm	T_0 Nm	T_{max} Nm	I_N A_{rms}	I_0 A_{rms}	I_{max} A_{rms}	J*) $kgcm^2$	L**) mm	m***) kg
DMS2-100-0040-30	1.1	3.50	3000	4.0	12	2.1	2.5	11.6	1.87	161 (193)	4.7
DMS2-100-0060-30	1.6	5.25	3000	6.0	18	3.2	3.7	17.4	2.67	181 (213)	5.3
DMS2-100-0080-30	2.4	7.50	3000	8.0	24	4.6	4.9	22.7	3.47	205 (237)	6.2
DMS2-100-0100-30 (P)	2.7	8.75	3000	10.0	30	5.4	6.1	29.0	4.27	225 (257)	7.2
DMS2-100-0040-45	1.5	3.10	4500	4.0	12	2.8	3.7	17.3	1.87	161 (193)	4.7
DMS2-100-0060-45 (P)	2.2	4.65	4500	6.0	18	4.3	5.5	26.0	2.67	181 (213)	5.3
DMS2-100-0080-45	2.9	6.20	4500	8.0	24	5.7	7.4	34.6	3.47	205 (237)	6.2
DMS2-100-0100-45	3.6	7.70	4500	10.0	30	7.1	9.2	43.3	4.27	225 (257)	7.2
DMS2-100-0040-60	1.5	2.40	6000	4.0	12	2.9	4.9	23.2	1.87	161 (193)	4.7
DMS2-100-0060-60	2.3	3.60	6000	6.0	18	4.4	7.4	34.8	2.67	181 (213)	5.3
DMS2-100-0080-60	3.0	4.80	6000	8.0	24	5.9	9.8	46.4	3.47	205 (237)	6.2
DMS2-100-0100-60 (P)	3.8	6.00	6000	10.0	30	7.4	12.3	58.0	4.27	225 (257)	7.2

*) With brake the moment of inertia is higher by 0.54 $kgcm^2$
**) Lengths refer to encoder option 1, 3, 5 and B0: without brake (or B1: with brake); an overview of all lengths is on p. 26
***) With brake approx. 0.6 kg more weight

Dimensions DMS2-100

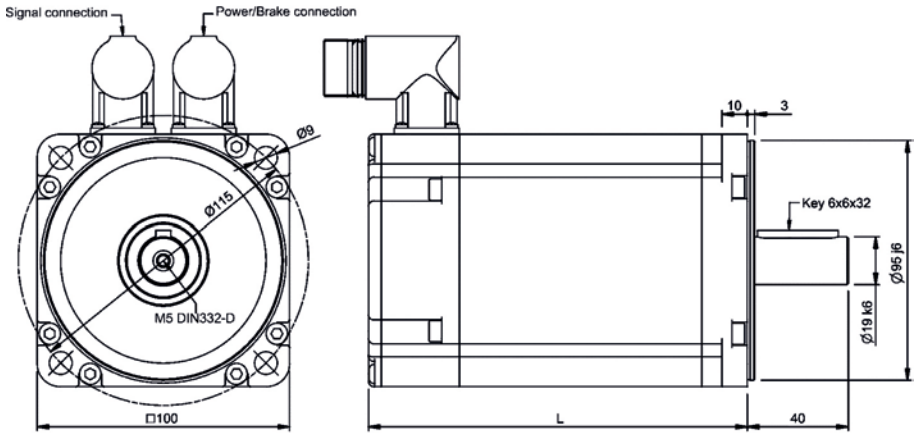

Motor characteristics DMS2-100-0040

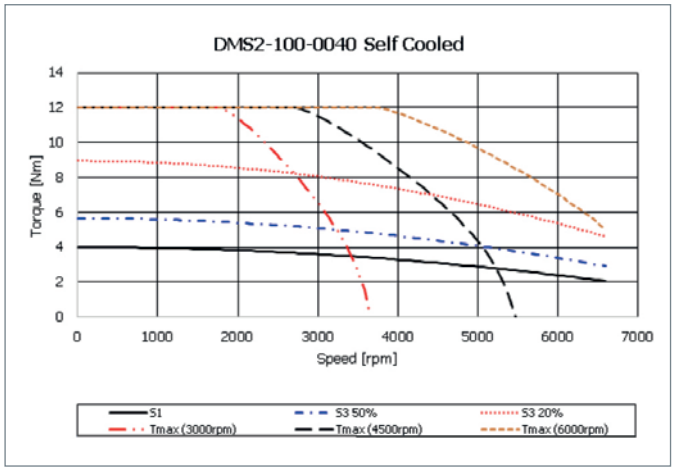

Motor characteristics DMS2-100-0060

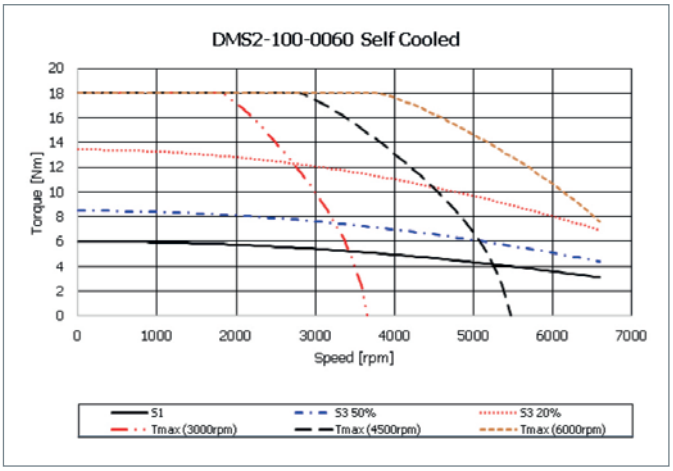

Motor characteristics DMS2-100-0080

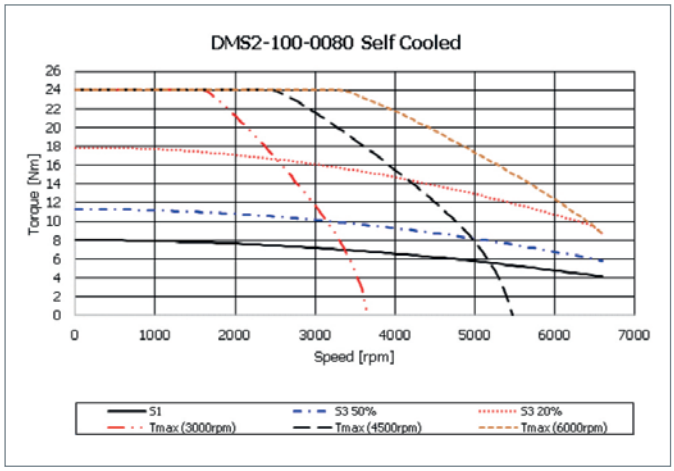

Motor characteristics DMS2-100-0100

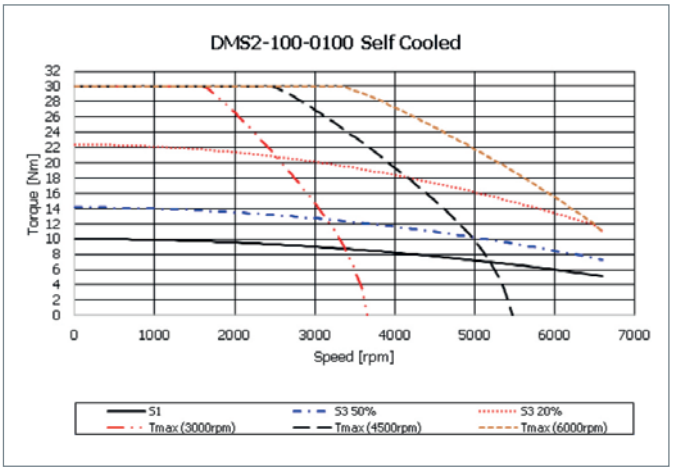

KeDrive DMS2-142
Synchronous Motors

Flange Dimension 142 mm (4.5 Nm – 26 Nm)											
	P_N kW	T_N Nm	n_N rpm	T_0 Nm	T_{max} Nm	I_N A_{rms}	I_0 A_{rms}	I_{max} A_{rms}	J*) $kgcm^2$	L**) mm	m***) kg
DMS2-142-0045-20	0.9	4.2	2000	4.5	13.8	1.7	1.8	6.6	3.6	159 (194)	7.5
DMS2-142-0090-20	1.7	8.1	2000	9.0	27.6	3.3	3.7	13.1	6.0	184 (219)	9.5
DMS2-142-0125-20	2.5	11.8	2000	12.5	41.4	4.8	5.1	19.7	8.2	209 (239)	11.5
DMS2-142-0160-20	3.2	15.1	2000	16.0	55.2	6.2	6.6	26.2	10.7	234 (264)	13.5
DMS2-142-0200-20	3.9	18.5	2000	20.0	69.0	7.6	8.2	34.9	13.1	259 (284)	15.5
DMS2-142-0260-20	4.7	22.4	2000	26.0	96.6	9.2	10.6	45.9	18.4	309 (329)	19.5
DMS2-142-0045-30	1.3	4.0	3000	4.5	13.8	2.5	2.8	9.8	3.6	159 (194)	7.5
DMS2-142-0090-30	2.4	7.7	3000	9.0	27.6	4.7	5.5	19.7	6.0	184 (219)	9.5
DMS2-142-0125-30	3.6	11.6	3000	12.5	41.4	7.1	7.7	29.5	8.2	209 (239)	11.5
DMS2-142-0160-30	4.4	13.9	3000	16.0	55.2	8.5	9.8	39.3	10.7	234 (264)	13.5
DMS2-142-0200-30 (P)	5.5	17.5	3000	20.0	69.0	10.7	12.3	49.1	13.1	259 (284)	15.5
DMS2-142-0260-30 (P)	5.9	18.9	3000	26.0	96.6	11.6	16.0	68.8	18.4	309 (329)	19.5
DMS2-142-0045-45	1.8	3.9	4500	4.5	13.8	3.6	4.1	14.7	3.6	159 (194)	7.5
DMS2-142-0090-45	3.4	7.3	4500	9.0	27.6	6.7	8.3	29.3	6.0	184 (219)	9.5
DMS2-142-0125-45 (P)	4.5	9.5	4500	12.5	41.4	8.7	11.5	44.0	8.2	209 (239)	11.5
DMS2-142-0160-45	6.0	12.7	4500	16.0	55.2	11.7	14.7	58.6	10.7	234 (264)	13.5
DMS2-142-0200-45	6.9	14.6	4500	20.0	69.0	13.4	18.4	73.3	13.1	259 (284)	15.5
DMS2-142-0260-45	6.9	14.7	4500	26.0	96.6	13.5	23.9	102.7	18.4	309 (329)	19.5

*) With brake the moment of inertia is higher by 1.66 $kgcm^2$
**) Lengths refer to encoder option 1, 3, 5 and B0: without brake (or B1: with brake); an overview of all lengths is on p. 26
***) With brake approx. 2.0 kg more weight

Dimensions DMS2-142, 4,5-26 Nm

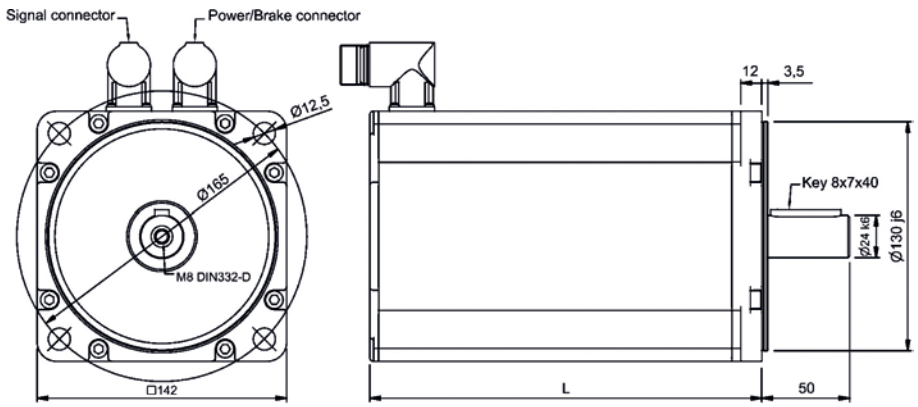

Motor characteristics DMS2-142-0045

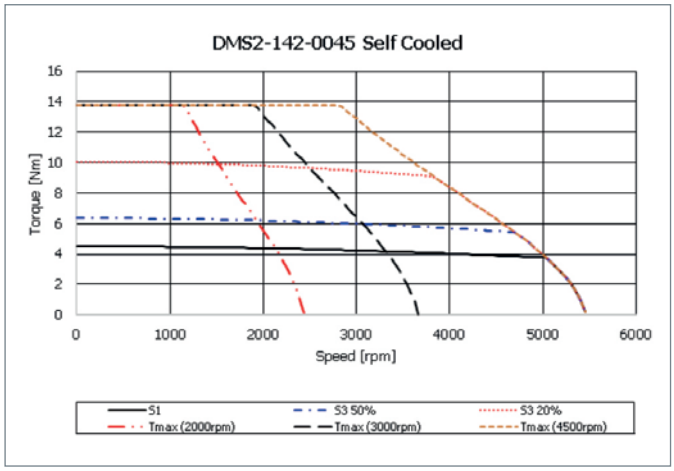

Motor characteristics DMS2-142-0090

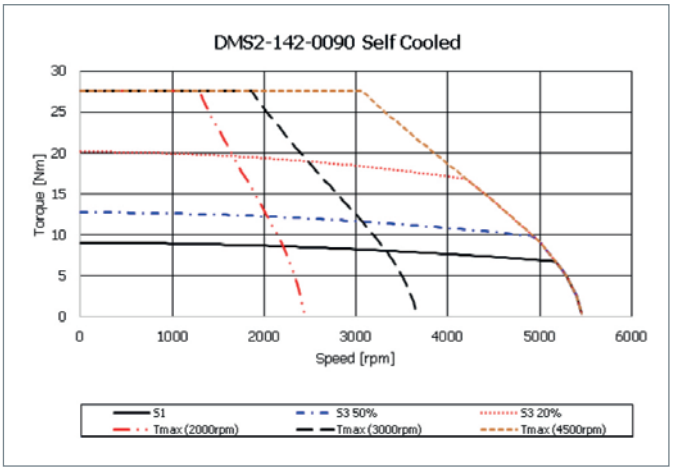

Motor characteristics DMS2-142-0125

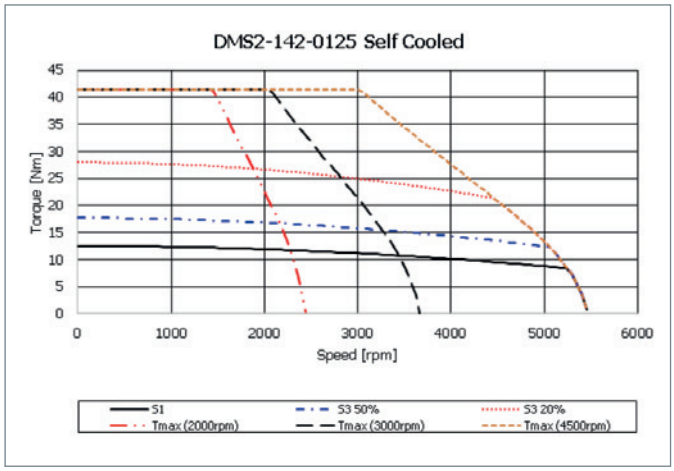

Motor characteristics DMS2-142-0160

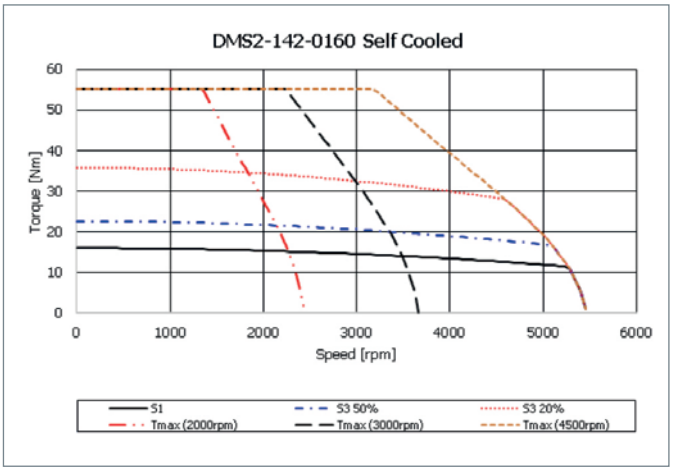

Motor characteristics DMS2-142-0200

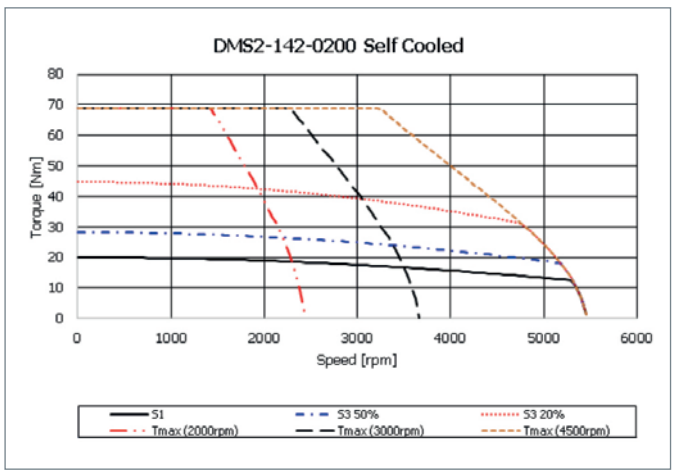

Motor characteristics DMS2-142-0260

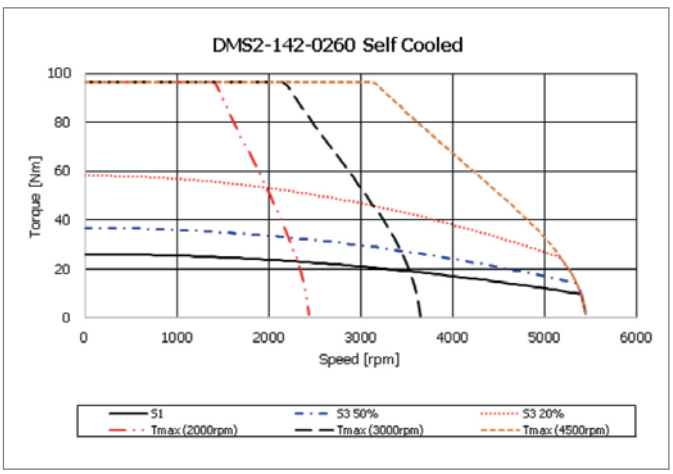

KeDrive DMS2-142
Synchronous Motors

Flange Dimension 142 mm (29 Nm – 38 Nm)											
	P_N kW	T_N Nm	n_N rpm	T_0 Nm	T_{max} Nm	I_N A_{rms}	I_0 A_{rms}	I_{max} A_{rms}	J*) $kgcm^2$	L**) mm	m***) kg
DMS2-142-0290-20	5.0	23.9	2000	29.0	110.4	9.8	11.9	52.4	20.6	338 (380)	22.5
DMS2-142-0320-20	5.3	25.5	2000	32.0	124.2	10.4	13.1	58.9	23.0	360 (402)	24.8
DMS2-142-0350-20	5.6	26.7	2000	35.0	138.0	10.9	14.3	65.5	25.5	383 (425)	27.1
DMS2-142-0380-20	5.9	28.0	2000	38.0	151.0	11.5	15.6	72.1	28.0	405 (447)	29.4
DMS2-142-0290-30	6.4	20.3	3000	29.0	110.4	12.5	17.8	78.6	20.6	338 (380)	22.5
DMS2-142-0320-30	6.8	21.8	3000	32.0	124.2	13.4	19.7	88.4	23.0	360 (402)	24.8
DMS2-142-0350-30	7.2	23.0	3000	35.0	138.0	14.1	21.5	98.3	25.5	383 (425)	27.1
DMS2-142-0380-30	7.6	24.1	3000	38.0	151.0	14.8	23.3	108.1	28.0	405 (447)	29.4
DMS2-142-0290-45	7.2	15.3	4500	29.0	110.4	14.1	26.7	117.3	20.6	338 (380)	22.5
The following motors have an M40 power connector, as shown in the drawing below.											
DMS2-142-0320-45	7.5	16.0	4500	32.0	124.2	14.7	29.5	131.9	23.0	371 (413)	24.8
DMS2-142-0350-45	7.7	16.4	4500	35.0	138.0	15.1	32.2	146.6	25.5	394 (436)	27.1
DMS2-142-0380-45	7.9	16.8	4500	38.0	151.0	15.4	34.8	161.3	28.0	416 (458)	29.4

*) With brake the moment of inertia is higher by 9.5 $kgcm^2$
**) Lengths refer to encoder option 1, 3, 5 and B0: without brake (or B1: with brake); an overview of all lengths is on p. 26
***) With brake approx. 2.5 kg more weight

Dimensions DMS2-142, 29-38 Nm

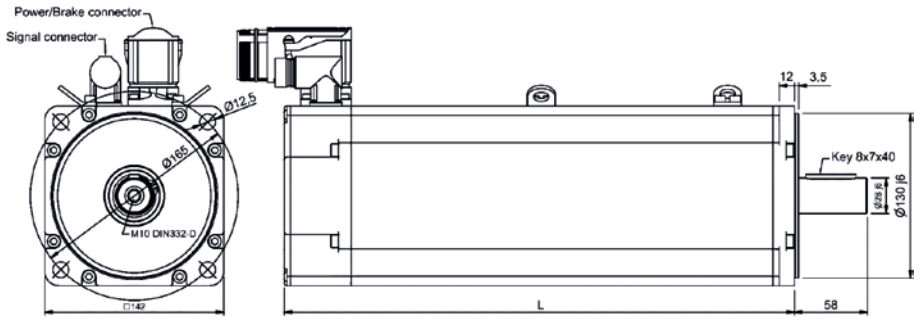

Motor characteristics DMS2-142-0290

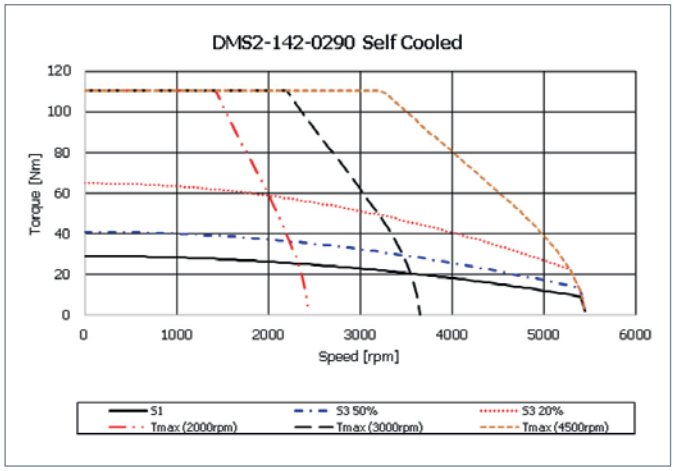

Motor characteristics DMS2-142-0320

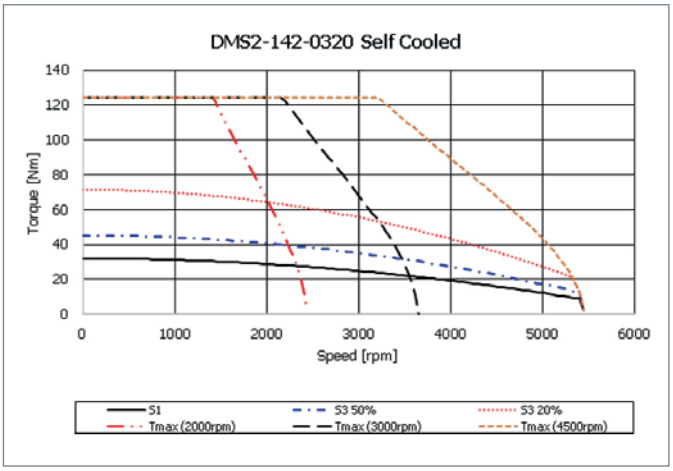

Motor characteristics DMS2-142-0350

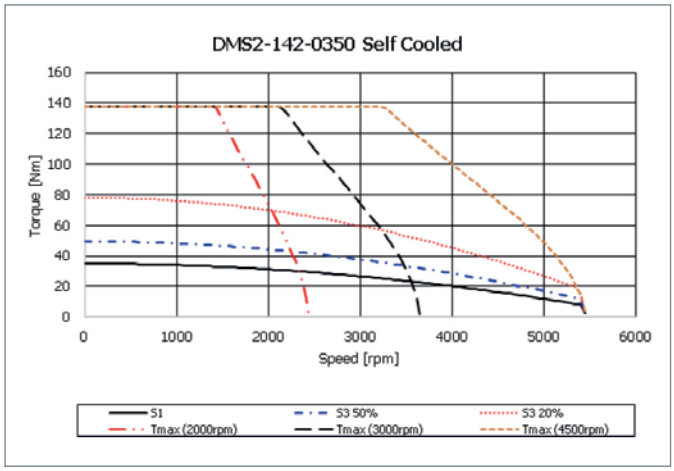

Motor characteristics DMS2-142-0380

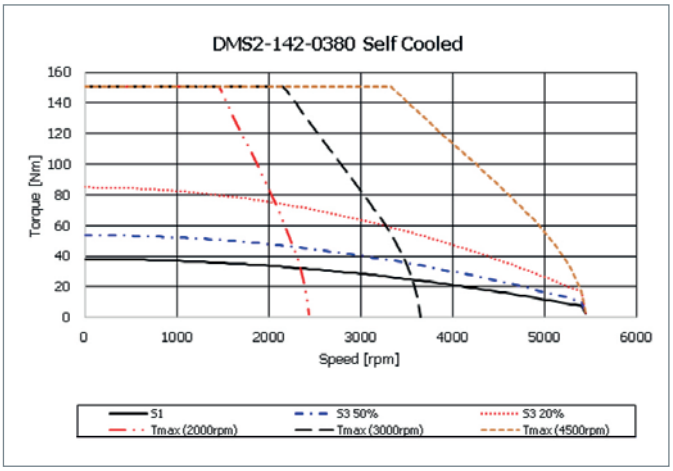

KeDrive DMS2-190
Synchronous Motors

Flange Dimension 190 mm (20-42 Nm)											
	P_N kW	T_N Nm	n_N rpm	T_0 Nm	T_{max} Nm	I_N A_{rms}	I_0 A_{rms}	I_{max} A_{rms}	J*) kgcm²	L**) mm	m***) kg
DMS2-190-0200-20	3.8	18.3	2000	20.0	75	7.5	8.2	43.7	33	195 (225)	17
DMS2-190-0280-20	5.2	24.7	2000	28.0	108	10.1	11.4	63	46	218 (248)	21
DMS2-190-0360-20	6.3	30.1	2000	36.0	144	12.3	14.7	84	60	240 (270)	25
DMS2-190-0420-20	7.6	36.1	2000	42.0	180	14.8	17.2	105	74	263 (293)	30
DMS2-190-0200-30	5.1	16.1	3000	20.0	75	9.9	12.3	65.7	33	195 (225)	17
DMS2-190-0280-30	6.9	22.0	3000	28.0	108	13.5	17.2	95	46	218 (248)	21
DMS2-190-0360-30	8.8	28.0	3000	36.0	144	17.2	22.1	126	60	240 (270)	25
DMS2-190-0420-30	10.2	32.5	3000	42.0	180	19.9	25.8	158	74	263 (293)	30

*) With brake the moment of inertia is higher by 32 kgcm²
**) Lengths refer to encoder option 1, 3, 5 and B0: without brake (or B1: with brake); an overview of all lengths is on p. 26
***) With brake approx. 5.0 kg more weight

Dimensions DMS2-190, 20-42 Nm

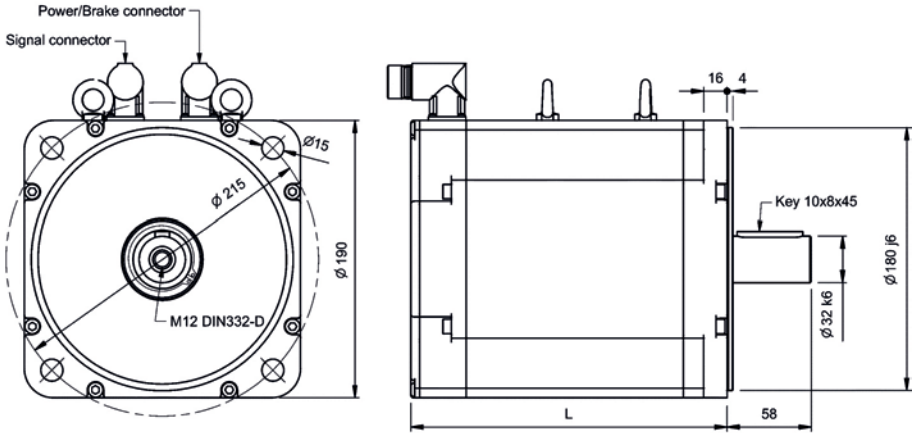

Motor characteristics DMS2-190-0200

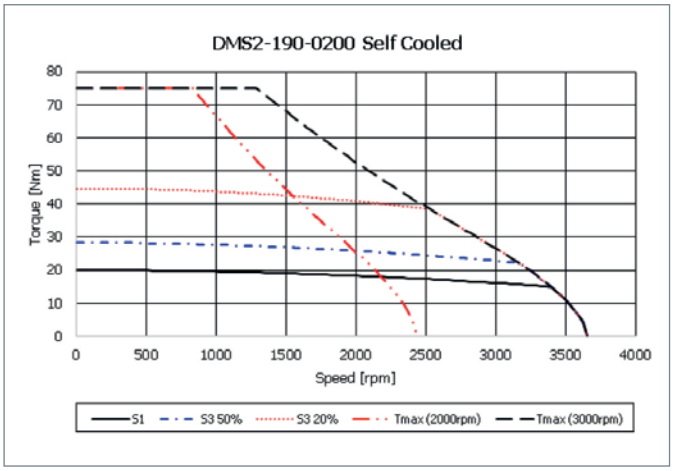

Motor characteristics DMS2-190-0280

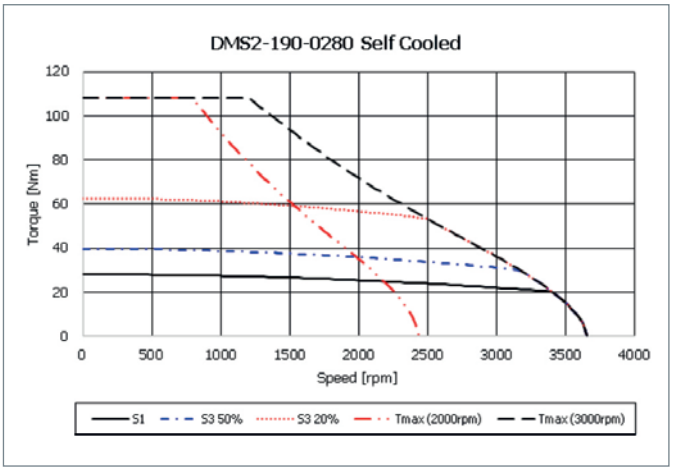

Motor characteristics DMS2-190-0360

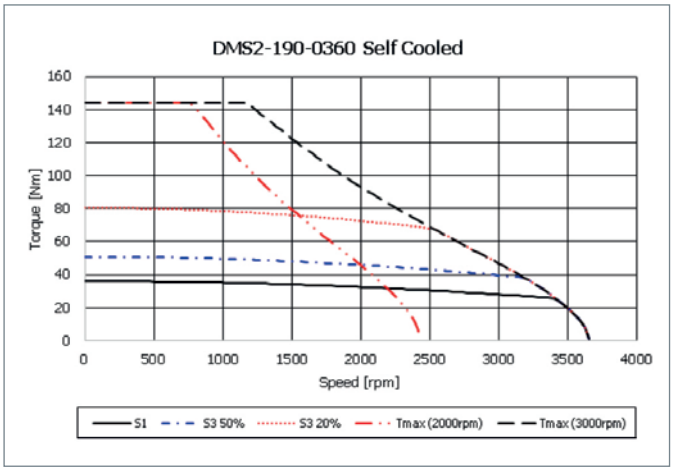

Motor characteristics DMS2-190-0420

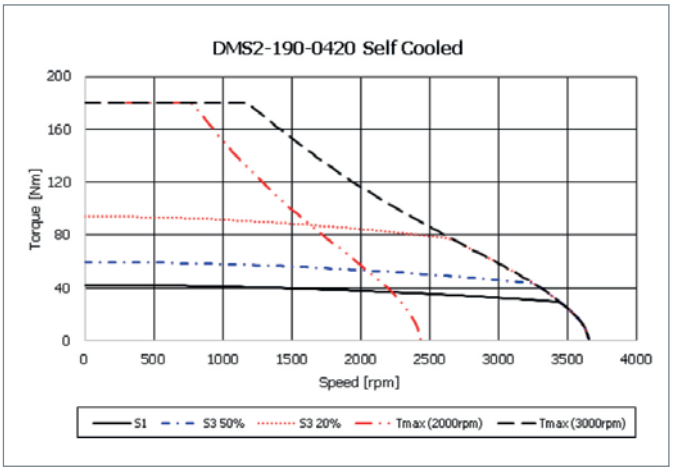

KeDrive DMS2-190
Synchronous Motors

Flange Dimension 190 mm (56-80 Nm)											
	P_N kW	T_N Nm	n_N rpm	T_0 Nm	T_{max} Nm	I_N A_{rms}	I_0 A_{rms}	I_{max} A_{rms}	J*) kgcm²	L**) mm	m***) kg
DMS2-190-0560-20	9.3	44.5	2000	56.0	230	18.2	22.9	134	102	308 (338)	38
The following motors have an M40 power connector, as shown in the drawing below.											
DMS2-190-0680-20	10.7	50.9	2000	68.0	322	20.8	27.8	188	130	369 (399)	47
DMS2-190-0800-20	12.1	57.8	2000	80.0	396	23.6	32.7	231	158	414 (444)	55
DMS2-190-0560-30	11.6	37.0	3000	56.0	230	22.7	34.4	186	102	324 (354)	38
DMS2-190-0680-30	12.8	40.9	3000	68.0	322	25.1	41.7	282	130	369 (399)	47
DMS2-190-0800-30	13.8	44.0	3000	80.0	396	27.0	49.1	347	158	414 (444)	55

*) With brake the moment of inertia is higher by 32 kgcm²
**) Lengths refer to encoder option 1, 3, 5 and B0: without brake (or B1: with brake); an overview of all lengths is on p. 26
***) With brake approx. 5.0 kg more weight

Dimensions DMS2-190, 56-80 Nm

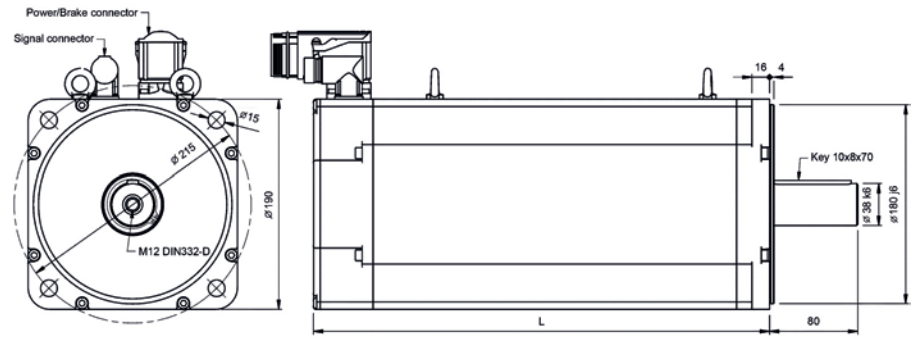

Motor characteristics DMS2-190-0560

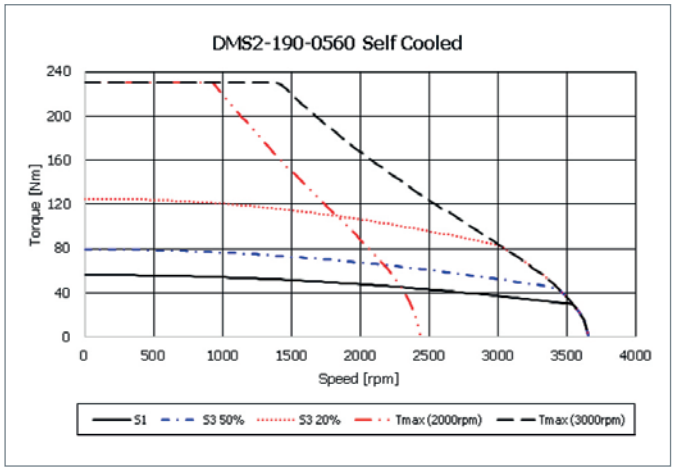

Motor characteristics DMS2-190-0680

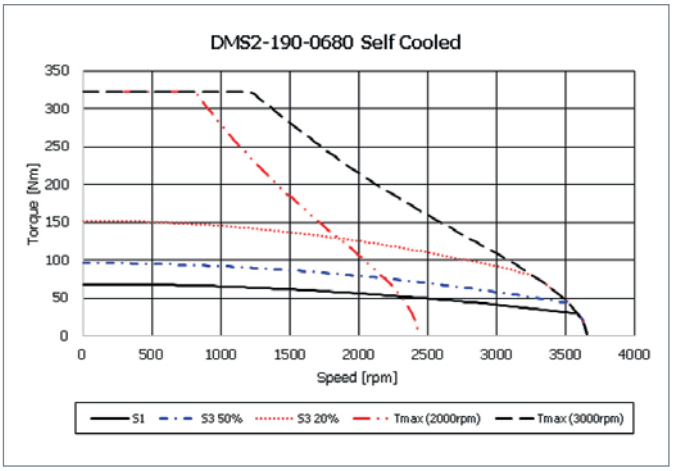

Motor characteristics DMS2-190-0800

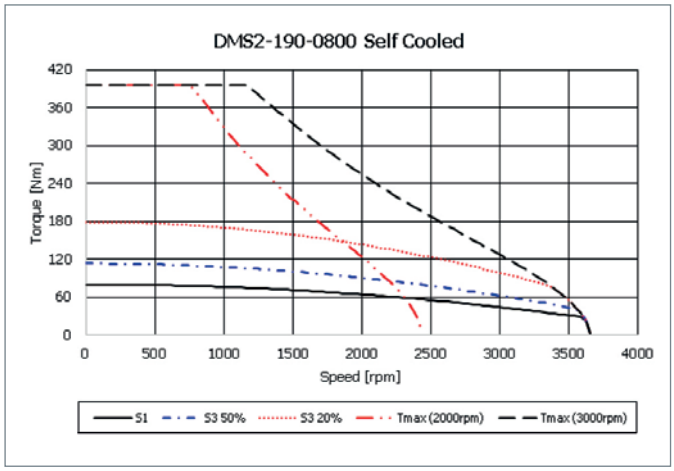

KeDrive DMS2-240
Synchronous Motors

Flange Dimension 240 mm (42 Nm – 73 Nm)											
	P_N kW	T_N Nm	n_N rpm	T_0 Nm	T_{max} Nm	I_N A_{rms}	I_0 A_{rms}	I_{max} A_{rms}	J*) $kgcm^2$	L**) mm	m***) kg
DMS2-240-0420-15	5.6	35.5	1500	42.0	120	10.9	12.9	45.2	65	321 (371)	48
DMS2-240-0580-15	7.4	47.0	1500	58.0	162	14.4	17.8	63.3	90	361 (411)	55
DMS2-240-0730-15	9.2	58.5	1500	73.0	204	17.9	22.4	81.4	114	401 (451)	62
DMS2-240-0420-20	6.8	32.5	2000	42.0	120	13.3	17.2	60.3	65	321 (371)	48
DMS2-240-0580-20	9.0	43.0	2000	58.0	162	17.6	23.7	84.4	90	361 (411)	55
DMS2-240-0730-20****	11.2	53.5	2000	73.0	204	21.9	29.9	108.5	114	401 (451)	62
DMS2-240-0420-30	8.6	27.5	3000	42.0	120	16.9	25.8	90.4	65	321 (371)	48
DMS2-240-0580-30****	12.0	38.2	3000	58.0	162	23.4	35.6	126.6	90	361 (411)	55
DMS2-240-0730-30****	15.4	48.9	3000	73.0	204	30.0	44.8	162.8	114	401 (451)	62

*) With brake the moment of inertia is higher by 52.87 $kgcm^2$
**) Lengths refer to options 1: Hiperface SKM36/SKS36 and B0: without brake (or B1: with brake); an overview of all lengths is on p. 26
***) With brake approx. 7.0 kg more weight
****) The following motors have an M40 power connector, as shown in the drawing below

Dimensions DMS2-240, 42-73 Nm

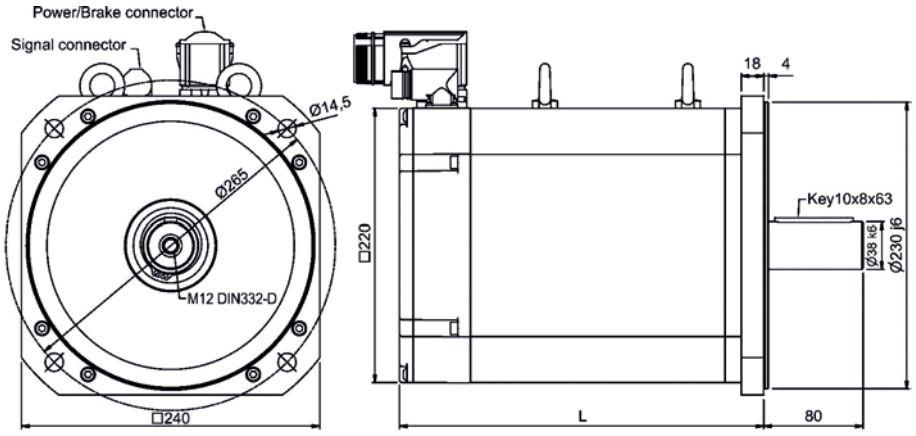

Motor characteristics DMS2-240-0420

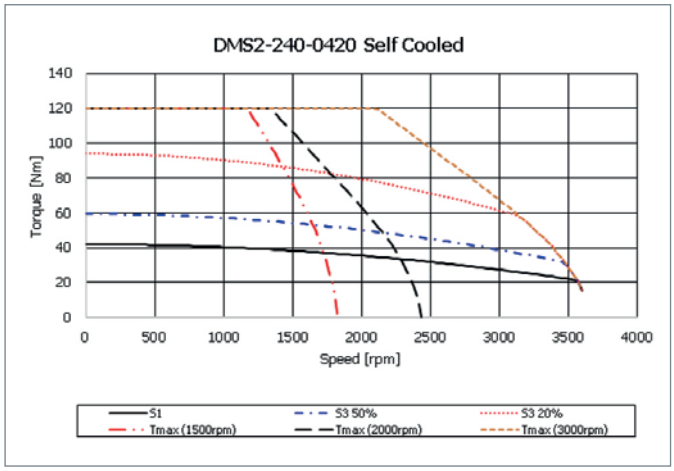

Motor characteristics DMS2-240-0580

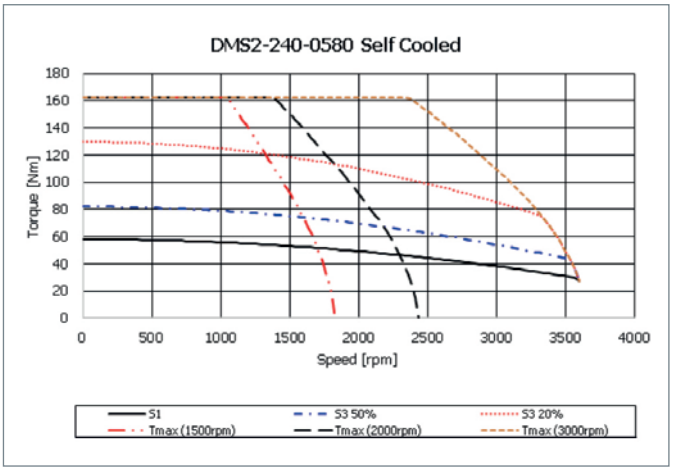

Motor characteristics DMS2-240-0730

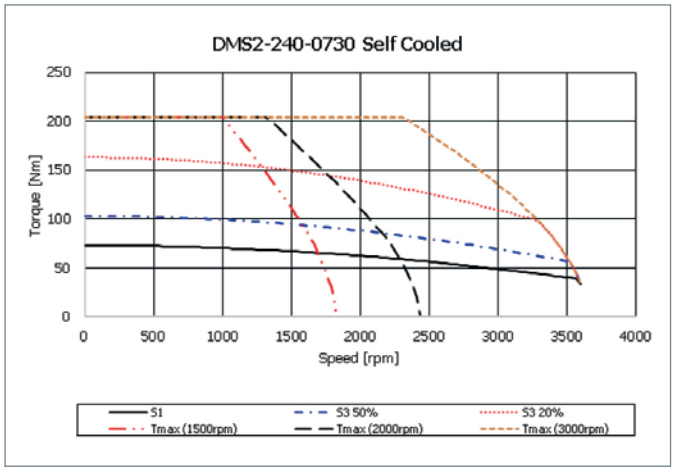

KeDrive DMS2-240
Synchronous Motors

Flange Dimension 240 mm (81 Nm – 120 Nm)											
	P_N kW	T_N Nm	n_N rpm	T_0 Nm	T_{max} Nm	I_N A_{rms}	I_0 A_{rms}	I_{max} A_{rms}	J*) $kgcm^2$	L**) mm	m***) kg
DMS2-240-0810-15	10.2	65.0	1500	81.0	231	19.9	24.8	90.5	126	421 (471)	67
DMS2-240-0980-15	12.2	77.5	1500	98.0	280	23.8	30.1	108.5	150	461 (511)	76
DMS2-240-1200-15	14.8	94.5	1500	120.0	345	29.0	36.8	135.7	192	521 (571)	92
DMS2-240-0810-20	12.6	60.0	2000	81.0	231	24.6	33.1	120.6	126	421 (471)	67
DMS2-240-0980-20	15.2	72.5	2000	98.0	280	29.7	40.1	144.7	150	461 (511)	76
DMS2-240-1200-20	17.9	85.5	2000	120.0	345	35.0	49.1	180.9	192	521 (571)	92
DMS2-240-0810-30	16.8	53.5	3000	81.0	231	32.8	49.7	180.9	126	421 (471)	67
DMS2-240-0980-30	19.0	60.5	3000	98.0	280	37.1	60.1	217.1	150	461 (511)	76
DMS2-240-1200-30	21.0	67.0	3000	120.0	345	41.1	73.6	271.3	192	521 (571)	92

*) With brake the moment of inertia is higher by 52.87 $kgcm^2$
**) Lengths refer to options 1: Hiperface SKM36/SKS36 and B0: without brake (or B1: with brake); an overview of all lengths is on p. 26
***) With brake approx. 7.0 kg more weight

Dimensions DMS2-240, 81-120 Nm

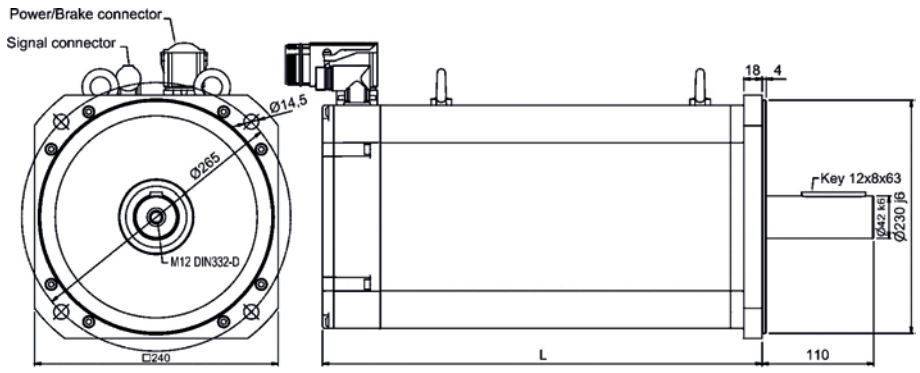

Motor characteristics DMS2-240-0810

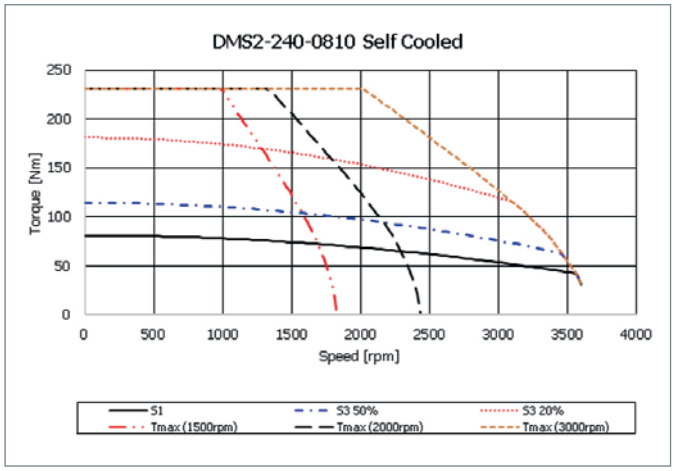

Motor characteristics DMS2-240-0980

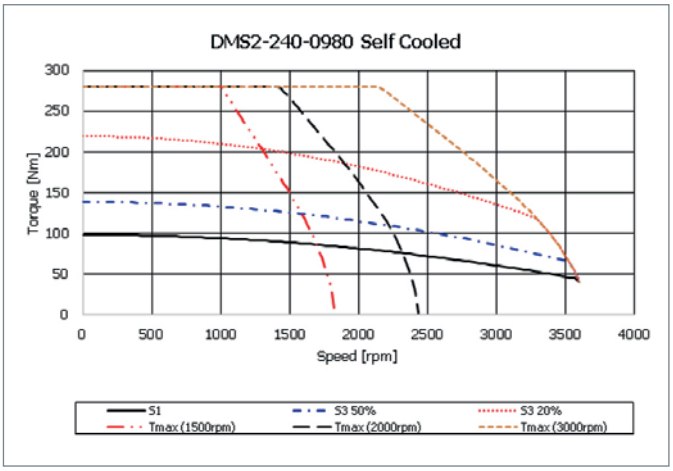

Motor characteristics DMS2-240-1200

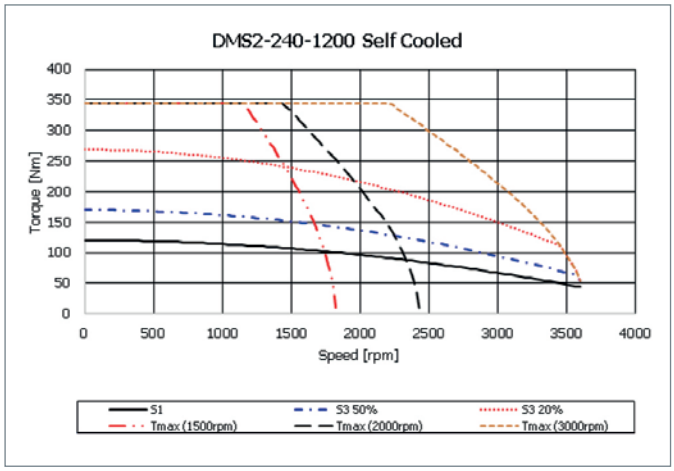

KeDrive DMS2-270
Synchronous Motors

Flange Dimension 270 mm											
	P_N kW	T_N Nm	n_N rpm	T_0 Nm	T_{max} Nm	I_N A_{rms}	I_0 A_{rms}	I_{max} A_{rms}	J*) $kgcm^2$	L**) mm	m***) kg
DMS2-270-1400-15	17.3	110	1500	140	475	33.8	43.0	185	290	450 (530)	122.5
DMS2-270-1800-15	22.0	140	1500	180	650	43.0	55.3	253	373	510 (590)	143.5
DMS2-270-2400-15	28.7	183	1500	240	900	56.2	73.7	350	497	600 (680)	176.5
DMS2-270-3000-15	36.0	229	1500	300	1150	70.3	92.1	447	622	690 (770)	208.5
DMS2-270-1400-20	18.0	86	2000	140	475	35.2	57.3	249	290	450 (530)	122.5
DMS2-270-1800-20	24.1	115	2000	180	650	47.1	73.7	337	373	510 (590)	143.5
DMS2-270-2400-20	31.0	148	2000	240	900	60.6	98.3	466	497	600 (680)	176.5
DMS2-270-3000-20	40.0	191	2000	300	1150	78.2	122.8	596	622	690 (770)	208.5
DMS2-270-1400-30	14.1	45	3000	140	475	27.6	86.0	374	290	450 (530)	122.5
DMS2-270-1800-30	21.7	69	3000	180	650	42.4	110.6	511	373	510 (590)	143.5
DMS2-270-2400-30	27.6	88	3000	240	900	54.0	147.4	708	497	600 (680)	176.5
DMS2-270-3000-25	39.3	150	2500	300	1150	76.6	153.3	752	622	690 (770)	208.5

*) With brake the moment of inertia is higher by 52.87 $kgcm^2$
**) Lengths refer to options 1: Hiperface SKM36/SKS36 and B0: without brake (or B1: with brake); an overview of all lengths is on p. 26
***) With brake approx. 7.0 kg more weight

Dimensions DMS2-270

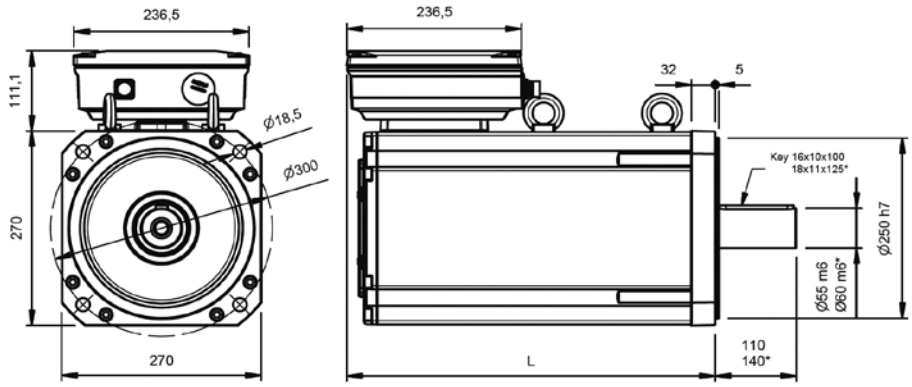

*) Dimensions valid for DMS2-270-3000

Motor characteristics DMS2-270-1400

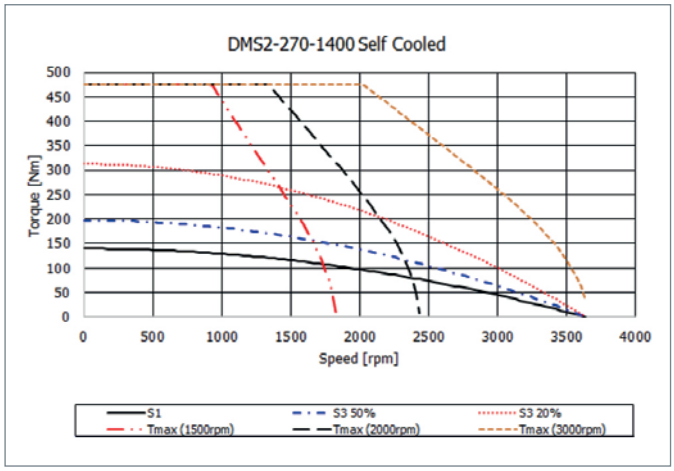

Motor characteristics DMS2-270-1800

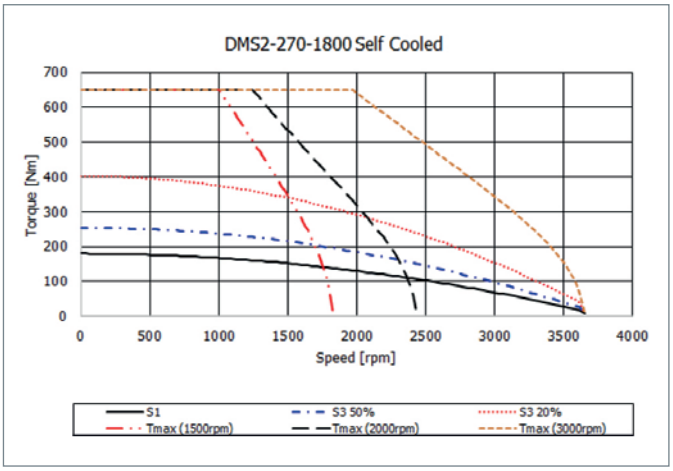

Motor characteristics DMS2-270-2400

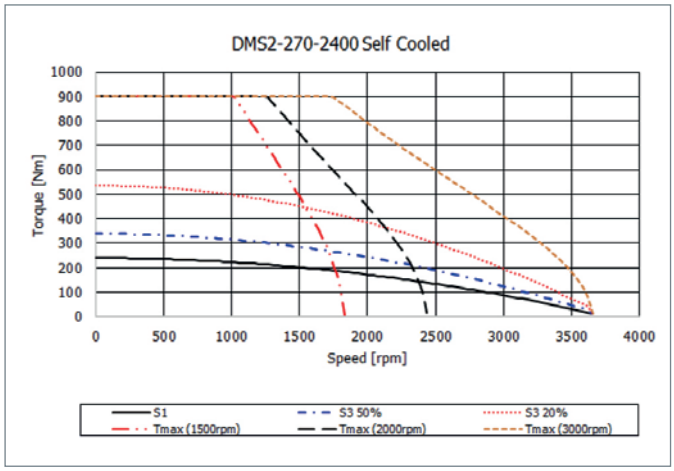

Motor characteristics DMS2-270-3000

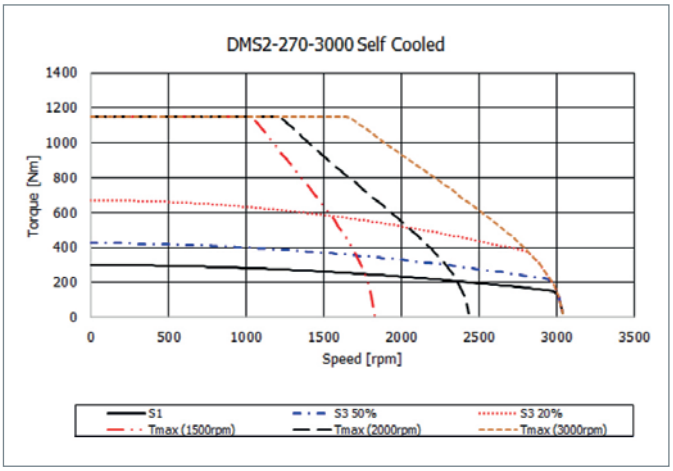

KeDrive DMS2
Overview Motor Lengths

	B0: WITHOUT brake		B1: WITH brake	
Encoder System	3: Hiperface DSL EEM37/EES37	9: Resolver	3: Hiperface DSL EEM37/EES37	9: Resolver
DMS2-040-0003	102.5	94	125.5	117

Encoder System	1: Hiperface SKM36/SKS36 3: Hiperface DSL EEM37/EES37 5: Hiperface DSL EKM36/EKS36	9: Resolver	1: Hiperface SKM36/SKS36 3: Hiperface DSL EEM37/EES37 5: Hiperface DSL EKM36/EKS36	9: Resolver
DMS2-058-0002	106.5	86.5	136.5	116.5
DMS2-058-0005	118.5	98.5	148.5	128.5
DMS2-058-0007	130.5	110.5	160.5	140.5
DMS2-058-0010	142.5	122.5	172.5	152.5
DMS2-058-0012	154.5	134.5	184.5	164.5
DMS2-070-0006	122.5	112.0	157.5	147.0
DMS2-070-0012	137.5	127.0	172.5	162.0
DMS2-070-0018	152.5	142.0	187.5	177.0
DMS2-070-0024	179.5	167.0	210.5	198.0
DMS2-070-0030	194.5	182.0	225.5	213.0
DMS2-091-0013	136.5	122.0	171.5	157.0
DMS2-091-0026	159.0	144.5	194.0	179.5
DMS2-091-0035	174.0	159.5	209.0	194.5
DMS2-091-0045	194.0	179.5	229.0	214.5
DMS2-100-0040	161.0	150.0	193.0	182.0
DMS2-100-0060	181.0	170.0	213.0	202.0
DMS2-100-0080	205.0	194.0	237.0	226.0
DMS2-100-0100	225.0	214.0	257.0	246.0
DMS2-142-0045	159.0	148.0	194.0	183.0
DMS2-142-0090	184.0	173.0	219.0	208.0
DMS2-142-0125	209.0	198.0	239.0	228.0
DMS2-142-0160	234.0	223.0	264.0	253.0
DMS2-142-0200	259.0	248.0	284.0	273.0
DMS2-142-0260	309.0	298.0	329.0	318.0
DMS2-142-0290	337.5	337.5	379.5	379.5
DMS2-142-0320*	360.0	360.0	402.0	402.0
DMS2-142-0350*	382.5	382.5	424.5	424.5
DMS2-142-0380*	405.0	405.0	447.0	447.0

* +11 mm at 4500 rpm nominal speed

	B0: WITHOUT brake		B1: WITH brake	
Encoder System	1: Hiperface SKM36/SKS36 3: Hiperface DSL EEM37/EES37 5: Hiperface DSL EKM36/EKS36	9: Resolver	1: Hiperface SKM36/SKS36 3: Hiperface DSL EEM37/EES37 5: Hiperface DSL EKM36/EKS36	9: Resolver
DMS2-190-0200	195	195	225	225
DMS2-190-0280	218	218	248	248
DMS2-190-0360	240	240	270	270
DMS2-190-0420	263	263	293	293
DMS2-190-0560-20	308	308	338	338
DMS2-190-0560-30	324	324	354	354
DMS2-190-0680	369	369	399	399
DMS2-190-0800	414	414	444	444

Encoder System	1: Hiperface SKM36/SKS36	9: Resolver	1: Hiperface SKM36/SKS36	9: Resolver
DMS2-240-0420	321	293	371	343
DMS2-240-0580	361	333	411	383
DMS2-240-0730	401	373	451	423
DMS2-240-0810	421	393	471	443
DMS2-240-0980	461	433	511	483
DMS2-240-1200	521	493	571	543

DMS2-270-1400	450	438	530	518
DMS2-270-1800	510	498	590	578
DMS2-270-2400	600	588	680	668
DMS2-270-3000	690	678	770	758

Dimensions in mm

Copyright © (2023) KEBA Industrial Automation GmbH 2023_01_EN. We reserve the right to make alterations in line with technical progress. Data provided without guarantee. All rights reserved.

KEBA Industrial Automation GmbH
Reindlstraße 51, 4040 Linz/Austria, Phone +43 732 7090-0, keba@keba.com

KEBA Group worldwide
Austria / China / Czech Republic / Germany / India / Italy / Japan / Netherlands
Romania / Serbia / South Korea / Switzerland / Taiwan / Turkey / United Kingdom / USA

www.keba.com

Automation by innovation.